DOCKET

SUPREME COURT
OF THE UNITED STATES

No. 12-1163
Title: Highmark Inc., Petitioner
v.
Allcare Health Management System, Inc.
Docketed: March 25, 2013
Linked with 12A763
Lower Ct: United States Court of Appeals for the Federal Circuit
Case Nos.: (2011-1219)
Decision Date: August 7, 2012
Rehearing Denied: December 6, 2012
Questions Presented

~~Date~~~	~~~~~~~Proceedings and Orders~~~~~~~~~~~~~~~~~~~~
Jan 31 2013	Application (12A763) to extend the time to file a petition for a writ of certiorari from March 6, 2013 to April 5, 2013, submitted to The Chief Justice.
Feb 4 2013	Application (12A763) granted by The Chief Justice extending the time to file until April 5, 2013.
Mar 25 2013	Petition for a writ of certiorari filed. (Response due April 24, 2013)
Apr 24 2013	Brief amicus curiae of Blue Cross Blue Shield Association filed.
May 7 2013	DISTRIBUTED for Conference of May 23, 2013.
May 14 2013	Response Requested . (Due June 13, 2013)
Jun 13 2013	Brief of respondent Allcare Health Management Systems, Inc. in opposition filed.
Jun 25 2013	Reply of petitioner Highmark Inc. filed.
Jun 26 2013	DISTRIBUTED for Conference of September 30, 2013.
Oct 1 2013	Petition GRANTED.
Nov 7 2013	The time to file the joint appendix and petitioner's brief on the merits is extended to and including December 2, 2013.
Nov 7 2013	The time to file respondent's brief on the merits is extended to and including January 17, 2014.
Nov 8 2013	Consent to the filing of amicus curiae briefs, in support of either party or of neither party, received from counsel for the petitioner.
Nov 25 2013	SET FOR ARGUMENT ON Wednesday, February 26, 2014
Dec 2 2013	Joint appendix filed (2 volumes and supplemental volume). (Statement of costs received)
Dec 2 2013	Brief of petitioner Highmark Inc. filed.

Dec 4 2013	Record received from U.S.C.A. Federal Circuit. (1 Box)
Dec 9 2013	Brief amicus curiae of American Intellectual Property Law Association in support of neither party filed.
Dec 9 2013	Brief amicus curiae of the United States filed.
Dec 9 2013	Brief amici curiae of Google Inc., et al. filed. VIDED (see 12-1184).
Dec 9 2013	Brief amicus curiae of Apple Inc. in support of neither party filed. VIDED (see 12-1184).
Dec 9 2013	Brief amici curiae of Yahoo! Inc., et al filed. VIDED (see 12-1184).
Dec 9 2013	Brief amicus curiae of Blue Cross Blue Shield Association filed.
Dec 9 2013	Brief amicus curiae of New York Intellectual Property Law Association in support of neither party filed.
Dec 12 2013	Consent to the filing of amicus curiae briefs, in support of either party or of neither party, received from counsel for the respondent. VIDED.
Dec 20 2013	CIRCULATED.
Dec 23 2013	Motion of the Solicitor General for leave to participate in oral argument as amicus curiae and for divided argument filed.
Jan 8 2014	Record received from U.S.D.C. Northern District of Texas (Fort Worth). (7 Boxes), (2 CD's) All records in the 7 boxes are SEALED. The 2 CD's are electronic.
Jan 17 2014	Brief of respondent Allcare Health Management System, Inc. filed. (Distributed)
Jan 24 2014	Brief amicus curiae of BSA I The Software Alliance filed. (Distributed)
Jan 24 2014	Brief amicus curiae of Intellectual Property Owners Association filed. (Distributed)
Jan 24 2014	Brief amicus curiae of Boston Patent Law Association. filed. (Distributed)
Jan 27 2014	Motion of the Solicitor General for leave to participate in oral argument as amicus curiae and for divided argument GRANTED.
Feb 10 2014	Reply of petitioner Highmark Inc. filed. (Distributed)
Feb 26 2014	Argued. For petitioner: Neal K. Katyal, Washington, D. C.; and Brian H. Fletcher, Assistant to the Solicitor General, Department of Justice, Washington, D. C. (for United States, as amicus curiae.) For respondent: Donald R. Dunner, Washington, D. C.
Apr 29 2014	Judgment VACATED and case REMANDED. Sotomayor, J., delivered the opinion for a unanimous Court.

PETITION FOR WRIT OF CERTIORARI

12-1163

No. 12-

IN THE
Supreme Court of the United States

HIGHMARK INC.,

Petitioner,

v.

ALLCARE HEALTH MANAGEMENT SYSTEMS, INC.,

Respondent.

On Petition for a Writ of Certiorari to the United States Court of Appeals for the Federal Circuit

PETITION FOR A WRIT OF CERTIORARI

CYNTHIA E. KERNICK
JAMES C. MARTIN
KIM M. WATTERSON
KEVIN S. KATONA
THOMAS M. POHL
REED SMITH LLP
225 Fifth Avenue
Pittsburgh, PA 15222
(412) 288-3131

NEAL KUMAR KATYAL*
DOMINIC F. PERELLA
HOGAN LOVELLS US LLP
555 13th Street, N.W.
Washington, D.C. 20004
(202) 637-5528
neal.katyal@hoganlovells.com

Counsel for Petitioner
**Counsel of Record*

WILSON-EPES PRINTING CO., INC. – (202) 789-0096 – WASHINGTON, D. C. 20002

QUESTION PRESENTED

The Patent Act provides that a "court in exceptional cases may award reasonable attorney fees to the prevailing party." 35 U.S.C. § 285. A case is "exceptional" if it is objectively baseless and brought in bad faith. After living with this case for more than six years, the District Court found that it was objectively baseless and brought in bad faith, and it awarded fees. Over a strong dissent, a Federal Circuit panel reversed, holding that a district court's objective baselessness determination is reviewed "without deference." Pet. App. 9a. The Federal Circuit denied rehearing *en banc* by a vote of six to five. One of the two pointed dissents from that denial accurately observed that the decision below "deviates from precedent * * * and establishes a review standard for exceptional case findings in patent cases that is squarely at odds with the highly deferential review adopted by every regional circuit and the Supreme Court in other areas of law." Pet. App. 191a.

The question presented is: Whether a district court's exceptional-case finding under 35 U.S.C. § 285, based on its judgment that a suit is objectively baseless, is entitled to deference.

PARTIES TO THE PROCEEDINGS

The following were parties to the proceedings in the U.S. Court of Appeals for the Federal Circuit:

1. Highmark Inc., the petitioner on review, was plaintiff-appellee below.

2. Allcare Health Management Systems, Inc., respondent on review, was defendant-appellant below.

RULE 29.6 DISCLOSURE STATEMENT

Petitioner Highmark Inc. has no parent corporation, and no publicly held company owns ten percent or more of its stock.

TABLE OF CONTENTS

QUESTION PRESENTED i
PARTIES TO THE PROCEEDINGS ii
RULE 29.6 DISCLOSURE STATEMENT iii
TABLE OF AUTHORITIES vi
OPINIONS BELOW 1
JURISDICTION 1
STATUTE INVOLVED 2
INTRODUCTION 2
STATEMENT 5
A. Background 5
B. The Exceptional-Case Finding 7
C. The Federal Circuit's Decision 9
D. The *En Banc* Dissent 11
REASONS FOR GRANTING THE PETITION 13
I. THE DECISION BELOW CANNOT BE RECONCILED WITH THIS COURT'S PRECEDENTS 14
II. THE DECISION BELOW CREATES BOTH AN INTRA-CIRCUIT AND INTER-CIRCUIT SPLIT 22
III. THE QUESTION PRESENTED IS IMPORTANT TO PATENT LAW AND THE PRESERVATION OF THE PROPER ROLES OF TRIAL AND APPELLATE COURTS 26
CONCLUSION 31

TABLE OF CONTENTS—Continued

APPENDICES

APPENDIX A: Opinion of the U.S. Court of Appeals for the Federal Circuit, dated August 7, 2012 ..... 1a

APPENDIX B: Opinion and Order of the District Court Granting Motion for Exceptional-Case Finding and Attorneys' Fees, dated April 1, 2010 ..... 44a

APPENDIX C: Order of the District Court Granting Motions to Reconsider, dated May 6, 2010 ..... 97a

APPENDIX D: Opinion and Order of the District Court Reconsidering and Vacating Sanctions, dated Aug. 9, 2010 ..... 103a

APPENDIX E: Order of the District Court Awarding Attorneys' Fees, dated Nov. 5, 2010 ..... 153a

APPENDIX F: Order of the District Court Denying Motion To Alter or Amend the Judgment or for a New Trial, dated Jan. 18, 2011 ..... 171a

APPENDIX G: Order of the U.S. Court of Appeals for the Federal Circuit Denying Panel Rehearing and Rehearing *En Banc*, dated Dec. 6, 2012 ..... 179a

TABLE OF AUTHORITIES

Page

CASES:

ALPO Petfoods, Inc. v. *Ralston Purina Co.*,
913 F.2d 958 (D.C. Cir. 1990) 24

American Safety Table Co. v. *Schreiber*,
415 F.2d 373 (2d Cir. 1969) 25

Anderson v. *City of Bessemer City*,
470 U.S. 564 (1985) 10, 30

Badalamenti v. *Dunham's, Inc.*,
896 F.2d 1359 (Fed. Cir. 1990) 19

Bard Peripheral Vascular, Inc. v.
W.L. Gore & Assocs., Inc.,
682 F.3d 1003 (Fed. Cir. 2012) 30

Bilski v. *Kappos*,
130 S. Ct. 3218 (2010) 5

Blue Dane Simmental Corp. v. *American Simmental Ass'n*,
178 F.3d 1035 (8th Cir. 1999) 24

Bolt, Beranek & Newman, Inc. v.
McDonnell Douglas Corp.,
521 F.2d 338 (8th Cir. 1975) 25

Brooks Furniture Mfg., Inc. v.
Dutailier Int'l, Inc.,
393 F.3d 1378 (Fed. Cir. 2005) 7

Codex Corp. v. *Milgo Elec. Corp.*,
717 F.2d 622 (1st Cir. 1983) 25

Columbia Pictures Indus., Inc. v.
Prof'l Real Estate Investors, Inc.,
944 F.2d 1525 (9th Cir. 1991) 21

TABLE OF AUTHORITIES—Continued

Page

Computer Docking Station Corp. v. *Dell, Inc.*, 519 F.3d 1366 (Fed. Cir. 2008) 22

Cooter & Gell v. *Hartmax Corp.*, 496 U.S. 384 (1990) ..... *passim*

Cybor Corp. v. *FAS Techs., Inc.*, 138 F.3d 1448 (Fed. Cir. 1998) 3, 22, 28, 30

eBay Inc. v. *MercExchange, LLC*, 547 U.S. 388 (2006) 4, 26

Employers Council On Flexible Comp. v. *Feltman*, 384 F. App'x 201 (4th Cir. 2010) 24

Eon-Net LP v. *Flagstar Bancorp*, 653 F.3d 1314 (Fed. Cir. 2011), *cert. denied*, 132 S. Ct. 2391 (2012) 22

Farberware Licensing Co. v. *Meyer Mktg. Co.*, 428 F. App'x 97 (2d Cir. 2011) 24

Festo Corp. v. *Shoketsu Kinzoku Kogyo Kabushiki Co., Ltd.*, 535 U.S. 722 (2002) 13, 23

FilmeTec Corp. v. *Hydranautics*, 67 F.3d 931 (Fed. Cir. 1995) 19, 28

Frank's Casing Crew & Rental Tools, Inc. v. *Weatherford Int'l, Inc.*, 389 F.3d 1370 (Fed. Cir. 2004) 19

TABLE OF AUTHORITIES—Continued

Page

Garrett Corp. v. *American Safety Flight Sys., Inc.*, 502 F.2d 9 (5th Cir. 1974) 25

Highmark, Inc. v. *Allcare Health Mgmt. Sys., Inc.*, 329 F. App'x 280 (Fed. Cir. 2009) 7

Johnson v. *Jones*, 149 F.3d 494 (6th Cir. 1998) 24

Kale v. *Combined Ins. Co.*, 861 F.2d 746 (1st Cir. 1988) 29

Kearney & Trecker Corp. v. *Cincinnati Milacron Inc.*, 562 F.2d 365 (6th Cir. 1977) 25

KSR Int'l Co. v. *Teleflex Inc.*, 550 U.S. 398 (2007) 14

Lam, Inc. v. *Johns-Manville Corp.*, 668 F.2d 462 (10th Cir. 1982) 25

Loctite Corp. v. *Fel-Pro, Inc.*, 667 F.2d 577 (7th Cir. 1981) 25

Lucent Techs., Inc. v. *Gateway, Inc.*, 580 F.3d 1301 (Fed. Cir. 2009) 6

Maurice A. Garbell, Inc. v. *Boeing Co.*, 546 F.2d 297 (9th Cir. 1976) 25

Mayo Collaborative Servs. v. *Prometheus Labs., Inc.*, 132 S. Ct. 1289 (2012) 5

TABLE OF AUTHORITIES—Continued

Page

Medtronic Navigation, Inc. v. *BrainLAB Medizinische Computersysteme GmbH*, 603 F.3d 943 (Fed. Cir. 2010) 27

Merck & Co. v. *Teva Pharmaceuticals USA, Inc.*, 395 F.3d 1364 (Fed. Cir. 2005) 30

Microsoft Corp. v. *i4i Ltd. P'ship*, 131 S. Ct. 2238 (2011) 19

Miller v. *Fenton*, 474 U.S. 104 (1985) 15

Nat'l Ass'n of Prof'l Baseball Leagues, Inc. v. *Very Minor Leagues, Inc.*, 223 F.3d 1143 (10th Cir. 2000) 24

Nat'l Bus. Forms & Printing, Inc. v. *Ford Motor Co.*, 671 F.3d 526 (5th Cir. 2012) 24

Nilssen v. *Osram Sylvania, Inc.*, 528 F.3d 1352 (Fed. Cir. 2008) 22

Old Reliable Wholesale, Inc. v. *Cornell Corp.*, 635 F.3d 539 (Fed. Cir. 2011) 7, 15

Omark Indus., Inc. v. *Colonial Tool Co.*, 672 F.2d 362 (3d Cir. 1982) 25

Pierce v. *Underwood*, 487 U.S. 552 (1987) ..... *passim*

Professional Real Estate Investors, Inc. v. *Columbia Pictures Indus., Inc.*, 508 U.S. 49 (1993) 20, 21, 29

TABLE OF AUTHORITIES—Continued

Page

Pullman-Standard v. *Swint*,
456 U.S. 273 (1982) 20

Salve Regina College v. *Russell*,
499 U.S. 225 (1991) 13

Secalt S.A. v. *Wuxi Shenxi Constr. Mach. Co.*,
668 F.3d 677 (9th Cir. 2012) 24

Securacomm Consulting, Inc. v. *Securacom Inc.*,
224 F.3d 273 (3d Cir. 2000) 24

Sitrick v. *Dreamworks, LLC*,
516 F.3d 993 (Fed. Cir. 2008) 30

Slip Track Sys., Inc. v. *Metal-Lite, Inc.*,
304 F.3d 1256 (Fed. Cir. 2002) 30

Stewart v. *Sonneborn*,
98 U.S. 187 (1878) 21

Stone v. *Crocker*,
41 Mass. 81 (1832) 21

Tamko Roofing Prods., Inc. v. *Ideal Roofing Co.*,
282 F.3d 23 (1st Cir. 2002) 24

TE-TA-MA Truth Found.-Family of URI, Inc. v. *World Church of the Creator*,
392 F.3d 248 (7th Cir. 2004) 24

Tire Kingdom, Inc. v. *Morgan Tire & Auto, Inc.*,
253 F.3d 1332 (11th Cir. 2001) 24

TABLE OF AUTHORITIES—Continued

Page

Warner-Jenkinson Co. v. *Hilton Davis Chem. Co.*, 520 U.S. 17 (1997) 13, 23

Western Elec. Co. v. *Stewart-Warner Corp.*, 631 F.2d 333 (4th Cir. 1980) 25

Wolverine World Wide, Inc. v. *Nike, Inc.*, 38 F.3d 1192 (Fed. Cir. 1994) 6

Young v. *Lumenis, Inc.*, 492 F.3d 1336 (Fed. Cir. 2007) 30

STATUTES:

15 U.S.C. § 1117(a)(3) 24

28 U.S.C. § 1254(1) 1

28 U.S.C. § 1927 23

28 U.S.C. § 2412(d) 14

35 U.S.C. § 285 ..... *passim*

RULES:

Fed. R. Civ. P. 11 ..... *passim*

Fed. R. Civ. P. 11(b) 17

Fed. R. Civ. P. 52(a)(6) 19, 20

OTHER AUTHORITIES:

J. Allison *et al.*, *Patent Quality and Settlement Among Repeat Patent Litigants*, 99 Geo. L. J. 677 (2011) 26

Am. Intellectual Property Law Ass'n, *Report of the Economic Survey 2011* 27

TABLE OF AUTHORITIES—Continued

Page

J. Bessen & M. Meurer, *The Direct Costs from NPE Disputes* (Boston Univ. Sch. of Law Working Paper No. 12-34, 2012) 27

C. Chien, *Patent Trolls by the Numbers*, Patently-O, Mar. 14, 2013 26

E. Gressman *et al.*, *Supreme Court Practice* (9th ed. 2007) 23

IN THE

Supreme Court of the United States

No. 12-

HIGHMARK INC.,

Petitioner,

v.

ALLCARE HEALTH MANAGEMENT SYSTEMS, INC.,

Respondent.

On Petition for a Writ of Certiorari to the United States Court of Appeals for the Federal Circuit

PETITION FOR A WRIT OF CERTIORARI

Highmark Inc. respectfully petitions for a writ of *certiorari* to review the judgment of the United States Court of Appeals for the Federal Circuit.

OPINIONS BELOW

The District Court's opinion is reported at 706 F. Supp. 2d 713 (Pet. App. 44a). The Federal Circuit's decision is reported at 687 F.3d 1300 (Pet. App. 1a). The Federal Circuit's order denying rehearing *en banc* is reported at 701 F.3d 1351 (Pet. App. 179a).

JURISDICTION

The Federal Circuit entered judgment on August 7, 2012, and denied rehearing on December 6, 2012. Pet. App. 1a, 181a. On February 4, 2013, the Chief Justice extended the time to file this petition to April 5, 2013. This Court's jurisdiction rests on 28 U.S.C. § 1254(1).

STATUTE INVOLVED

Section 285 of the Patent Act, 35 U.S.C. § 285, provides: "The court in exceptional cases may award reasonable attorney fees to the prevailing party."

INTRODUCTION

This petition arises from a patent-infringement case of the sort—in the District Court's own words—"that gives the term 'patent troll' its negative connotation." Pet. App. 69a. Respondent Allcare Health Management Systems, Inc., has one business and one business only: licensing a vague health-care patent through the threat of litigation. In 2002, Allcare accused Petitioner Highmark Inc. of infringing various claims of that patent. Allcare demanded exorbitant licensing fees and threatened suit if Highmark would not pay. Highmark refused and sought a declaratory judgment of non-infringement. Allcare counterclaimed for infringement. Highmark prevailed on summary judgment, but only after a litigation that needlessly dragged on for years and cost millions of dollars.

Highmark then sought attorneys' fees pursuant to 35 U.S.C. § 285, which grants district courts discretion to award fees in "exceptional" patent cases, including those in which infringement allegations are objectively baseless. The District Court, after carefully reviewing six years of litigation, agreed and found that a fee award was warranted. It was "firmly convince[d]" that this case was exceptional because, among other things, Allcare pursued "meritless allegations well after the lack of merit became apparent," advanced infringement theories that were contradicted by its own experts, and engaged in "deceitful conduct." Pet. App. 92a, 77a, 90a.

A divided Federal Circuit reversed. And it did so on the back of an abrupt departure from its own precedent: The panel majority decided to review *de novo* the District Court's finding that Allcare's claims were "objectively baseless," rather than reviewing for clear error, as the court has always done. Pet. App. 9a-11a. The panel thus refused to defer to the District Court's extensive findings and reversed, relying on a legal theory Allcare had not even advanced. Pet. App. 21a. That approach drew a sharp dissent from Judge Mayer and a five-judge dissent from denial of rehearing *en banc*. Judge Mayer wrote that, "[a]pplying th[e] highly deferential standard of review" that had long been settled law, "there is no basis for overturning the trial court's determination." Pet. App. 32a. And the *en banc* dissenters pointedly condemned the panel's *de novo* approach, stating that it "deviates from precedent" and establishes a standard "squarely at odds" with the approaches of "every regional circuit and the Supreme Court." Pet. App. 191a.

The dissenters were quite right about that. Remarkably, the Federal Circuit's decision to employ *de novo* review in this case splits with *every* other relevant authority. It is irreconcilable with this Court's cases, which hold in the context of analogous fee-award statutes that a district court's findings should be reviewed deferentially. *See Cooter & Gell* v. *Hartmax Corp.*, 496 U.S. 384, 400 (1990); *Pierce* v. *Underwood*, 487 U.S. 552, 563 (1987). It is irreconcilable with the Federal Circuit's own cases, which long have held that a Section 285 finding is "reviewed for clear error." *Cybor Corp.* v. *FAS Techs., Inc.*, 138 F.3d 1448, 1460 (Fed. Cir. 1998) (en banc). And it sets the Federal Circuit at odds with every

other court of appeals: While patent appeals—and thus Section 285 issues—are now consolidated in the Federal Circuit, every circuit considered the standard of review for Section 285 awards in the years before the Federal Circuit was created. They *all* came to the opposite conclusion from the decision below.

This Court should step in and reset the course on this increasingly important question. As the members of this Court have recognized, patent litigation is changing. "An industry has developed in which firms use patents not as a basis for producing and selling goods but, instead, primarily for obtaining licensing fees." *eBay Inc.* v. *MercExchange, LLC*, 547 U.S. 388, 396 (2006) (Kennedy, J., concurring). Often the threat of an exceptional-case finding is the primary deterrent to an unscrupulous patent troll bent on pressing baseless infringement allegations. And the "district court is better situated than the court of appeals to marshal the pertinent facts and apply the fact-dependent legal standard" to decide whether a fee award is warranted. *Cooter*, 496 U.S. at 402. The Federal Circuit's decision to arrogate that responsibility to itself improperly divides labor between the trial courts and courts of appeals, increases costs, and gives trolls more leverage to extort licensing fees for patents of suspect validity. It creates yet another perverse incentive in a patent system that is already subject to exploitation.

As the dissent below recognized, this Court has "reprimanded" the Federal Circuit often for not following this Court's guidance, but "[i]t is clear from *Highmark* that [the Federal Circuit] has not learned [its] lesson." Pet. App. 203a. A reminder here is in order. The writ should be granted.

STATEMENT

A. Background

Allcare is a patent assertion entity whose sole business is licensing U.S. Patent No. 5,301,105 (the '105 patent) through litigation and the threat of litigation. Allcare obtained the '105 patent for $75,000 through an assignment from the inventor. The patent discloses a vague "health management system" meant to facilitate the interaction of a physician, patient, bank, and insurance company. The patent claims at issue here cover a method of using a computer system to generate a list of possible treatments based on symptom data entered by a physician. Pet. App. 2a-4a.[1]

In 2002, Allcare found a new target for its licensing endeavor: Highmark, a non-profit Blue Cross Blue Shield Plan that provides health insurance to its members. Allcare sent Highmark a letter claiming that it had commissioned an analysis of "Highmark's transaction processing systems" and that it believed these systems infringed the '105 patent. Pet. App. 45a-46a. In the correspondence that followed, Allcare threatened a lawsuit that would lead to millions of dollars in legal fees and "substantial damages." *Id.* Rather than acquiesce in Allcare's demand for licensing fees, Highmark sought a declaratory judgment of non-infringement and invalidity. Allcare counterclaimed for infringement of claims 52, 53, and 102 of the '105 patent. Pet. App. 5a, 47a.

---

[1] As Judge Mayer observed in dissent, the '105 patent is probably invalid under Section 101's subject matter eligibility requirements. Pet. App. 41a-43a; *see Mayo Collaborative Servs.* v. *Prometheus Labs., Inc.*, 132 S. Ct. 1289 (2012); *Bilski* v. *Kappos*, 130 S. Ct. 3218 (2010).

After four years of discovery, Highmark moved for summary judgment. Allcare did not even oppose summary judgment on claim 102, and eventually withdrew that claim with prejudice. Pet. App. 5a. The District Court then granted summary judgment for Highmark on claims 52 and 53, finding that Highmark's system plainly did not include at least one critical element of those claims. *See Lucent Techs., Inc.* v. *Gateway, Inc.*, 580 F.3d 1301, 1317 (Fed. Cir. 2009) ("To infringe a method claim, a person must have practiced all steps of the claimed method.").

Specifically, claim element 52(c) required "entering * * * data symbolic of patient symptoms for tentatively identifying a proposed mode of treatment." Pet. App. 3a. The District Court found that that element required a physician to input a patient's symptoms into a computer system, which would respond with a list of potential treatments. Pet. App. 73a. But as Allcare's own expert admitted, in Highmark's computer system the physician herself enters the symptoms *and* proposed treatment into the system. *Id.* As the District Court explained, a physician who uses Highmark's system is not, therefore, "entering * * * data * * * *for* tentatively identifying a proposed mode of treatment," because the physician has already identified the treatment herself. Pet. App. 75a-76a (emphasis added). Because this element was missing, Highmark could not infringe claims 52. Further, because claim 53 was dependent upon claim 52 and thus included all of its limitations, summary judgment was mandated on that claim as well. *See Wolverine World Wide, Inc.* v. *Nike, Inc.*, 38 F.3d 1192, 1199 (Fed. Cir. 1994).

Allcare appealed, reiterating its infringement arguments to the Federal Circuit, which summarily rejected them without a written opinion. *Highmark, Inc.* v. *Allcare Health Mgmt. Sys., Inc.*, 329 F. App'x 280 (Fed. Cir. 2009). Then-Chief Judge Michel chastened Allcare's counsel at oral argument that his position on infringement "makes no sense to me at all." Tr. of July 10, 2009 Oral Argument at 6, *Highmark, Inc.* v. *Allcare Health Mgmt. Servs., Inc.*, No. 4:03-cv-1384, Doc. 541 Ex. 1 (N.D. Tex. Sept. 4, 2009).

B. The Exceptional-Case Finding

Highmark moved for fees under Section 285 of the Patent Act, which provides that a "court in exceptional cases may award reasonable attorney fees to the prevailing party." 35 U.S.C. § 285. Under Section 285, a case can be deemed "exceptional" for various types of misconduct. *Brooks Furniture Mfg., Inc.* v. *Dutailier Int'l, Inc.*, 393 F.3d 1378, 1381 (Fed. Cir. 2005). Apart from misconduct, a case can be exceptional if it meets two requirements: It must be "objectively baseless"—that is, "so unreasonable that no reasonable litigant could believe it would succeed"—and it must be brought in bad faith. *Old Reliable Wholesale, Inc.* v. *Cornell Corp.*, 635 F.3d 539, 544 (Fed. Cir. 2011); *Brooks*, 393 F.3d at 1381.

After an extensive review of the record, the District Court concluded that this case was exceptional, in part because Allcare's infringement contentions were objectively baseless and made in bad faith. Pet. App. 90a-92a, 174a-177a. The court determined that Allcare had not adequately investigated its case before filing, and that an investigation could have shown that Highmark was not infringing Allcare's patent. Pet. App. 64a-66a. As the court put it,

"Allcare had not done its homework when it began trolling for dollars and threatening litigation." Pet. App. 69a. The District Court likewise found that Allcare continued to pursue "meritless allegations after the lack of merit became apparent," Pet. App. 77a, and, indeed, after they were shown to be "without support by its own expert's report and deposition testimony." Pet. App. 78a. Allcare even "appear[ed] to acknowledge that it continued to pursue meritless allegations as insurance or leverage." *Id.*

Moreover, the District Court pointed to numerous instances of Allcare's "vexatious" and "deceitful" conduct over the course of the litigation. Pet. App. 90a. It found that Allcare had "used a survey with a stated purpose of identifying leaders in the medical-information-processing industry as a ruse to identify potential targets for licensing demands"; that it had asserted a frivolous res judicata defense; that it had changed its position several times on claim construction "[w]ithout reasonable explanation" and after court-ordered deadlines; and that it had made misrepresentations to another district court to get the case transferred to the Northern District of Texas. Pet. App. 69a, 82a-83a, 91a.

In sum, the District Court exhaustively canvassed the strength of Allcare's claims and its behavior during litigation. Its opinions on the fee and sanctions issues spanned well over a hundred pages. Pet. App. 44a-178a. And it concluded, based on that extensive factual review, that "Allcare's actions align with the sort of conduct that gives the term 'patent troll' its negative connotation. * * * The evidence of these actions firmly convinces the Court of Allcare's use of frivolous and vexatious tactics and supports an exceptional-case finding[.]" Pet. App. 69a, 82a.

C. The Federal Circuit's Decision

The Federal Circuit majority reversed the exceptional-case finding in part. Pet. App. 14a-31a. And it did so by reviewing that finding through a lens it had never before employed. In reviewing a district court's objective-baselessness findings, the Federal Circuit has for many years applied clear-error review. Pet. App. 207a-209a; *see infra* at 22-23. The majority in this case abandoned that standard. Instead, it held that objective baselessness is "a question of law based on underlying mixed questions of law and fact and is subject to *de novo* review." Pet. App. 9a (internal quotation marks omitted). It thus "review[ed] the court's determination of objective reasonableness without deference." *Id.*

Even without deference, the panel majority affirmed that Allcare's "claim 102 infringement litigation warranted an exceptional case finding." Pet. App. 14a. But it reversed the exceptional-case finding as to claim 52. The panel majority held that Allcare's construction of claim 52 was not objectively baseless because there "was support in the [patent] specification for Allcare's position." Pet. App. 20a. The majority admitted that Allcare had not "pointed to the specification as an argument in support of its theory." Pet. App. 21a. But, reviewing *de novo*, it held that its own hypothetical theory was non-frivolous and precluded an exceptional-case finding nonetheless. Pet. App. 21a-22a. The panel majority also held that none of the instances of litigation misconduct found by the District Court separately warranted an exceptional-case finding. Pet. App. 24a. In the end, the majority "remand[ed] th[e] case to the district court for a calculation of attorneys'

fees based on the frivolity of the claim 102 allegations only." Pet. App. 31a.

Judge Mayer filed a sharply-worded dissent. He wrote that under longstanding circuit precedent, objective baselessness is "a finding of fact which may be set aside only for clear error." Pet. App. 31a. He further decried the Federal Circuit's "increasing infatuation with *de novo* review of factual determinations," which is "an enormous waste of resources and vitiates the critically important fact-finding role of the district courts." Pet. App. 32a-33a (citing *Anderson* v. *City of Bessemer City*, 470 U.S. 564, 575 (1985)). And he explained why deference is particularly appropriate in the exceptional-case context:

> As an appellate court, we are ill-suited to weigh the evidence required to make an exceptional case determination. In many cases, a trial court will declare a case exceptional only after spending months—and sometimes even years—reviewing the evidence, hearing testimony, and evaluating the conduct of the litigants. Its intimate familiarity with the facts of the case, and the parties involved, place it in a far superior position to judge whether or not a litigant's claims of infringement were objectively baseless.

Pet. App. 35a-36a.

Judge Mayer explained that deferential review was required not just by the Federal Circuit's case law but by this Court's binding precedent. "Although the Supreme Court has not yet spoken on the appropriate standard of review applicable to section 285 exceptional case determinations," he wrote, "it has made clear that a highly deferential standard of review applies in analogous proceedings." Pet. App.

37a. In *Cooter*, this Court held that " '[a]n appellate court's review of whether a legal position was reasonable or plausible' " for purposes of Rule 11 "must be reviewed under a highly deferential abuse of discretion standard." Pet. App. 38a (quoting *Cooter*, 496 U.S. at 402). And in *Pierce*, this Court held that "in the context of fee awards under the Equal Access to Justice Act * * * a deferential abuse of discretion standard applies, even though an EAJA award turns on the question of whether the government's litigation position had a 'reasonable basis both in law and fact.' " *Id.* (quoting *Pierce*, 487 U.S. at 565). Judge Mayer concluded that *Cooter* and *Pierce* were binding and required deferential review of Section 285 fee awards; Section 285 was not different in any relevant way. Pet. App. 38a-39a.

Finally, Judge Mayer demonstrated that—evaluated through the proper standard of review—this is an easy case: "Given that Allcare persisted in advancing infringement allegations that were both in direct conflict with the plain claim language and unsupported by the testimony of its own expert, the district court had ample grounds for concluding that Allcare's allegations of infringement of claim 52(c) were frivolous." Pet. App. 40a. He would have affirmed the fee award in full.

D. The *En Banc* Dissent

Highmark petitioned for rehearing *en banc*, which the Federal Circuit denied by a vote of six to five.[2] Judges Moore and Reyna each wrote dissents.

---

[2] Judge Mayer, who wrote the panel dissent, is a senior judge and could not participate in the *en banc* vote. A total of six of the twelve Federal Circuit judges that considered this case thus disagreed with the panel's holding.

Judge Moore, joined in full by four other judges, attacked the panel decision for "deviat[ing] from precedent, invad[ing] the province of the fact finder, and establish[ing] a review standard for exceptional case findings in patent cases that is squarely at odds with the highly deferential review adopted by every regional circuit and the Supreme Court in other areas of the law." Pet. App. 191a. She warned that the Federal Circuit must "avoid the temptation to label everything legal and usurp the province of the fact-finder with [its] manufactured *de novo* review." Pet. App. 202a. And she too concluded that this Court's decisions in *Cooter* and *Pierce* provide the governing rule. "Under Rule 11, as with objective baselessness, the district court must determine whether a party's position was objectively unreasonable," she wrote. Pet. App. 195a. "In *Cooter*, the Supreme Court concluded that all aspects of a sanctions determination under Rule 11 should be reviewed on appeal under an abuse of discretion standard. * * * The parallels to Rule 11 are compelling, and in my view dispositive of how we should approach the 'objective baselessness' inquiry." Pet. App. 196a-197a. Judge Moore noted that the Supreme Court had "reprimanded" the Federal Circuit not long ago for disregarding Supreme Court precedent and "creating patent-law specific rules." Pet. App. 203a. "It is clear from *Highmark*," she wrote, that "our court has not learned its lesson." *Id.*

Judge Reyna, in a separate dissent, explained that "[e]ven a cursory review of our cases reveals that we have clearly set forth a deferential standard of review and we have routinely communicated to litigants and lower courts that we will review all § 285 findings for clear error." Pet. App. 208a. He

continued: "[T]he established precedent is especially wise, and should not be disturbed because it respects the enduring balance between the trial judge and the appellate panel in carrying out their distinctive responsibilities." *Id.* (citing *Salve Regina College* v. *Russell*, 499 U.S. 225, 233 (1991)).

This petition followed.

REASONS FOR GRANTING THE PETITION

This case warrants *certiorari* review. The Federal Circuit's decision to review "objective baselessness" findings *de novo* cannot be reconciled with this Court's precedents. It conflicts with decisions in *every* other circuit. It splits the Federal Circuit internally and abandons that court's established precedent—both cert-worthy factors, given the Federal Circuit's unique exclusive jurisdiction over patent matters. *See Warner-Jenkinson Co.* v. *Hilton Davis Chem. Co.*, 520 U.S. 17, 21 (1997) (granting *certiorari* to resolve a "significant disagreement" within the Federal Circuit, which had split the *en banc* court 7-5); *Festo Corp.* v. *Shoketsu Kinzoku Kogyo Kabushiki Co., Ltd.*, 535 U.S. 722, 727 (2002) (granting *certiorari* when the Federal Circuit's "holding departed from its own cases").

The issue presented also has tremendous practical importance. Litigation by patent assertion entities, sometimes called "patent trolls," now accounts for a majority of all patent cases. The threat of an exceptional-case finding is a crucial deterrent to meritless suits designed to extort licensing fees. The district court is in the best position to apply the "fact-dependent legal standard" and to determine when fees are warranted. *Cooter*, 496 U.S. at 402. Placing that responsibility in the court of appeals creates

tremendous inefficiencies, further inflates out-of-control legal costs, and increases the risk of error. As the *en banc* dissenters observed: "There is simply no reason to believe that we, as an appellate tribunal spending just thirty minutes with the attorneys and having a limited record and knowledge of the events taking place in the proceeding below, are in a better position than the trial judge to decide 'objective baselessness.'" Pet. App. 200a-201a. Just so. This Court should grant *certiorari* and reverse.

I. THE DECISION BELOW CANNOT BE RECONCILED WITH THIS COURT'S PRECEDENTS.

This Court, on two occasions, has mandated deference to a district court's findings in contexts closely analogous to an exceptional-case determination. The decision below is irreconcilable with those cases. This Court should grant *certiorari* to ensure that the Federal Circuit faithfully follows binding precedent. *See KSR Int'l Co.* v. *Teleflex Inc.*, 550 U.S. 398, 407 (2007) (granting *certiorari* because the Federal Circuit decided a case "in a manner contrary to [the Patent Act] and our precedents").

1. In *Pierce*, the Court considered the proper standard of review for fee awards under the Equal Access to Justice Act, 28 U.S.C. § 2412(d). That Act authorizes a court to award attorneys' fees in any civil action brought by or against the United States if the court finds that the position of the United States was not "substantially justified." *Id.* A position is not substantially justified if it has no "reasonable basis in both law and fact," *Pierce*, 487 U.S. at 565—essentially the same as the "no reasonable litigant could believe it would succeed" standard used to

judge objective baselessness under the Patent Act. *Old Reliable Wholesale*, 635 F.3d at 544.

This Court in *Pierce* held that appellate courts should apply "an 'abuse of discretion' standard" when reviewing a district court's reasonable-basis finding. 487 U.S. at 559. Several considerations dictated that conclusion. The Court noted that "[i]t is especially common for issues involving what can broadly be labeled 'supervision of litigation,' which is the sort of issue presented here, to be given abuse-of-discretion review." *Id.* at 558 n.1. The Court also explained that appellate standards of review often reflect "a determination that, as a matter of the sound administration of justice, one judicial actor is better positioned than another to decide the issue in question." *Id.* at 559-560 (quoting *Miller* v. *Fenton*, 474 U.S. 104, 114 (1985)). That consideration militated in favor of deferential review:

> Not infrequently, the question will turn upon not merely what was the law, but what was the evidence regarding the facts. By reason of settlement conferences and other pretrial activities, the district court may have insights not conveyed by the record, into such matters as whether particular evidence was worthy of being relied upon, or whether critical facts could easily have been verified by the [losing party].

Id. at 560. Moreover, "even where the district judge's full knowledge of the factual setting can be acquired by the appellate court, that acquisition will often come at unusual expense[.]" *Id.* The appellate court would have to "undertake the unaccustomed task of reviewing the entire record, not just to determine whether there existed the usual minimum support for the merits determination made by the factfinder

below, but to determine whether urging of the opposite merits determination was substantially justified." *Id.*

Notably, the Court held that deferential, abuse-of-discretion review extends even to "purely legal" questions in connection with the fee award. *Id.* at 560. That makes sense because the question on review of a fee award "will not be precisely the same as the merits"; as a result, "the investment of appellate energy will either fail to produce the normal law-clarifying benefits that come from an appellate decision on a question of law, or else will strangely distort the appellate process." *Id.* at 561. Either way, *de novo* scrutiny is not an effective or efficient use of a court of appeals' time.

The considerations driving *Pierce* apply with equal force here, as the dissenters recognized. Pet. App. 38a, 197a-198a. After all, the basic question in EAJA and Patent Act fee petitions is the same: whether a claim has objective merit. The standard of review thus should be the same too. A trial judge in a patent case, as in any other type of case, will have "insights not conveyed by the record" and a "full knowledge of the factual setting" that an appellate court could only attain with great effort. *Pierce*, 487 U.S. at 560. And in a patent case, just like an EAJA case, the determination of reasonableness (or lack thereof) "may turn on legal positions taken, on factual support for those positions, or both," and "[t]he trial court is in the best position to make the requisite findings and weigh them accordingly." Pet. App. 198a (discussing *Pierce*). The panel majority's *de novo* review standard cannot be reconciled with *Pierce*.

2. The decision below likewise cannot be squared with *Cooter*, which adopted a deferential standard for reviewing Rule 11 sanctions. *See* 496 U.S. at 399-402. Rule 11 authorizes sanctions against an attorney for advancing contentions that are not "warranted by existing law" or that lack "evidentiary support." Fed. R. Civ. Proc. 11(b). Thus, as this Court recognized in *Cooter*, "[d]etermining whether an attorney has violated Rule 11 involves a consideration of three types of issues": first, the factual basis for the claim; second, legal issues related to whether a claim is "warranted by existing law"; and third, whether to sanction and the amount of any sanction. 496 U.S. at 399. Before *Cooter*, some courts of appeals had varied the level of deference accorded to a district court depending on the *type* of issue the court was deciding. *Id.* The Ninth Circuit, for example, had reviewed questions of the first type for clear error, questions of the second type *de novo*, and questions of the third type for abuse of discretion. *Id.*

This Court squarely rejected that approach. It held, instead, that "an appellate court should apply an abuse-of-discretion standard in reviewing *all aspects* of a district court's Rule 11 determination." *Id.* at 405 (emphasis added). And it made clear that "all" means "all." The appellate courts thus must defer to the "the district court's legal conclusions" about whether a position was warranted, just as they do to more quintessentially factual conclusions. *See id.* at 401.

The Court reached that conclusion by doing what the panel majority in this case *refused* to do—namely, analogize between the case before it and the standard applicable in a similar fee statute. The

Court thus looked to *Pierce* and concluded that *Pierce* "strongly supports applying a unitary abuse of discretion standard to all aspects of a Rule 11 proceeding." *Cooter*, 469 U.S. at 403. That was so for two reasons. First, a "ruling that a litigant's position is factually well grounded and legally tenable for Rule 11 purposes is * * * fact specific," just like a determination in the EAJA setting about whether a legal position is "substantially justified." *Id.* Thus, in the Rule 11 context, just as in *Pierce*, the "district court [i]s 'better positioned' to make such a factual determination." *Id.* (quoting *Pierce*, 487 U.S. at 560). Second, in the Rule 11 context, like the EAJA context, "only deferential review g[ives] the district court the necessary flexibility to resolve questions involving 'multifarious, fleeting, special, narrow facts that utterly resist generalization.'" *Id.* at 404 (quoting *Pierce*, 487 U.S. at 562). For both reasons, the Court concluded that the "district court is better situated than the court of appeals to marshal the pertinent facts and apply the fact-dependent legal standard mandated by Rule 11." *Id.* at 402. Abuse-of-discretion review accordingly applied. *Id.* at 405.

Cooter, like *Pierce*, weighs strongly in favor of—if it does not mandate—deferential review of all aspects of a district court's exceptional-case determination. And yet the decision below adopted the *exact* tripartite review structure that was rejected in *Cooter*. It calls for review of the factual question of bad faith for clear error, the mixed question of objective baselessness *de novo*, and the actual award of fees for abuse of discretion. Pet. App. 9a-12a, 183a-184a. This Court squarely rejected that incoherent approach in *Cooter*. It should do the same here. In Section 285 cases, just as in Rule 11 or EAJA cases, the inquiry

whether a litigant's position was justified has factual components. *Compare Pierce*, 487 U.S. at 560 (the EAJA question frequently "will turn upon not merely what was the law, but what was the evidence regarding the facts"), *with FilmeTec Corp.* v. *Hydranautics*, 67 F.3d 931, 938 (Fed. Cir. 1995) (court must "tak[e] all the facts and circumstances into account" before determining whether a claim is "objectively baseless"). Indeed, that is even more necessary in the Section 285 context because "unlike the situation under Rule 11," a Section 285 fee award "*is based on the entire case*, and does not turn on whether the patentee's position would have been reasonable at the time of filing the complaint or pleading." Pet. App. 188a (emphasis added). A retrospective evaluation of the entire record—in this case a record spanning six years—requires more familiarity with the facts and nuances of a litigation than would a one-off snapshot of the state of play on a date certain. *Cooter* and *Pierce* apply *a fortiori*.

3. The decision below is also at odds with Federal Rule of Civil Procedure 52(a)(6), which provides that "findings of fact, whether based on oral or other evidence, must not be set aside unless clearly erroneous." The Federal Circuit has stated on countless occasions that the "exceptional case" determination is "a question of fact." *E.g.*, *Frank's Casing Crew & Rental Tools, Inc.* v. *Weatherford Int'l, Inc.*, 389 F.3d 1370, 1376 (Fed. Cir. 2004); *Badalamenti* v. *Dunham's, Inc.*, 896 F.2d 1359, 1364 (Fed. Cir. 1990). Indeed, the exceptionality of a case must be proven by "clear and convincing evidence," Pet. App. 8a, a standard that "applies to questions of fact and not to questions of law." *Microsoft Corp.* v. *i4i Ltd. P'ship*, 131 S. Ct. 2238, 2253 (2011) (Breyer, J., concurring).

And Rule 52(a) says unequivocally that findings of fact can only be set aside if "clearly erroneous." It "does not make exceptions or purport to exclude certain categories of factual findings from the obligation of a court of appeals to accept a district court's findings unless clearly erroneous." *Pullman-Standard* v. *Swint*, 456 U.S. 273, 287 (1982). The Federal Circuit has no warrant to make such an exception here.

4. The panel majority found support for its *de novo* standard in *Professional Real Estate Investors, Inc.* v. *Columbia Pictures Industries, Inc.* (*"PRE"*), 508 U.S. 49 (1993). That reliance was mistaken, as the dissenters from denial of rehearing explained. Pet. App. 192a-195a.

PRE involved the "sham" exception to antitrust immunity. The question before the Court was whether litigation could be a "sham merely because a subjective expectation of success does not motivate the litigant." 508 U.S. at 57. The Court answered no. It explained that a lawsuit can only be a "sham" if it is "objectively baseless," and a suit is "objectively baseless" only if the plaintiff lacks "probable cause to institute legal proceedings." *Id.* at 60-62. In the course of its analysis, the Court noted that "where * * * there is no dispute over the predicate facts of the underlying legal proceeding, a court may decide probable cause as a matter of law." *Id.* at 63.

That is the sentence on which the panel majority relied for its newly-minted *de novo* standard of review. But that reliance is misplaced. First, the quoted sentence was discussing the allocation of authority between the trial judge and the *jury*, not the trial judge and the *appellate court*. The Court's citations make this plain: It cited two nineteenth-

century cases addressing whether the question of "probable cause," as an element of the tort of malicious prosecution, should go to the jury. *Stone* v. *Crocker*, 41 Mass. 81, 85 (1832) ("When the facts are undisputed," probable cause "becomes a mere question of law which the court must decide, and it would be useless and improper to take the opinion of a jury on it."); *Stewart* v. *Sonneborn*, 98 U.S. 187, 194 (1878). The sentence therefore is simply irrelevant to this case. No one disputes that an exceptional-case finding under the Patent Act is made by the court, not the jury. In that sense, it is a "question of law." But that does not mean it is subject to *de novo* review. To the contrary: *Cooter* and *Pierce* make clear that even some "legal" questions (in the *PRE* sense) decided by a trial court should be reviewed deferentially. *Cooter* and *Pierce* also make clear that the circumstances warrant deference here.

Second, in *PRE* the question of objective baselessness was not even in dispute. As the Court noted, "PRE neither 'allege[d] that the [copyright] lawsuit involved misrepresentations' nor 'challenge[d] the district court's finding that the infringement action was brought with probable cause, i.e., that the suit was not baseless.'" *PRE*, 508 U.S. at 54 (quoting *Columbia Pictures Indus., Inc.* v. *Prof'l Real Estate Investors, Inc.*, 944 F.2d 1525, 1530 (9th Cir. 1991)). Rather, the parties had *conceded* that the litigation was not objectively baseless; the issue was not even before the Court. *PRE* did not overrule two precedents—*Cooter* and *Pierce*—on an issue that was neither argued nor contested. That case provides no support for the panel majority's novel, no-deference approach.

II. THE DECISION BELOW CREATES BOTH AN INTRA-CIRCUIT AND INTER-CIRCUIT SPLIT.

In this case, the Federal Circuit departed from its own patent law precedents and split with the unanimous view of its sister circuits. Those factors reinforce the need for *certiorari* review.

1. The decision below breaks from a consistent line of Federal Circuit precedent. Until this case, it was settled law that an exceptional case finding is a "factual determination reviewed for clear error." *Cybor*, 138 F.3d at 1460 (en banc); *see, e.g.*, *Nilssen* v. *Osram Sylvania, Inc.*, 528 F.3d 1352, 1357 (Fed. Cir. 2008) ("We review a finding that a case is 'exceptional' within the meaning of 35 U.S.C. § 285 for clear error."); *Eon-Net LP* v. *Flagstar Bancorp*, 653 F.3d 1314, 1326 (Fed. Cir. 2011) ("[T]he district court did not clearly err in finding that Eon-Net pursued objectively baseless infringement claims."); *Computer Docking Station Corp.* v. *Dell, Inc.*, 519 F.3d 1366, 1380 (Fed. Cir. 2008) ("[T]he district court's finding that the action was not objectively baseless was not clearly erroneous"). Indeed, the Federal Circuit has not just applied the clear-error standard consistently; it had persuasively justified that deferential standard in terms that echo *Cooter* and *Pierce*: "When reviewing an exceptional case finding for clear error, we are mindful that the district court has lived with the case and the lawyers for an extended period. Having only the briefs and the cold record, and with counsel appearing before us for only a short period of time, we are not in the position to second-guess the trial court's judgment." *Eon-Net*, 653 F.3d at 1324. Both the panel dissent and the five dissenters from denial of rehearing *en banc* recognized this

settled law and urged the court to hew to it, to no avail. Pet. App. 31a-32a, 208a-210a.[3]

The Federal Circuit's abrupt swerve from its own precedent, and that court's deep internal divisions, weigh heavily in favor of *certiorari* review. E. Gressman *et al.*, *Supreme Court Practice* § 4.21, at 287 (9th ed. 2007) (the "likelihood of Supreme Court review increases" when the Federal Circuit "departs from its own patent law precedents"); *Warner-Jenkinson*, 520 U.S. at 21; *Festo*, 535 U.S. at 727. The Federal Circuit's exclusive jurisdiction over patent matters means that this divide will not percolate, and no guidance from other circuits will be forthcoming. The only way to resolve the dispute is for this Court to step in.

2. As Judge Moore accurately observed in dissent, the decision below is also "squarely at odds with the highly deferential review adopted by every regional circuit" in analogous areas of law. Pet. App. 191a. In light of this Court's unequivocal guidance, it is unsurprising that "the regional circuits are unanimous that the issue of objective reasonableness under Rule 11 is to be reviewed deferentially by the appellate courts." Pet. App. 196a; *see also id.* n.4 (citing cases). The same goes for fee awards under the EAJA and 28 U.S.C. § 1927. Pet. App. 199a & n.5 (citing cases). And with respect to the Lanham

---

[3] The Federal Circuit cases refer to "clear error," while *Cooter* and *Pierce* refer to "abuse of discretion," but the standards are effectively identical. *See Cooter*, 496 U.S. at 401 ("When an appellate court reviews a district court's factual findings, the abuse-of-discretion and clearly erroneous standards are indistinguishable: A court of appeals would be justified in concluding that a district court had abused its discretion in making a factual finding only if the finding were clearly erroneous.").

Act's fee provision[4]—a provision that is identical to Section 285 of the Patent Act—the courts are near-unanimous in favor of deference; only the Ninth Circuit is an outlier. The First Circuit, for example, has explained that "the district court has the intimate knowledge of the nuances of the underlying case" and is therefore "better situated than the court of appeals to marshal the pertinent facts and apply the fact-dependent legal standard." *Tamko Roofing Prods., Inc.* v. *Ideal Roofing Co.*, 282 F.3d 23, 30 (1st Cir. 2002) (quoting *Cooter*, 496 U.S. at 402). Ten other circuits agree. *See Farberware Licensing Co.* v. *Meyer Mktg. Co.*, 428 F. App'x 97, 99 (2d Cir. 2011); *Securacomm Consulting, Inc.* v. *Securacom Inc.*, 224 F.3d 273, 279 (3d Cir. 2000); *Employers Council On Flexible Comp.* v. *Feltman*, 384 F. App'x 201, 205-206 (4th Cir. 2010); *Nat'l Bus. Forms & Printing, Inc.* v. *Ford Motor Co.*, 671 F.3d 526, 537 (5th Cir. 2012); *Johnson* v. *Jones*, 149 F.3d 494, 503 (6th Cir. 1998); *TE-TA-MA Truth Found.-Family of URI, Inc.* v. *World Church of the Creator*, 392 F.3d 248, 257 (7th Cir. 2004); *Blue Dane Simmental Corp.* v. *American Simmental Ass'n*, 178 F.3d 1035, 1043 (8th Cir. 1999); *Nat'l Ass'n of Prof'l Baseball Leagues, Inc.* v. *Very Minor Leagues, Inc.*, 223 F.3d 1143, 1146 (10th Cir. 2000); *Tire Kingdom, Inc.* v. *Morgan Tire & Auto, Inc.*, 253 F.3d 1332, 1335-36 (11th Cir. 2001); *ALPO Petfoods, Inc.* v. *Ralston Purina Co.*, 913 F.2d 958, 971 (D.C. Cir. 1990). *But see Secalt S.A.* v. *Wuxi Shenxi Constr. Mach. Co.*, 668 F.3d 677, 687 (9th Cir. 2012).

---

[4] *See* 15 U.S.C. § 1117(a)(3) ("The court in exceptional cases may award reasonable attorney fees to the prevailing party.")

3. The decision below actually creates a circuit split with respect to the Patent Act itself, despite the Federal Circuit's exclusive patent jurisdiction. The "exceptional case" provision of the Patent Act, as it currently stands, was enacted in 1952. Between that date and the creation of the Federal Circuit in 1982, every court of appeals had occasion to determine the appropriate standard of review for a district court's exceptional-case finding. And the circuits were unanimous: An exceptional-case finding should be reviewed *deferentially*, for abuse of discretion. "The law placing, as it does, the discretion in the trial court to determine * * * whether the case is an exceptional one so that attorneys' fees should be allowed, appellate courts ought not and will not interfere with the exercise of such discretion." *Garrett Corp.* v. *American Safety Flight Sys., Inc.*, 502 F.2d 9, 22 (5th Cir. 1974); *see also Codex Corp.* v. *Milgo Elec. Corp.*, 717 F.2d 622, 630 (1st Cir. 1983); *American Safety Table Co.* v. *Schreiber*, 415 F.2d 373, 380 (2d Cir. 1969); *Omark Indus., Inc.* v. *Colonial Tool Co.*, 672 F.2d 362, 365 (3d Cir. 1982); *Western Elec. Co.* v. *Stewart-Warner Corp.*, 631 F.2d 333, 336 (4th Cir. 1980); *Kearney & Trecker Corp.* v. *Cincinnati Milacron Inc.*, 562 F.2d 365, 374 (6th Cir. 1977); *Loctite Corp.* v. *Fel-Pro, Inc.*, 667 F.2d 577, 584 (7th Cir. 1981); *Bolt, Beranek & Newman, Inc.* v. *McDonnell Douglas Corp.*, 521 F.2d 338, 344 (8th Cir. 1975); *Maurice A. Garbell, Inc.* v. *Boeing Co.*, 546 F.2d 297, 300-301 (9th Cir. 1976); *Lam, Inc.* v. *Johns-Manville Corp.*, 668 F.2d 462, 476 (10th Cir. 1982). The Federal Circuit has now set itself against the collective wisdom of every one of its sister circuits.

4. In sum, the Federal Circuit has not only abruptly broken from its own precedent in subjecting a district court's exceptional case finding to *de novo* scrutiny; it has broken from every other court of appeals. As the *en banc* dissent put it: "I can divine no reason * * * to disregard such clear and wise precedent from our sister circuits." Pet. App. 196a-197a. There is no reason. This Court should grant *certiorari* to bring the Federal Circuit in line with its sister circuits.

III. THE QUESTION PRESENTED IS IMPORTANT TO PATENT LAW AND THE PRESERVATION OF PROPER ROLES OF TRIAL AND APPELLATE COURTS.

1. Patent litigation is changing. Members of this Court recognized several years ago that "[a]n industry has developed in which firms use patents not as a basis for producing and selling goods but, instead, primarily for obtaining licensing fees." *eBay*, 547 U.S. at 396 (Kennedy, J., concurring). That development has accelerated: The year *eBay* was decided, 19 percent of all patent infringement suits were filed by patent assertion entities. That number is now 62 percent. C. Chien, *Patent Trolls by the Numbers*, Patently-O, Mar. 14, 2013.[5] And suits filed by patent assertion entities have a startlingly low success rate: Such entities win only 8 percent of the time when the suit is actually litigated to judgment, compared with a 40 percent success rate for companies that actually practice their patents. J. Allison *et al.*, *Patent Quality and Settlement Among Repeat Patent Litigants*, 99 Geo. L. J. 677, 693-694 (2011). As Judge Lourie

---

[5] *Available at* http://www.patentlyo.com/patent/2013/03/chien-patent-trolls.html.

has observed: "Many patent suits are brought these days with little chance of success. Appeals to this Court from summary judgments of non-infringement based on claim constructions that are affirmed here are testament to the frequency of non-meritorious claims brought in the district courts." *Medtronic Navigation, Inc.* v. *BrainLAB Medizinische Computersysteme GmbH*, 603 F.3d 943, 967 (Fed. Cir. 2010) (Lourie, J., concurring).

That vanishingly small success rate is no coincidence. It stems from the basic business model of many patent assertion entities like Allcare: threaten suit with weak claims in the hopes of extracting a licensing fee that is less than what it would cost a firm to actually litigate. And the costs of defending against these suits can be devastating. According to published data, the median cost of defending patent suits with less than $1 million at stake is $650,000; the average cost of defending patents suits with $1 million to $25 million at stake is about $2.5 million; and the average cost of defending patent suits with more than $25 million at stake is over $5 million. Am. Intellectual Property Law Ass'n, *Report of the Economic Survey 2011*, at 35 (2012).[6] One estimate puts the total direct costs of defending against suits by patent assertion entities in 2011 at over $29 billion. J. Bessen & M. Meurer, *The Direct Costs from NPE Disputes* at 31 (Boston Univ. Sch. of Law Working Paper No. 12-34, 2012).[7] On the other

---

[6] *Available at* http://docs.justia.com/cases/federal/district-courts/california/cacdce/8:2010cv01656/486026/282/4.pdf?ts=1338593710.

[7] *Available at* http://papers.ssrn.com/sol3/papers.cfm?abstract_id=2091210.

hand, patent assertion entities can litigate on a contingency basis, and so have almost nothing to lose by bringing a weak suit—except being hit with attorneys' fees under 35 U.S.C. § 285.

The threat of an exceptional case finding is thus often the sole consideration dissuading a patent troll from pressing meritless claims against innocent parties. And the district court is simply in the best position to "apply the fact-dependent legal standard" and make that finding. *Cooter*, 496 U.S. at 402. "Trial judges can spend hundreds of hours reading and rereading all kinds of source material, receiving tutorials on technology from leading scientists, formally questioning technical experts and testing their understanding against that of various experts, [and] examining on site the operation of the principles of the claimed invention." *Cybor*, 138 F.3d at 1477 (Rader, J., dissenting). The Federal Circuit, by contrast, sees only the briefs, record excerpts, and a short, strictly regulated oral argument. A "sterile written record can never convey all the nuances and intangibles of the decisional process." *Id.* at 1478.

2. This case is a perfect example of why the standard of review should reflect the district court's institutional advantages. The question under Section 285 is not whether a legal argument has merit in a vacuum; rather, a court "tak[es] *all of the facts and circumstances* into account" before determining whether a claim is "objectively baseless." *FilmeTec*, 67 F.3d at 938. The Federal Circuit, pronouncing *ex cathedra* that this suit was not objectively baseless, simply lost sight of the circumstances and contextual factors driving the District Court's decision.

Recall that the panel majority found Allcare's suit not "baseless" on the ground that Allcare's construc-

tion of claim element 52(c) found some support in the patent specification. Pet. App. 20a-21a. But that rationale was fatally flawed, as the trial judge immediately would have recognized. First, the parties *stipulated* to the meaning of a key word in claim 52(c), and the Federal Circuit's gloss is contrary to the stipulation. Pet. App. 133a. Second, Allcare's own expert effectively conceded that the limitation of claim 52(c) was not met. Pet. App. 73a-74a. Third, Allcare's pre-filing investigation regarding claim 52(c) was woefully inadequate. Pet. App. 59a-62a. Finally, Allcare had never advanced the theory ultimately adopted by the panel majority in support of its infringement arguments in the District Court or on appeal. The majority invented it after-the-fact. In light of all these facts and circumstances, no "reasonable litigant in [Allcare's] position could realistically expect success on the merits." *PRE*, 508 U.S. at 63. At most they could expect some leverage toward a settlement, since litigating to judgment is expensive. But that expectation assuredly is not enough to make an assertion of infringement reasonable.

In short, the Federal Circuit was able to reach the conclusion it did only because it lost sight of—or never understood—facts and circumstances that revealed the unreasonableness of Allcare's litigating position. Those facts and circumstances were apparent to the trial judge just by virtue of having lived with the case for years. This case exemplifies why allowing a panel of appellate judges to "usurp the province of the fact finder" leads to bad decisions. Pet. App. 202a. The district court is a "firsthand observer of proceedings below" with a "view from the trenches." Pet. App. 36a (quoting *Kale* v. *Combined*

Ins. Co., 861 F.2d 746, 758 (1st Cir. 1988)). The Supreme Court and all the regional circuits have formalized that superior vantage in a deferential standard of review. This Court should ensure that the Federal Circuit does too.

3. The case is deeply important for another reason: It is part of a larger pattern of Federal Circuit decisions arrogating greater authority to the court of appeals and upsetting the traditional relationship between trial and appellate courts. The Federal Circuit now has asserted *de novo* review for claim construction, *Cybor*, 138 F.3d at 1456, willfulness, *Bard Peripheral Vascular, Inc.* v. *W.L. Gore & Assocs., Inc.*, 682 F.3d 1003 (Fed. Cir. 2012); obviousness, *Merck & Co., Inc.* v. *Teva Pharmaceuticals USA, Inc.*, 395 F.3d 1364, 1369 (Fed. Cir. 2005); enablement, *Sitrick* v. *Dreamworks, LLC*, 516 F.3d 993, 999 (Fed. Cir. 2008); definiteness, *Young* v. *Lumenis, Inc.*, 492 F.3d 1336, 1344 (Fed. Cir. 2007); conception, *Slip Track Sys., Inc.* v. *Metal-Lite, Inc.*, 304 F.3d 1256, 1262 (Fed. Cir. 2002)—the list goes on. All of these determinations have substantial factual components.

It is time to put a halt to the Federal Circuit's expansion of *de novo* review. This Court has said that proceedings in district court should be the "main event" and not a "tryout on the road." *Anderson*, 470 U.S. at 575. The Federal Circuit is increasingly making itself the "main event." That is harmful to federal judicial administration. It upsets the proper roles of trial and appellate courts. And it is bad for litigants: It will make patent lawsuits more uncertain, more unpredictable, and more expensive.

CONCLUSION

For the foregoing reasons, the petition for a writ of *certiorari* should be granted.

Respectfully submitted,

CYNTHIA E. KERNICK
JAMES C. MARTIN
KIM M. WATTERSON
KEVIN S. KATONA
THOMAS M. POHL
REED SMITH LLP
225 Fifth Avenue
Pittsburgh, PA 15222
(412) 288-3131

NEAL KUMAR KATYAL*
DOMINIC F. PERELLA
HOGAN LOVELLS US LLP
555 13th Street, N.W.
Washington, D.C. 20004
(202) 637-5528
neal.katyal@hoganlovells.com

Counsel for Petitioner
**Counsel of Record*

March 2013

APPENDICES

APPENDIX A

UNITED STATES COURT OF APPEALS FOR THE FEDERAL CIRCUIT

HIGHMARK, INC.,

Plaintiff-Appellee,

v.

ALLCARE HEALTH MANAGEMENT SYSTEMS, INC.,

Defendant-Appellant.

2011-1219

Appeal from the United States District Court for the Northern District of Texas in case no. 03-CV-1384, Judge Terry Means.

Decided: August 7, 2012

CYNTHIA E. KERNICK, Reed Smith, LLP, of Pittsburgh, Pennsylvania, argued for plaintiff-appellee. With her on the brief were JAMES C. MARTIN, KEVIN S. KATONA and THOMAS M. POHL.

DONALD R. DUNNER, Finnegan, Henderson, Farabow, Garrett & Dunnerr, LLP, of Washington, DC, argued for defendant-appellant. With him on the brief were ERIK R. PUKNYS, of Palo Alto,

California. Of counsel on the brief was DAN S. BOYD, The Boyd Law Firm, P.C., of Dallas, Texas.

Before NEWMAN, MAYER, and DYK, *Circuit Judges*.

Opinion for the court filed by *Circuit Judge* DYK. Dissenting in part opinion filed by *Circuit Judge* MAYER.

DYK, *Circuit Judge*.

Allcare Health Management Systems, Inc. ("Allcare") appeals from an order of the United States District Court for the Northern District of Texas finding this case exceptional under 35 U.S.C. § 285 and awarding attorneys' fees and costs to Highmark, Inc. ("Highmark"). *See Highmark, Inc. v. Allcare Health Mgmt. Sys. Inc.* ("*Exceptional Case Order*"), 706 F. Supp. 2d 713, 738 (N.D. Tex. 2010). The district court found the case exceptional because it concluded that Allcare had pursued frivolous infringement claims, asserted meritless legal positions during the course of the litigation, shifted its claim construction positions, and made misrepresentations in connection with a motion to transfer venue. We affirm in part, reverse in part, and remand.

BACKGROUND

I

Allcare owns U.S. Patent No. 5,301,105 ("the '105 patent"), which is directed to "managed health care systems" used to interconnect and integrate physicians, medical care facilities, patients, insurance companies, and financial institutions, '105 Patent col. 1 ll. 4-11, particularly with respect to utilization review. In health care, "utilization

review" is the process of determining whether a health insurer should approve a particular treatment for a patient. In general, the patent's claims cover a method of determining whether utilization review is necessary in a particular instance, and whether a recommended treatment is appropriate. If utilization review is required, the method prevents authorization and payment until the appropriateness of the treatment has been determined and the treatment has been approved.

At issue in this case are claims 52, 53, and 102. Independent claim 52 recites:

> A method of managing a comprehensive health care management system utilizing a data processor, data bank memories, input means and payment means comprising:
>
> (a) entering into said data processor data identifying each of a predetermined plurality or persons;
>
> (b) entering into one of said data bank memories an identification of predetermined procedures requiring utilization review;
>
> (c) entering through said input means into said data processor data symbolic of patient symptoms for tentatively identifying a proposed mode of treatment and, when said proposed mode of treatment includes one of said predetermined procedures requiring utilization review, producing indicia indicative thereof; and
>
> (d) preventing payment therefor by said payment means until said utilization review has been obtained and data indicative thereof has been entered into said system.

'105 patent col. 21 ll. 22-41. Claim 53 depends from claim 52 and claims the additional step of producing some sort of indicia when the proposed mode of treatment includes ancillary services, such as by pharmacists, prosthesis providers, dentists, and the like. '105 patent col. 21 ll. 43-49, col. 14 ll. 35-38. Independent claim 102 recites:

> A method of managing an integrated health care management system having input means, payment means and memory storage comprising:
>
> (a) storing through said input means into said memory storage personal health profile data for each of a predetermined plurality of persons;
>
> (b) storing into said memory storage symptoms and treatment data for each of a predetermined plurality of health profiles and problems;
>
> (c) storing in said memory storage criteria for identifying treatments requiring utilization review;
>
> (d) storing in said memory storage criteria for identifying treatments requiring second opinions;
>
> (e) entering into said system information identifying a proposed medical treatment for one of said plurality of persons;
>
> (f) identifying whether or not said proposed medical treatment requires utilization review; and
>
> (g) preventing said system from approving payment for said proposed medical treatment if said proposed medical treatment requires utilization review until such utilization review has been conducted.

'105 patent col. 28 ll. 8-30.

II

Highmark, a Pennsylvania insurance company, filed suit against Allcare in the Western District of Pennsylvania seeking a declaratory judgment of non-infringement, invalidity, and unenforceability of all claims of the '105 patent. After the case was transferred to the Northern District of Texas, Allcare counterclaimed for infringement, asserting infringement of claims 52, 53, and 102. During the course of the case, the district court appointed a special master to resolve issues of claim construction, including various limitations in claims 52 and 102. These claim construction disputes are described below. The special master issued a claim construction report, Special Master's Report and Recommended Decisions on Claim Construction ("*Claim Construction Report*"), *Highmark, Inc. v. Allcare Health Mgmt. Sys., Inc.*, No. 4:03-CV-1384-Y (N.D. Tex. Dec. 20, 2006), which the district court adopted, *Highmark, Inc. v. Allcare Health Mgmt. Sys., Inc.*, No. 4:03-CV-1384-Y (N.D. Tex. Mar. 23, 2007).

Highmark moved for summary judgment of non-infringement. While Allcare opposed Highmark's motion with respect to claims 52 and 53, it did not oppose the motion with regard to claim 102 and formally withdrew the infringement allegations with respect to that claim. The district court reappointed the special master, who recommended that summary judgment of non-infringement of claims 52 and 53 be granted. Special Master's Report and Recommended Decisions on Summary Judgment Motions ("*Summary Judgment Report*"), *Highmark, Inc. v. Allcare Health Mgmt. Sys., Inc.*, No. 4:03-CV-1384-Y,

slip op. at 15 (N.D. Tex. Apr. 25, 2008). The district court adopted the special master's recommendations, Amended Order Adopting Findings and Recommendations of Special Master, *Highmark, Inc. v. Allcare Health Mgmt. Sys., Inc.*, No. 4:03-CV-1384-Y (N.D. Tex. Sept. 2, 2008), and entered final judgment of non-infringement in favor of Highmark, Amended Final Judgment, *Highmark, Inc. v. Allcare Health Mgmt. Sys., Inc.*, No. 4:03-CV-1384-Y (N.D. Tex. Oct. 15, 2008). Allcare appealed. On July 13, 2009, this court affirmed the district court's judgment under Federal Circuit Rule 36 without a written opinion. *Highmark, Inc. v. Allcare Health Mgmt. Sys., Inc.*, 329 F. App'x 280 (Fed. Cir. 2009).

While the previous appeal was pending before this court, Highmark moved for an exceptional case finding with respect to Allcare and an award of attorneys' fees and expenses under section 285 and for sanctions against Allcare's attorneys under Rule 11 of the Federal Rules of Civil Procedure.

After reviewing the record, the district court found the case exceptional and that Allcare's attorneys had violated Rule 11. *Exceptional Case Order*, 706 F. Supp. 2d at 738-39. The court based both its exceptional case finding and the Rule 11 sanctions on the same conduct. The court found that Allcare's claims for infringement of claims 52 and 102 were frivolous. The court also found that Allcare engaged in litigation misconduct by asserting a frivolous position based on *res judicata* and collateral estoppel, shifting its claim construction position throughout the course of the proceedings before the district court, and making misrepresentations to the

Western District of Pennsylvania in connection with a motion to transfer venue. After finding the case exceptional under section 285, the district court entered judgment awarding Highmark $4,694,727.40 in attorneys' fees and $209,626.56 in expenses, and it also invoked its inherent power to impose sanctions and awarded $375,400.05 in expert fees and expenses. The district court did not determine how much of the monetary awards were attributable to each issue.

Shortly after the district court's exceptional case finding and judgment awarding fees and expenses, Allcare's attorneys withdrew from the case based on conflicts of interest and separately moved for reconsideration of the Rule 11 sanctions. To support the motions for reconsideration, the attorneys provided additional evidence concerning their representation of Allcare. Based on these filings, the district court vacated the Rule 11 sanctions against the attorneys. After the court vacated the attorney sanctions, Allcare moved to reconsider the exceptional case finding and the judgment awarding attorneys' fees, or in the alternative to grant a new trial or hold an evidentiary hearing. This motion was denied. Allcare timely appealed. We have jurisdiction pursuant to 28 U.S.C. § 1295(a).

DISCUSSION

Under 35 U.S.C. § 285, a "court in exceptional cases may award reasonable attorney fees to the prevailing party." Once it is determined that the party seeking fees is a prevailing party, determining whether to award attorneys' fees under 35 U.S.C. § 285 is a two-step process. *Forest Labs., Inc. v. Abbott Labs.*, 339 F.3d 1324, 1327-28 (Fed. Cir. 2003). First, a

prevailing party must establish by clear and convincing evidence that the case is "exceptional." *Id.* at 1327. An award of fees against a patentee can be made for a frivolous claim, inequitable conduct before the Patent and Trademark Office, or misconduct during litigation. *Beckman Instruments, Inc. v. LKB Produkter AB*, 892 F.2d 1547, 1551 (Fed. Cir. 1989). Second, if the case is deemed exceptional, a court must determine whether an award of attorneys' fees is appropriate and, if so, the amount of the award. *Forest Labs.*, 339 F.3d at 1328. "[T]he amount of the attorney fees [awarded] depends on the extent to which the case is exceptional." *Special Devices, Inc. v. OEA, Inc.*, 269 F.3d 1340, 1344 (Fed. Cir. 2001).

There is no dispute that Highmark is the prevailing party in this litigation. We consider the various grounds relied on by the district court for finding this case exceptional.

I

The central issue is whether Allcare's infringement counterclaims against Highmark were frivolous. It is established law under section 285 that absent misconduct in the course of the litigation or in securing the patent, sanctions may be imposed against the patentee only if two separate criteria are satisfied: (1) the litigation is brought in subjective bad faith, and (2) the litigation is objectively baseless. *Brooks Furniture Mfg., Inc. v. Dutailier Int'l, Inc.*, 393 F.3d 1378, 1381 (Fed. Cir. 2005). The requirement that the litigation be objectively baseless "does not depend on the state of mind of the [party] at the time the action was commenced, but rather requires an objective assessment of the

merits." *Id.* at 1382. "To be objectively baseless, the infringement allegations must be such that no reasonable litigant could reasonably expect success on the merits." *Dominant Semiconductors Sdn. Bhd. v. OSRAM GmbH*, 524 F.3d 1254, 1260 (Fed. Cir. 2008) (internal quotation marks omitted).

Furthermore, even if the claim is objectively baseless, it must be shown that lack of objective foundation for the claim "was either known or so obvious that it should have been known" by the party asserting the claim. *In re Seagate Tech., LLC*, 497 F.3d 1360, 1371 (Fed. Cir. 2007); *see also iLOR, LLC v. Google, Inc.*, 631 F.3d 1372, 1377 (Fed. Cir. 2011). This is known as the subjective prong of the inquiry. This same objective/subjective standard applies for both patentees asserting claims of infringement and alleged infringers defending against claims of infringement. *See iLOR*, 631 F.3d at 1377.

We have recently clarified that "the threshold objective prong . . . is a question of law based on underlying mixed questions of law and fact and is subject to *de novo* review." *Bard Peripheral Vascular, Inc. v. W.L. Gore & Assocs., Inc.*, No. 2010-1510, — F.3d —, 2012 WL 2149495, at *1 (Fed. Cir. June 14, 2012); *see also Powell v. Home Depot U.S.A., Inc.*, 663 F.3d 1221, 1236 (Fed. Cir. 2011). That determination must be made by the court as a matter of law rather than by the jury. We review the court's determination of objective reasonableness without deference since it is a question of law. *Bard*, 2012 WL 2149495, at *1.[1] With respect to the

---

[1] The dissent urges that *Bard* was wrongly decided in holding that de novo review was required. As explained in *Bard*, the objective reasonableness test was based on the objective prong

of the standard for sham litigation explained in *Professional Real Estate Investors, Inc. v. Columbia Pictures Industries, Inc.*, 508 U.S. 49 (1993). The Supreme Court in *Professional Real Estate* held that objective reasonableness in this context is an issue decided by the court as a matter of law. 508 U.S. at 63.

The dissent nonetheless urges that treating objective reasonableness as a question of law is inconsistent with *Cooter & Gell v. Hartmax Corp.*, 496 U.S. 384 (1990), and *Pierce v. Underwood*, 487 U.S. 552 (1988). These cases held that appeals courts must apply deferential standards of review to district court Rule 11 sanctions and determinations under the Equal Access to Justice Act ("EAJA") that a litigation position was "substantially justified." Rule 11 and EAJA are materially different from section 285, and the Supreme Court in *Cooter* and *Pierce* identified relevant distinguishing factors.

First, in *Pierce*, the Supreme Court recognized that where there is potential for a "substantial amount of [monetary] liability produced by the District Judge's decision," more "intensive[]" review by the appellate court is necessary. 487 U.S. at 563. Because the median award in EAJA cases was less than $3,000, deferential review was appropriate. Under section 285, however, the award of fees is routinely in the millions of dollars as it is here, thus supporting de novo review. Also in *Pierce*, the Court noted that the language of the EAJA statute itself "suggests some deference to the district court upon appeal," and recognizes deferential review where an agency awards fees. *Id.* at 559.

Second, while both Rule 11 and section 285 have both subjective and objective components, Rule 11 review is not easily separated into these separate components as is the standard under section 285. *See Cooter*, 496 U.S. at 401-02. Because deferential review is particularly appropriate as to the subjective determination, *see id.*, a deferential standard for the whole of Rule 11 is required. Under the *Brooks Furniture* standard, where the section 285 inquiry is easily divided into objective and subjective components, only the subjective prong is reviewed under a deferential standard.

Third, the inquiries under Rule 11 and EAJA look to the situation existing at the time a particular claim or representation was made, analyzing only the facts and law

subjective prong, "there is a presumption that an assertion of infringement of a duly granted patent is made in good faith." *Medtronic Navigation, Inc. v. BrainLAB Medizinische Computersyteme GmbH*, 603 F.3d 943, 954 (Fed. Cir. 2010). Thus, the subjective prong of *Brooks Furniture* must be established with clear and convincing evidence. [2]

---

present at that time determine whether the claim or representation was justified. Such inquiries are necessarily fact intensive. On the other hand, as explained below, the inquiry under the objective prong of *Brooks Furniture* is a retrospective assessment of the merits of the entire litigation and does not rely on the facts present at a particular time and is "based on the record ultimately made in the infringement proceedings." *Bard*, 2012 WL 2149495, at *4; *see also Seagate*, 497 F.3d at 1371 (stating that the objective prong is "determined by the record developed in the infringement proceeding"). In other words, the objective reasonableness determination does not require fact finding. The question is simply whether the record established in the proceeding supports a reasonable argument as to the facts and law.

Finally, the policy goals of sanctioning and deterring poor litigation practices present in *Cooter* (which suggest deference to the district court because it is best situated to achieve these goals) are not present here. *See* Fed. R. Civ. P. 11 advisory committee's note to 1993 amendments ("[T]he purpose of Rule 11 sanctions is to deter rather than to compensate . . . ."). The purpose of section 285, unlike that of Rule 11, is not to control the local bar's litigation practices—which the district court is better positioned to observe—but is remedial and for the purpose of compensating the prevailing party for the costs it incurred in the prosecution or defense of a case where it would be grosaly unjust, based on the baselessness of the suit or because of litigation or Patent Office misconduct, to require it to bear its own costs. *See Badalamenti v. Dunham's, Inc.*, 896 F.2d 1359, 1364 (Fed. Cir. 1990); *Cent. Soya Co., Inc. v. Geo. A. Hormel & Co.*, 723 F.2d 1573, 1578 (Fed. Cir. 1983).

[2] As *Seagate* noted, under the subjective prong, "to establish willful infringement, a patentee must show by clear and

iLOR, 631 F.3d at 1377; *see also Medtronic*, 603 F.3d at 954. We review factual findings as to subjective bad faith for clear error. *See Forest Labs.*, 339 F.3d at 1328; *see also Powell*, 663 F.3d at 1236.

II

Highmark contends that the *Brooks Furniture* objective reasonableness standard applies only with respect to the initial filing of the infringement counterclaim and does not apply to determining whether Allcare's continued litigation of baseless claims was frivolous. Appellee's Br. 41. That is not correct. Rather, the objective prong requires a retrospective assessment of the merits of the entire litigation determined "based on the record ultimately made in the infringement proceedings." *Bard*, 2012 WL 2149495, at *4 (directing the district court to determine in the first instance, "based on the record ultimately made in the infringement proceedings, whether a reasonable litigant could realistically expect [its positions] to succeed" (internal quotation marks omitted)); *iLOR*, 631 F.3d at 1378; *Seagate*, 497 F.3d at 1371 (stating that the objective prong is "determined by the record developed in the infringement proceeding"). The question is whether, in light of that record, "no reasonable litigant could realistically expect success on the merits." *Prof'l Real Estate Investors, Inc. v. Columbia Pictures Indus., Inc.*, 508 U.S. 49, 60 (1993). The objective prong is a single backwards-looking inquiry into the reasonableness of the claims in light of the full

---

convincing evidence that the infringer *acted despite* an objectively high likelihood that its actions constituted infringement of a valid patent." 497 F.3d at 1371 (emphasis added).

record. *See iLOR*, 631 F.3d at 1377-78 (citing *Brooks Furniture*, 393 F.3d at 1382).

Similarly, in considering a party's subjective state of mind, we are "to take into account the totality of circumstances." *Mach. Corp. of Am. v. Gullfiber AB*, 774 F.2d 467, 473 (Fed. Cir. 1985); *Forest Labs.*, 339 F.3d at 1330 (considering the record as a whole in determining whether the patentee maintained its infringement counterclaim in bad faith). Unlike the objective prong, which is a single retrospective look at the entire litigation, the subjective prong may suggest that a case initially brought in good faith may be continued in bad faith depending on developments during discovery and otherwise. *See Computer Docking Station Corp. v. Dell, Inc.*, 519 F.3d 1366, 1380 (Fed. Cir. 2008).

However, we apply the objective/subjective standard on a claim by claim basis. *ICU Med., Inc. v. Alaris Med. Sys., Inc.*, 558 F.3d 1368, 1379-81 (Fed. Cir. 2009) (affirming the district court's determination that the patentee's assertion of only one claim was objectively baseless and brought in bad faith); *see also Mathis v. Spears*, 857 F.2d 749, 761 (Fed. Cir. 1988). Because the rationale for awarding fees against a patentee for the filing of frivolous claims is "to reimburse the alleged infringer for defending an action improperly brought," *Mach. Corp.*, 774 F.2d at 474, in these situations attorneys' fees can only be shifted insofar as each claim is found frivolous, *see Mathis*, 857 F.2d at 761 (awarding attorneys' fees only for the frivolous claims); *see also Beckman*, 892 F.2d at 1554 (holding that when "one party prevails on some claims in issue while the other party prevails on other claims, this fact should

be taken into account when determining the amount of fees under § 285"). Thus, here we will treat separately the finding that infringement claim based on claim 102 rendered the case exceptional and the finding that the infringement claim based on claim 52 rendered the case exceptional. *See Carter v. ALK Holdings, Inc.*, 605 F.3d 1319, 1323-26 (Fed. Cir. 2010) (addressing separately whether each of three counts asserted by the plaintiff was frivolous).

A

The district court found that Allcare's claim 102 infringement litigation warranted an exceptional case finding. We agree.

Claim 102 is directed to "[a] method of managing an integrated health care management system." '105 patent col. 28 ll. 8-9. The key question with respect to claim 102 was whether the preamble term "integrated health care management system" was a claim limitation and, if so, whether it required patient and employer interaction. On appeal, Allcare contends that it was not unreasonable to argue that the preamble was not limiting or, if limiting, that it did not require patient and employer interaction.

The preamble of claim 102 clearly falls within those cases where the preamble is held to be limiting because the "limitations in the body of the claim rely upon and derive antecedent basis from the preamble." *Eaton Corp. v. Rockwell Int'l Corp.*, 323 F.3d 1332, 1339 (Fed. Cir. 2003). Here, claim 102's recitation of "said system" in elements (e) and (g) can only derive its antecedent basis from the "integrated health care management system" from the preamble. It is also clear from the specification that an "integrated health care management system"

required patient and employer interaction in addition to the participation of the health care provider and insurer. The patent specification begins by explicitly stating that "[t]his invention relates to managed health care systems . . . which integrate physicians, medical care facilities, patients, insurance companies and/or other health care payers, employers and bank and/or other financial institutions." '105 patent col. 1 ll. 1-11. The specification goes on to explain that "[t]he preferred embodiment of the present invention includes the *integrated interconnection and interaction* of the patient, health care provider, bank or other financial institution, utilization reviewer/case manager and employer." '105 patent col. 1 ll. 54-58 (emphasis added). In distinguishing the prior art in the background of the invention, the specification also explains that previous payment systems have not "included *integration of the active participation* by a patient's employer or inclusion of a patient's own available cash balances." '105 patent col. 1 ll. 44-47 (emphasis added). The invention was thus intended to "provide[] full integration of each of the aforementioned activities." '105 patent col. 1 ll. 50-51. Moreover, one of the objects of the invention is "to provide an integrated health care management system including *interactive participation* with patients' employers and banks." '105 patent col. 2 ll. 11-14.

Allcare agreed early in the case in a Joint Claim Construction statement that the preamble to claim 102 was limiting. *See* J.A. 5665 ("The parties also agree that the preamble term 'integrated health care management system' is construed as a claim limitation . . . ."). Indeed, Allcare's own proposed

construction of the preamble specified that the system "integrates (*i.e.*, . . . includes) physicians, medical care facilities, *patients*, insurance companies and/or other health care payers, *employers* and banks and/or other financial institutions." *Claim Construction Report*, slip op. at 43-44 (emphases added). Allcare thus contemplated that an integrated health care management system somehow required interaction with patients and employers. Even now, Allcare offers no plausible arguments that the preamble should not have been limiting or that it did not require patient and employer interaction.

There was also no plausible argument that Highmark's method involved the interconnection and interaction of patients and employers as was required by claim 102. Allcare's expert even conceded as much during deposition. J.A. 22885.[3] Allcare has not even argued that Highmark's method included such interaction. Thus, Allcare's infringement claims with respect to claim 102 were objectively unreasonable.

Allcare also argues on appeal that its infringement allegations with respect to claim 102 do not warrant an exceptional case finding because they were not brought in subjective bad faith. A claim is brought

---

[3] Q. How does the employee/member [i.e., patient] interact with the bank in the Highmark system?

A. The employee—from the information that I read, the employee does not appear to interact with the bank. . . .

Q. Is there any interaction between the employee/member and the employer in Highmark's system?

A. The employer—interaction between the employee and the employer in the Highmark system, based on my—my opinion is without my report no.

in subjective bad faith if the objective unreasonableness of the claim "was either known or so obvious that it should have been known" by the patentee. *See Seagate*, 497 F.3d at 1371. That is clearly so here. Allcare knew or should have known that its allegation of infringement of claim 102 was unreasonable, and this is not a situation in which Allcare acted in good faith at the inception of the litigation, but because of later developments acted in bad faith in continuing the litigation.

To be sure, even where infringement allegations are objectively unreasonable, a patentee may have reason to believe that its allegations are supportable so as to negate a finding of bad faith.[4] But here, Allcare has made no such showing at any point in the litigation. Allcare points only to a survey of health care management and insurance organizations regarding their medical authorization and claims payment systems performed by Seaport Surveys, Inc. ("Seaport") to demonstrate that it had reason to believe its infringement allegations with respect to claim 102 were supportable. Allcare,

---

[4] Thus, for example, an adequate pre-filing investigation may negate a claim of bad faith. The district court here found that Allcare did not conduct an adequate pre-filing investigation. Since we have concluded that Allcare engaged in bad faith from the inception—because it knew or should have known that the allegation of infringement of claim 102 was frivolous—we need not examine the pre-filing investigation. Furthermore, apart from the section 285 inquiry, failure to conduct an adequate pre-filing investigation, in some circumstances, independently supports an award of attorneys' fees under Rule 11. *See Hoffmann-La Roche Inc. v. Invamed Inc.*, 213 F.3d 1359, 1363 (Fed. Cir. 2000). Here, the district court did not sanction Allcare under Rule 11 for its failure to conduct an adequate pre-filing investigation.

however, never demonstrated how the survey (or anything else in the record) supported its claim construction position with respect to claim 102. The survey also did not show that Highmark was infringing under the correct claim construction. The district court did not clearly err in concluding that Allcare's claim 102 allegations were brought in subjective bad faith.

Allcare also argues that the district court's vacating sanctions against Allcare's attorneys is inconsistent with the district court's exceptional case finding against All-care. This is incorrect. A lack of sanctions against attorneys is not in itself a ground for barring sanctions against a client. Rule 11 sanctions against an attorney may form a basis for an exceptional case finding. *See Brooks Furniture*, 393 F.3d at 1381 ("A case may be deemed exceptional when there has been some material inappropriate conduct related to the matter in litigation, such as . . . conduct that violates Fed. R. Civ. P. 11 . . . ."). But the absence of Rule 11 sanctions does not mandate the opposite conclusion. Allcare also contends that new evidence brought up during the reconsideration of Rule 11 sanctions mandates reversal of the exceptional case finding. However, the additional evidence relied on by the district court in vacating the Rule 11 sanctions had no bearing on the interpretation of claim 102 or Allcare's knowledge of whether Highmark's systems were infringing. The district court thus did not clearly err in concluding that Allcare's allegations of infringement of claim 102 warranted an exceptional case finding.

B

We reach a different conclusion with respect to the claim 52 infringement claims because we conclude that Allcare's position was not objectively unreasonable. Highmark's theory is that it did not infringe because it did not satisfy element (c) of claim 52. Element (c) requires "entering . . . data symbolic of patient symptoms for tentatively identifying a proposed mode of treatment . . . ." '105 patent col. 21 ll. 31-34. It was not disputed that this limitation covered the patent's preferred embodiment—what the parties refer to as a "diagnostic smart system"—which automatically generates a list of recommended treatments based on the patient symptoms reported by the healthcare providers. J.A. 11584. The question was whether this limitation was also met where a physician enters both the symptoms and the proposed diagnosis or treatment as done in Highmark's system, referred to as a traditional "utilization review smart system," i.e., a system which does not automatically generate treatment options. The district court found that it did not, and we affirmed.

The district court's exceptional case finding with respect to claim 52 centered on Allcare's lack of basis for its claim construction position. Allcare's position was that claim 52 covered systems where the physician entered both the "data symbolic of patient symptoms" and the "proposed mode of treatment," and the system did not automatically propose a treatment. While the claim language "entering . . . data symbolic of patient symptoms for tentatively identifying a proposed mode of treatment" favors the

construction ultimately adopted by the district court, it does not foreclose Allcare's construction.

Under *Phillips v. AWH Corp.*, 415 F.3d 1303, 1315 (Fed. Cir. 2005) (en banc), we must also look to the specification. There was support in the specification for Allcare's position. With respect to the entry of symptoms and treatments, the specification discloses essentially two embodiments. In the preferred embodiment, a physician first facilitates "the entry of symptoms or other data which can assist in making a diagnosis and identifying . . . recommended treatment protocols." '105 patent col. 9 ll. 58-60. The system then "correlat[es] the observed patient symptoms and test results so as to identify the most likely causes of the health problem," as well as "the most appropriate treatment protocols." '105 patent col. 9 ll. 61-65. The specification states that the system will only "prepare[] a list of the most likely medical condition . . . [and] the generally approved and/or recommended treatment protocols" when it is "requested" from the system. '105 patent col. 6 ll. 64-67. This is what has been referred to as the "diagnostic smart system."

But the specification also discloses an embodiment where, in addition to entering symptom and diagnosis data, "[t]he physician or staff member enters into the System data identifying the proposed pattern of treatment." '105 patent col. 10 ll. 3-5. Thereafter, "the System compares the proposed pattern of treatment with . . . recommended treatment protocols and provides an indication of any problem differences." '105 patent col. 10 ll. 5-8. Thus, as the special master recognized, a diagnosis can be made "with or without the assistance of the

diagnostic smart system," and the physician can be the one to "enter[] into the system data identifying the proposed treatment." *Claim Construction Report*, slip op. at 3.

We ultimately agreed with the district court that the language of claim 52, and particularly element (c) ("entering . . . data symbolic of patient symptoms for tentatively identifying a proposed mode of treatment"), did not cover the embodiment where the physician entered the symptoms and the proposed treatment. But it was not unreasonable for Allcare to argue that the language of the claim encompassed both embodiments. While Allcare may not have pointed to the specification as an argument in support of its theory, this theory as to the scope of claim 52 was argued repeatedly by Allcare.[5] As we held in *iLOR*, "simply being wrong about claim construction should not subject a party to sanctions where the construction is not objectively baseless." 631 F.3d at 1380. This is not a case where the claim language was not subject to an alternate construction or where "the specification and prosecution history clearly refute [the patentee's] proposed claim construction." *MarcTec, LLC v. Johnson & Johnson*, 664 F.3d 907, 919 (Fed. Cir. 2012). Allcare's argument with respect to this

---

[5] *See Yee v. City of Escondido*, 503 U.S. 519, 534 (1992) (holding that where an issue has been properly presented, on appeal "parties are not limited to the precise arguments they made below"); *Interactive Gift Express, Inc. v. Compuserve Inc.*, 256 F.3d 1323, 1347 (Fed. Cir. 2001) (holding that although a party cannot change the scope of its claim construction on appeal, it is not precluded "from proffering additional or new supporting arguments, based on evidence of record, for its claim construction").

element was not "so unreasonable that no reasonable litigant could believe it would succeed." *See iLOR*, 631 F.3d at 1378.

The burden was on the party seeking sanctions (Highmark) to establish that under this alternative claim construction, the allegations of infringement were objectively unreasonable. There was no showing by Highmark that it would not infringe under an alternate construction of claim 52 covering the system where the physician enters the proposed treatment.

Because we conclude that Allcare's allegations of infringement of claim 52 were not objectively baseless, we need not reach the question of whether Allcare acted in subjective bad faith. *See Old Reliable Wholesale, Inc. v. Cornell Corp.*, 635 F.3d 539, 547 n.4 ("When making a section 285 fee award, subjective considerations of bad faith are irrelevant if the challenged claims or defenses are not objectively baseless."); *see also Prof'l Real Estate Investors*, 508 U.S. at 60 ("Only if challenged litigation is objectively meritless may a court examine the litigant's subjective motivation."). We therefore reverse the district court's conclusion that Allcare's allegations of infringement of claim 52 support an exceptional case finding.[6]

---

[6] Highmark appears to argue that an exceptional case finding is justified here because Allcare failed to make an adequate pre-filing investigation as required by Rule 11. Our cases have not always been clear as to whether the failure to make an adequate pre-filing investigation under Rule 11 can support an exceptional case finding when the *Brooks Furniture* test has not been satisfied, and it would be a most unusual case in which the infringement case was objectively reasonable but the pre-filing investigation was unreasonable. We need not decide

III

Quite apart from the frivolity of the alleged infringement claims, an exceptional case finding can also be supported by litigation misconduct. *MarcTec*, 664 F.3d at 919 ("[I]t is well-established that litigation misconduct and 'unprofessional behavior may suffice, by themselves, to make a case exceptional under § 285.'" (quoting *Rambus Inc. v. Infineon Techs. AG*, 318 F.3d 1081, 1106 (Fed. Cir. 2003))); *Brooks Furniture*, 393 F.3d at 1381 ("A case may be deemed exceptional when there has been . . . misconduct during litigation, . . . conduct that violates Fed. R. Civ. P. 11, or like infractions."). "Litigation misconduct generally involves unethical or unprofessional conduct by a party or his attorneys during the course of adjudicative proceedings," and includes advancing frivolous arguments during the course of the litigation or otherwise prolonging litigation in bad faith. *See Old Reliable*, 635 F.3d at 549; *Computer Docking Station Corp.*, 519 F.3d at 1379. A finding of exceptionality based on litigation misconduct, however, usually does not support a full award of attorneys' fees. *See Beckman*, 892 F.2d at 1553-54. Instead, the fee award "must bear some relation to the extent of the misconduct," *Special*

---

whether such a finding with respect to the pre-filing investigation could ever support an exceptional case finding because the district court made no finding of a Rule 11 violation with respect to Allcare as opposed to its attorneys, and the Rule 11 violation found with respect to the Allcare attorneys was vacated. As we read the district court opinion, sanctions here were based on a finding that Allcare's claim construction was frivolous, and were not based on any finding that Allcare failed to investigate whether under its proposed claim construction Highmark infringed.

Devices, 269 F.3d at 1344 (quoting *Read Corp. v. Portec, Inc.*, 970 F.2d 816, 831 (Fed. Cir. 1992)), and compensate a party for the "*extra* legal effort to counteract the[] misconduct," *Beckman*, 892 F.2d at 1553.

Here, in addition to determining that Allcare's overall infringement allegations were frivolous, the district court found the case exceptional based on three primary instances of alleged litigation misconduct: (1) asserting a frivolous position based on *res judicata* and collateral estoppel; (2) shifting the claim construction position throughout the course of the proceedings before the district court; and (3) making misrepresentations to the Western District of Pennsylvania in connection with a motion to transfer venue. None of these actions is sufficient to make this case exceptional under section 285.

A

We consider first whether Allcare engaged in litigation misconduct by making frivolous arguments. In evaluating the frivolity of particular arguments made during the course of the litigation, the arguments must be shown to be at least objectively unreasonable. Thus, under section 285 a party cannot be sanctioned for making frivolous arguments during the course of the litigation if the arguments themselves were not objectively unreasonable at the time they were made. *DePuy Spine, Inc. v. Medtronic Sofamor Danek, Inc.*, 567 F.3d 1314, 1339 (Fed. Cir. 2009) ("Although the district court ultimately concluded that the underlying substance of Medtronic's defense 'lacks merit,' there is no indication, much less a finding, that Medtronic's arguments were baseless, frivolous, or intended

primarily to mislead the jury. Although the defense ultimately failed, Medtronic should not have been sanctioned for merely raising it . . . ."). We determine whether a particular argument was objectively unreasonable without deference to the district court's determination. *See Bard*, 2012 WL 2149495, at *1.[7]

This issue arises from the following circumstances. Before initiating suit against Highmark, Allcare filed suit against Trigon, a Blue Cross Blue Shield insurance provider like Highmark, in the Eastern District of Virginia, also asserting various claims of the '105 patent. As part of the *Trigon* action, the court issued rulings construing some of the disputed claim limitations, primarily in claim 52, in a manner favorable to Allcare. In answering Highmark's complaint, Allcare contended that based on the Blue Cross Blue Shield relationship between Highmark and Trigon, and based on Highmark's knowledge of and participation in the *Trigon* action, Highmark was bound under principles of *res judicata* and collateral estoppel to the district court's rulings in that action. Allcare's theory was one of "virtual representation." However, after Allcare met-and-conferred with Highmark and learned that there was only a limited relationship between Highmark and Trigon, Allcare promptly withdrew the argument.

---

[7] If instead of relying on section 285 the district court imposed sanctions for frivolous arguments under Rule 11, we would apply Rule 11 standards and the deferential standard of review from *Cooter*, 496 U.S. at 405. But here the district court vacated sanctions under Rule 11 standards and imposed them under only section 285.

Although the Supreme Court later "disapprove[d] the doctrine of preclusion by 'virtual representation,'" *Taylor v. Sturgell*, 553 U.S. 880, 885 (2008), at the time Allcare asserted the defense it was not wholly without merit. The doctrine of virtual representation was "equitable and fact-intensive" in nature, with "no clear test for determining the applicability of the doctrine." *Tyus v. Schoemehl*, 93 F.3d 449, 455 (8th Cir. 1996). Indeed, the doctrine was unsettled and varied widely in application from circuit to circuit. *Compare id.* at 455-56 (describing a seven-factor test for finding virtual representation), *with Klugh v. United States*, 818 F.2d 294, 300 (4th Cir. 1987) (holding that a party is "a virtual representative" only if the party is accountable to the nonparties who file subsequent suit and has "the tacit approval of the court" to act on the nonparties' behalf). Due to the relationship and similarities between Highmark and Trigon, and Highmark's knowledge of and participation in the *Trigon* action, Allcare had at least some support for its initial contention that Trigon was a virtual representative of Highmark. Thus, it was not objectively unreasonable for Allcare to initially assert this legal argument. When Allcare received information from Highmark regarding the limited relationship between Highmark and Trigon and Highmark's limited involvement in the *Trigon* action, thus leading Allcare to believe it would be unsuccessful in its preclusion argument, it promptly withdrew it. This is not a proper basis for finding the case exceptional under section 285. The district court clearly erred by finding that Allcare's brief assertion of this position warrants an exceptional case finding.

B

Highmark also argues that Allcare's "shifting claim construction" with respect to element 52(c) was improper and warrants an exceptional case finding. Allcare originally proposed the following claim construction for the two key (underscored) elements of element 52(c):

> *Data symbolic of symptoms for tentatively identifying*: "any information, coded or otherwise, reflecting a patient's health, reason for visit or condition, *e.g.*, symptoms, test results and other data, that is relevant to diagnosis and treatment by a care provider, including but not limited to ICD disease codes."
>
> *Tentatively identifying a proposed mode of treatment*: "the act or process of determining the treatment that is appropriate, subject to later amendment or confirmation."

J.A. 11953-54. Allcare later combined the two key elements and proposed that element 52(c) be construed as

> one or more items of information representative of a sign of disorder or disease with a view toward, as concerns or corresponding to, provisionally putting forth a suggested method of the application of remedies or therapies to a patient for a disease or injury.

J.A. 11954. Allcare again adjusted its proposed claim construction to

> information expressed in a symbolic or representative manner pertaining to the evidence of disease or changes in the physical

> condition of a patient, with a view toward, as concerns or corresponding to, provisionally *putting forth* a suggested method of the application of remedies or therapies to a patient for a disease or injury.

J.A. 11954 (emphasis added). Finally, Allcare redrafted its construction of "tentatively identifying a proposed mode of treatment" to be "provisionally (*i.e.*, non-finally) *naming or recognizing* a suggested method of treatment." J.A. 23006 (emphasis added).

These linguistic shifts in the proposed claim construction are insufficient to constitute litigation misconduct and an exceptional case finding. The constructions proffered by Allcare do not differ in substance. Each demonstrated that it was Allcare's position that the claims were not limited to diagnostic smart systems and that there was no "cause-and-effect" relationship between the entering of symptoms and the automatic identification of the treatment. Allcare's position on this point never changed. Highmark does not cite any authority to support its position that minor word variations in claim construction positions, where the substance of the claim construction does not change, are sanctionable. We also note that some of Allcare's resubmissions of claim construction positions and arguments to the district court were the result of this court's en banc decision in *Phillips*, which issued while the claim construction issues were pending before the district court. Indeed, Highmark itself conceded that new claim construction briefs in light of *Phillips* were desirable and would benefit the district court. *See* Order Striking Claim-Construction Motion and Related Filings, Directing

an Amended Claim-Construction Motion, and Rendering Moot Related Filings and Motions, *Highmark, Inc. v. Allcare Health Mgmt. Sys., Inc.*, No. 4:03-CV-1384-Y (N.D. Tex. Aug. 12, 2005), ECF No. 282. Again, the district court clearly erred in finding that Allcare's minor changes in claim construction support an exceptional case finding under section 285.

C

Finally, the district court found that misrepresentations made before the Western District of Pennsylvania in connection with a motion to transfer venue supported an exceptional case finding. After Highmark initiated suit in the Western District of Pennsylvania, Allcare sought to transfer the case to the Northern District of Texas. The issue was personal jurisdiction. Highmark contended that Allcare had sufficient contacts with Pennsylvania for personal jurisdiction based in part on a survey it commissioned to locate potential infringers, which led to survey calls to companies in Pennsylvania. Allcare argued that this was not a sufficient "contact" for purposes of personal jurisdiction. Allcare contended that the survey was not such a contact because Allcare "did not control the manner in which Seaport Surveys, an independent contractor, went about *completing* the surveys." *Exceptional Case Order*, 706 F. Supp. 2d at 734 (internal quotation marks omitted). Allcare also contended that it "did not control how Seaport Surveys carried out its surveys, nor did it dictate what companies Seaport opted to call upon." *Id.* In finding this case exceptional, the district court found that these statements were misrepresentations

because, although no Allcare employees participated in the actual survey calls, "Allcare participated in and, indeed, controlled every other aspect of the survey." *Id.* This included designing the initial questionnaire, providing a supplemental questionnaire, and effectively controlling which companies were to be interviewed. Thus, the district court found that Allcare's representations to the Western District of Pennsylvania related to its motion to transfer were "at best obfuscatory and [] strain[ed] the bounds of zealous advocacy." *Id.* at 735.

The district court erred in finding the case exceptional based on these representations. As recognized by the district court in vacating Rule 11 sanctions against the attorneys, "if any court were to issue sanctions based on the [transfer] motion, it would be most appropriate for the Western District of Pennsylvania to do so." Opinion and Order Reconsidering and Vacating Sanctions, *Highmark, Inc. v. Allcare Health Mgmt. Sys., Inc.*, No. 4:03-CV-1384-Y, slip op. at 41 (N.D. Tex. Aug. 9, 2010). Indeed, a court generally should sanction "conduct beyond that occurring in trial [only] when a party engages in bad-faith conduct which is in direct defiance *of the sanctioning court.*" *FDIC v. Maxxam, Inc.*, 523 F.3d 566, 591 (5th Cir. 2008) (internal quotation marks omitted); *see also Chambers v. NASCO, Inc.*, 501 U.S. 32, 57 (1991). The district court offered no justification for sanctioning conduct before a different tribunal. On appeal, Highmark likewise offered no authority for the issuance of sanctions for conduct that occurs solely before another tribunal. Thus, these supposed

misrepresentations do not support an exceptional case finding.

* * *

We therefore affirm the district court's finding that Allcare's allegations of infringement of claim 102 rendered the case exceptional under section 285 and reverse the district court's finding that Allcare's other claims and actions supported an exceptional case finding. Because the district court did not determine the amount of attorneys' fees apportionable to each of the above issues, a remand is necessary. *See Molins PLC v. Textron, Inc.*, 48 F.3d 1172, 1186 (Fed. Cir. 1995) (remanding for a calculation of attorneys' fees based on the court's partial reversal of the underpinnings of the exceptional case finding). We remand this case to the district court for a calculation of attorneys' fees based on the frivolity of the claim 102 allegations only.

Affirmed in part, reversed in part, and remanded.

MAYER, *Circuit Judge*, dissenting-in-part.

The court errs when it says that no deference is owed to a district court's finding that the infringement claims asserted by a litigant at trial were objectively unreasonable. *See Ante* at 9 ("We review the [district] court's determination of objective reasonableness without deference since it is a question of law."). When reviewing an exceptional case determination under 35 U.S.C. § 285, reasonableness is a finding of fact which may be set aside only for clear error. *See Eon-Net LP v. Flagstar Bancorp*, 653 F.3d 1314, 1324 (Fed. Cir.

2011) ("When reviewing an exceptional case finding for clear error, we are mindful that the district court has lived with the case and the lawyers for an extended period. Having only the briefs and the cold record, and with counsel appearing before us for only a short period of time, we are not in the position to second-guess the trial court's judgment."). Applying this highly deferential standard of review, there is no basis for overturning the trial court's determination that the infringement counterclaims brought by Allcare Health Management Systems, Inc. ("Allcare") against Highmark, Inc. ("Highmark") were frivolous. I would affirm the district court's award of attorney fees and expenses in its entirety.

I.

Congress created this court in 1982 with the goal of promoting greater uniformity in the interpretation and application of the nation's patent laws. *See Markman v. Westview Instruments, Inc.*, 517 U.S. 370, 390 (1996) ("Congress created the Court of Appeals for the Federal Circuit as an exclusive appellate court for patent cases, observing that increased uniformity would strengthen the United States patent system in such a way as to foster technological growth and industrial innovation." (citations and internal quotation marks omitted)). The fact that we have been vested with exclusive appellate jurisdiction in patent cases does not, however, grant us license to invade the fact-finding province of the trial courts. Our increasing infatuation with de novo review of factual determinations began with claim construction, *see Cybor Corp. v. FAS Techs., Inc.*, 138 F.3d 1448, 1455-56 (Fed. Cir. 1998) (en banc), and has now infected review of both

willful infringement, *see Bard Peripheral Vascular, Inc. v. W.L. Gore & Assocs., Inc.*, No. 2010-1510, 2012 WL 2149495, at *1 (Fed. Cir. June 14, 2012), and section 285 exceptional case determinations. As a result of this appellate overreaching, litigation before the district court has become a mere dress rehearsal for the command performance here. *See Phillips v. AWH Corp.*, 415 F.3d 1303, 1334 (Fed. Cir. 2005) (en banc) (Mayer J., dissenting) ("If we persist in deciding the subsidiary factual components of claim construction without deference, there is no reason why litigants should be required to parade their evidence before the district courts or for district courts to waste time and resources evaluating such evidence."). Encouraging relitigation of factual disputes on appeal is an enormous waste of the litigants' resources and vitiates the critically important fact-finding role of the district courts. *See Anderson v. City of Bessemer City*, 470 U.S. 564, 575 (1985) ("[T]he parties to a case on appeal have already been forced to concentrate their energies and resources on persuading the trial judge that their account of the facts is the correct one; requiring them to persuade three more judges at the appellate level is requiring too much.").

Absent misconduct during litigation or when securing a patent, sanctions under section 285 may be awarded only if a two-prong test is satisfied: (1) the litigation is brought in subjective bad faith; and (2) it is objectively baseless. *Old Reliable Wholesale, Inc. v. Cornell Corp.*, 635 F.3d 539, 543 (Fed. Cir. 2011). The objective baselessness standard under section 285 "is identical to the objective recklessness standard for enhanced damages" in the willful infringement context. *iLOR,*

LLC v. Google, Inc., 631 F.3d 1372, 1377 (Fed. Cir. 2011). Until *Bard*, 2012 WL 2149495, at *1, this court had correctly applied a highly deferential "clear error" standard of review to the factual underpinnings of an exceptional case determination. *See Nilssen v. Osram Sylvania, Inc.*, 528 F.3d 1352, 1357 (Fed. Cir. 2008) ("We review a finding that a case is 'exceptional' within the meaning of 35 U.S.C. § 285 for clear error."); *Q-Pharma, Inc. v. Andrew Jergens Co.*, 360 F.3d 1295, 1299 (Fed. Cir. 2004) ("We review a denial of attorney fees under 35 U.S.C. § 285 for an abuse of discretion; however, we review the factual determination whether a case is exceptional under § 285 for clear error."); *Forest Labs., Inc. v. Abbott Labs.*, 339 F.3d 1324, 1328 (Fed. Cir. 2003) (emphasizing that this court reviews a trial "court's factual findings, including whether the case is exceptional, for clear error"); *Brasseler, U.S.A. I., L.P. v. Stryker Sales Corp.*, 267 F.3d 1370, 1378 (Fed. Cir. 2001) ("Whether a case is 'exceptional,' in accordance with 35 U.S.C. § 285, is a question of fact."). *Bard*, however, rejected this approach, concluding that whether a litigant's conduct was objectively reasonable is a question of law subject to de novo review. *See* 2012 WL 2149495, at *1. Because *Bard* usurps the fact-finding role of the trial courts and is plainly inconsistent with our precedent it is an outlier and of no precedential value. We are bound to follow the standard of review articulated in earlier decisions. *See Johnston v. IVAC Corp.*, 885 F.2d 1574, 1579 (Fed. Cir. 1989) ("Where conflicting statements . . . appear in our precedent, the panel is obligated to review the cases and reconcile or explain the statements, if possible. If not reconcilable and if not

merely conflicting dicta, the panel is obligated to follow the earlier case law which is the binding precedent."). The law of this circuit can only be superseded by the court en banc. *See Sacco v. Dep't of Justice*, 317 F.3d 1384, 1386 (Fed. Cir. 2003).

Bard is simply wrong when it concludes that a determination of whether conduct is objectively reasonable is a question of law subject to de novo review. *See* 2012 WL 2149495, at *2. To the contrary, the question of what constitutes reasonable conduct under varying circumstances is a quintessentially factual inquiry. Indeed, the Supreme Court has acknowledged that reasonableness is a question of fact by recognizing "the jury's unique competence in applying the 'reasonable man' standard." *TSC Indus. v. Northway, Inc.*, 426 U.S. 438, 450 n.12 (1976). This court, too, has recognized that the reasonableness of a litigant's conduct is a factual question. *See Nat'l Presto Indus., Inc. v. W. Bend Co.*, 76 F.3d 1185, 1193 (Fed. Cir. 1996) ("Whether the infringer had a reasonable belief that the accused activity did not violate the law is a question of fact, as are other questions relevant to the issue of willfulness." (citations omitted)); *see also Rand v. Underwriters at Lloyd's*, 295 F.2d 342, 346 (2nd Cir. 1961) (emphasizing that "when dissimilar inferences may be drawn from undisputed facts, or when the facts are in dispute, 'reasonableness' is a jury question"). As an appellate court, we are ill-suited to weigh the evidence required to make an exceptional case determination. In many cases, a trial court will declare a case exceptional only after spending months—and sometimes even years—reviewing the evidence, hearing testimony, and evaluating the

conduct of the litigants. Its intimate familiarity with the facts of the case, and the parties involved, place it in a far superior position to judge whether or not a litigant's claims of infringement were objectively baseless:

> The district judge is a firsthand observer of the proceedings below. His is the view from the trenches: he sees the shots fired by one party against the other, and he has full knowledge of the circumstances prompting the cross-fire. . . . Since the imposition of sanctions will usually require [an] intensive inquiry into the factual circumstances surrounding an alleged violation, the trial judge is in the best position to review [those] circumstances and render an informed judgment.

Kale v. Combined Ins. Co., 861 F.2d 746, 758 (1st Cir. 1988) (citations and internal quotation marks omitted).

Bard's assertion that objective reasonableness is a question of law is anomalous given that the exceptional nature of the case must be established by clear and convincing evidence. *See Wedgetail, Ltd. v. Huddleston Deluxe, Inc.*, 576 F.3d 1302, 1304 (Fed. Cir. 2009). The clear and convincing evidence standard applies to questions of fact, not to questions of law. *See, e.g., Star Scientific, Inc. v. R.J. Reynolds Tobacco Co.*, 537 F.3d 1357, 1366 (Fed. Cir. 2008) ("The predicate facts must be proven by clear and convincing evidence." (citations and internal quotation marks omitted)). Furthermore, the *Bard*

approach is unnecessarily complex [1] and will undoubtedly spawn unneeded litigation over which issues in a section 285 determination are issues of fact, which are issues of law, and which are mixed questions of law and fact. *See Cooter & Gell v. Hartmarx Corp.*, 496 U.S. 384, 401 (1990) (explaining that there is no "rule or principle that will unerringly distinguish a factual finding from a legal conclusion," and that "[m]aking such distinctions is particularly difficult" in the context of attorney fee awards (citations and internal quotation marks omitted)).

Although the Supreme Court has not yet spoken on the appropriate standard of review applicable to section 285 exceptional case determinations, it has made clear that a highly deferential standard of review applies in analogous proceedings brought under Rule 11 of the Federal Rules of Civil Procedure. *See Cooter*, 496 U.S. at 399-405. Prior to *Cooter*, some circuit courts of appeals had divided review of Rule 11 sanctions into three separate analyses, reviewing fact-findings under a clearly

---

[1] As a practical matter, the *Bard* approach will be difficult and time-consuming to apply. *Bard* instructs:

> In considering the objective prong of [*In re Seagate Tech., LLC*, 497 F 3d 1360 (Fed. Cir. 2007) (en banc)], the judge may when the defense is a question of fact or a mixed question of law and fact allow the jury to determine the underlying facts relevant to the defense in the first instance, for example, the questions of anticipation or obviousness. But . . . the ultimate legal question of whether a reasonable person would have considered there to be a high likelihood of infringement of a valid patent should always be decided as a matter of law by the judge.

Bard, 2012 WL 2149495, at *4.

erroneous standard, legal questions under a de novo standard, and the actual sanction decision for abuse of discretion. *Id.* at 399. The Supreme Court rejected this approach, concluding that although Rule 11 determinations involve both factual and legal issues, all aspects of such a determination must be reviewed under a highly deferential abuse of discretion standard. *Id.* at 405. In the Court's view, application of a deferential standard was appropriate because "the district court [was] better situated than the court of appeals to marshal the pertinent facts and apply the fact-dependent legal standard mandated by Rule 11." *Id.* at 402. Significantly, the Court rejected the view that a determination as to whether a litigant's conduct was reasonable must be reviewed by an appellate court de novo. *Id.* at 405 ("An appellate court's review of whether a legal position was reasonable or plausible enough under the circumstances is unlikely to establish clear guidelines for lower courts; nor will it clarify the underlying principles of law." (citations and internal quotation marks omitted)). Similarly, in the context of fee awards under the Equal Access to Justice Act ("EAJA"), 28 U.S.C. § 2412(d), the Supreme Court has determined that a deferential abuse of discretion standard applies, even though an EAJA award turns on the question of whether the government's litigation position had a "reasonable basis both in law and fact." *Pierce v. Underwood*, 487 U.S. 552, 565 (1988).

Bard offers no persuasive explanation as to why the highly deferential standard of review adopted in *Cooter* and *Pierce* should not apply to section 285 exceptional case determinations. Simply because the section 285 analysis can touch on issues of patent

validity and infringement does not mean that this court can shirk our obligation to afford due deference to the better-informed judgment of the trial court on factual matters. *See Pullman-Standard v. Swint*, 456 U.S. 273, 287 (1982) (Rule 52(a) of the Federal Rules of Civil Procedure "does not make exceptions or purport to exclude certain categories of factual findings from the obligation of a court of appeals to accept a district court's findings unless clearly erroneous.").

II.

Here, the trial court, in a thorough and well-reasoned opinion, concluded that Allcare engaged in "vexatious and, at times, deceitful conduct" and "maintained infringement claims well after such claims had been shown by its own experts to be without merit." *Highmark, Inc. v. Allcare Health Mgmt. Sys., Inc.*, 706 F. Supp. 2d 713, 737 (N.D. Tex. 2010). The court found that Allcare failed to conduct any sort of reasonable pre-filing investigation before asserting its infringement counterclaims against Highmark. *Id.* at 723-27. Robert Shelton, Allcare's vice-president, ignored persuasive, publically-available evidence[2] which clearly demonstrated that

---

[2] "[B]y all accounts a large amount of information regarding Highmark's system was available publicly. Allcare even discovered a demonstration version of Highmark's system complete with a representative user interface. This interface displayed what code was used by Highmark's system . . . and what the code was used for (to indicate symptoms rather than to determine a proposed treatment)." *Highmark*, 706 F. Supp. 2d at 725 (citations omitted). Had Allcare conducted an even minimal investigation of publically available information regarding the Highmark system, it would have discovered that that system did not meet claim 52(c)'s requirement that

Highmark's accused system failed to meet key elements of claim 52(c) of U.S. Patent No. 5,301,105 (the "'105 patent"). Claim 52(c) specifically requires "entering . . . data symbolic of patient symptoms *for* tentatively identifying a proposed mode of treatment." '105 patent col. 21 ll. 31-34 (emphasis added). In Highmark's accused system, however, a physician or other medical professional enters both the symptoms and the proposed diagnosis and treatment options. Thus, symptom data is not entered "for" the purpose of "identifying a proposed mode of treatment" as required by claim 52(c). Indeed, Allcare's own expert acknowledged that in the Highmark system symptom data was entered to identify the condition for which the patient was already receiving treatment and *not* "for" the purpose of identifying the proposed mode of treatment. *See* Joint App'x 11586-88; *Highmark*, 706 F. Supp. 2d at 731 ("Allcare's allegations were shown to be without support by its own expert's report and deposition testimony. Yet Allcare persisted in its infringement allegations."). Given that Allcare persisted in advancing infringement allegations that were both in direct conflict with the plain claim language and unsupported by the testimony of its own expert, the district court had ample grounds for concluding that Allcare's allegations of infringement of claim 52(c) were frivolous.[3] Because there was no clear error in the

---

symptom data is entered "for" the purpose of "identifying a proposed mode of treatment." '105 patent col. 21 ll. 31-34.

[3] The court errs when it concludes that an embodiment disclosed in the specification provided reasonable support for Allcare's allegation that the Highmark system met the limitations of claim 52(c). That embodiment plainly did not

trial court's exceptional case determination, its section 285 award must be affirmed.

III.

Finally, it is worth noting that the infringement trial in this case occurred prior to the Supreme Court's decisions in *Bilski v. Kappos*, 130 S. Ct. 3218 (2010), and *Mayo Collaborative Servs. v. Prometheus Labs., Inc.*, 132 S. Ct. 1289 (2012). Had the trial court had the benefit of these decisions, it could have applied 35 U.S.C. § 101 to invalidate Allcare's '105 patent at the summary judgment stage of the proceedings. *See Bilski*, 130 S. Ct. at 3225 (noting that whether claims are directed to statutory subject matter is a "threshold test").

"[T]he patent system represents a carefully crafted bargain that encourages both the creation and the public disclosure of new and useful advances in technology, in return for an exclusive monopoly for a limited period of time." *Pfaff v. Wells Elecs., Inc.*, 525 U.S. 55, 63 (1998). A patentee does not uphold his end of this "bargain" if he seeks broad monopoly rights over a basic concept, fundamental principle, or natural law without a concomitant contribution to the existing body of scientific and technological knowledge. In *Bilski*, an application was rejected as patent ineligible because it did not "add" anything to the basic concept of hedging against economic risk. 130 S. Ct. at 3231 (emphasizing that the application applied the concept of hedging using "well-known random analysis techniques"). In *Mayo*, likewise,

---

describe a system in which the physician enters symptoms "for" the purposes of identifying a method of treatment, *see* '150 patent col. 10 ll. 5-8, and was therefore not covered by claim 52(c).

process claims were invalidated under section 101 because they simply described a law of nature and applied it using "well-understood, routine, [and] conventional" means. 132 S. Ct. at 1294.

A similar analysis applies here. Allcare's claimed diagnostic system falls outside the ambit of section 101 because it is directed to the "abstract idea" that particular symptoms are likely caused by particular diseases or conditions. The '105 patent describes a system in which a user enters data regarding a patient's symptoms and a computer generates a list of possible diseases or conditions that might be causing such symptoms. Any healthcare provider or patient who has ever consulted a medical treatise or home medical reference book to determine what disease or condition might be causing particular symptoms has practiced a non-computerized version of the claimed method. Because the '105 patent simply describes the abstract idea that certain symptoms are correlated with certain diseases and then applies that idea using conventional computer technology, it fails to meet section 101's subject matter eligibility requirements. *See MySpace, Inc. v. Graphon Corp.*, 672 F.3d 1250, 1267 (Fed. Cir. 2012) (Mayer, J., dissenting) ("While running a particular process on a computer undeniably improves efficiency and accuracy, cloaking an otherwise abstract idea in the guise of a computer-implemented claim is insufficient to bring it within section 101." (footnote omitted)); *see also Dealertrack, Inc. v. Huber*, 674 F.3d 1315, 1333 (Fed. Cir. 2012) (concluding that claims drawn to a "computer-aided" method of processing information through a clearinghouse fell outside the ambit of section 101); *CyberSource Corp. v. Retail Decisions, Inc.*, 654 F.3d

1366,1375 (Fed. Cir. 2011) (emphasizing "that the basic character of a process claim drawn to an abstract idea is not changed by claiming only its performance by computers, or by claiming the process embodied in program instructions on a computer readable medium"). Where, as here, a patent describes an abstract idea, but discloses no new technology or "'inventive concept,'" *Mayo*, 132 S. Ct. at 1294, for applying that idea, a robust application of section 101 at the summary judgment stage will save both courts and litigants years of needless litigation.

APPENDIX B

IN THE UNITED STATES DISTRICT COURT FOR THE NORTHERN DISTRICT OF TEXAS FORT WORTH DIVISION

HIGHMARK, INC.,

v.

ALLCARE HEALTH MANAGEMENT SYSTEMS, INC.,

CIVIL NO. 4:03-CV-1384-Y

OPINION AND ORDER GRANTING MOTION FOR EXCEPTIONAL-CASE FINDING AND ATTORNEY'S FEES[1]

Pending before the Court is the Motion for Exceptional Case Finding and Award of Attorney Fees and Expenses (doc. #513) filed by plaintiff, Highmark, Inc. ("Highmark"). After review, the Court concludes that this case is exceptional under 35 U.S.C. § 285 as a consequence of certain acts of defendant Allcare Health Management Systems, Inc. ("Allcare"), over the course of the litigation. The Court further concludes that sanctions under

---

[1] This order is being issued to correct a clerical error in the original order (doc. #564). The references to Alfredo Silva in the original order are replaced in this order with Mike McKool Jr.

Federal Rule of Civil Procedure 11 are appropriate. Highmark's motion will, therefore, be granted.

Also before the Court is Allcare's Motion for Hearing (doc. #552) in which Allcare requests that the Court conduct a hearing on the motion for exceptional-case finding. Because the Court has ruled on the motion for exceptional-case finding based on the briefing, the Court DENIES the motion for hearing as MOOT.

I. BACKGROUND

Allcare is a Virginia corporation with its principal place of business in Fort Worth, Texas. Allcare's business is the licensing of intellectual-property assets. Among the assets handled by Allcare is U.S. Patent No. 5,301,105 ("the '105 patent"). After conducting a survey of various healthcare management and insurance companies, Allcare filed suit against twenty-four such companies in four separate suits asserting that the companies' computerized information-management systems infringed the '105 patent.

Highmark was among the companies surveyed by Allcare. In April 2002, Allcare's vice president of licensing, Robert Shelton, wrote a letter to Highmark stating that Allcare believed Highmark's system infringed the '105 patent, requesting that Highmark consider purchasing a license to the '105 patent, and raising the potential for litigation if Highmark refused. Allcare sent additional letters to Highmark, encouraging Highmark to purchase a license, threatening litigation, and warning Highmark of the "substantial damages" Allcare would pursue, as well as the high costs of litigation. (Mot. App. at 354 (December 11, 2002, letter from counsel for Allcare,

Steven Hill, noting that over $2 million in fees had been expended in approximately 6 months by an entity defending against a related infringement suit by Allcare and that Allcare would be seeking "substantial damages" against Highmark).)

Among the suits instituted by Allcare based on alleged infringement of the '105 patent is *Allcare Health Management Systems, Inc. v. Trigon Healthcare, Inc.*, 1:02-CV-756-A (E.D. Va. Feb. 3, 2003). Trigon Healthcare, Inc., was also surveyed by Allcare. Based apparently on Trigon's responses, Allcare determined that Trigon's system infringed the '105 patent. After sending Trigon a letter and suggesting it license the '105 patent from Allcare, Allcare filed an infringement suit against Trigon in May 2002. (Resp. App. at 138.) According to Allcare, Trigon and Highmark's defenses to Allcare's allegations of infringement of claim 52 were the same in that both Trigon and Highmark challenged the validity of the '105 patent in light of undisclosed prior art and each claimed that their respective systems lacked a "diagnostic smart system" as required by claim 52. A diagnostic smart system, as contemplated by the '105 patent, is a system in which a physician enters codes symbolizing patient symptoms that are then compared by the computer system to stored data on the usual symptoms of common diseases and ailments. (Cl. Constr. Rep., doc. #367, at 2-3.) After this comparison, the system generates a list of conditions that are likely the cause of the specific patient's symptoms, along with recommended treatments. (*Id.*) Allcare filed a motion for summary judgment and, on February 3, 2003, the United States District Court for the Eastern District of Virginia entered its order. (Resp.

App. at 41-66.) The court concluded that claim element 52(c) did not require a diagnostic smart system and that the entry of data symbolic of patient symptoms did not have to be for the purpose of suggesting a mode of treatment. (Resp. App. at 45, 51-52). The court also concluded that the '105 patent is enforceable. (*Id.* at 57-62, 66.)

After the summary-judgment rulings in *Trigon*, Allcare sent another letter to Highmark. The letter apprised Highmark of the rulings favorable to Allcare in *Trigon*, again requested that Highmark purchase a license and suggested that litigation may be necessary if Highmark refused. After some discussion between Highmark and Allcare, Highmark filed this action against Allcare seeking a declaratory judgment of invalidity, noninfringement, and unenforceability of the '105 patent. Allcare filed a counterclaim alleging infringement of the '105 patent.

In August 2006, Don W. Martens was appointed special master in this case, and the issue of claim construction was referred to him. Martens submitted a report and recommendation (doc. #367) that the Court adopted in March 2007 (doc. #375). Martens's report construed the claims at issue in this case—claim 1, 52, 53, and 102.[2] After Martens's report, in February 2008, Allcare withdrew its counterclaim of infringement as to claim 102 (doc. #481). Highmark also withdrew its contention of invalidity and unenforceability of claim 1 (doc. #505). Martens also issued a report on Highmark's motion for summary judgment (doc. #484). The Court

---

[2] It should be noted that claim 53 is dependent upon claim 52. (Doc. #367 at 41.)

adopted Martens's report and entered summary judgment in favor of Highmark on August 28, 2008 (doc. #503), concluding that the '105 patent is not unenforceable but that Highmark's system did not infringe claim 52 or 53. As the prevailing party in this patent case, Highmark now seeks attorneys' fees and other expenses.

II. DISCUSSION

A. Legal Standards

1. 35 U.S.C. § 285

"The court in exceptional cases may award reasonable attorney fees to the prevailing party." 35 U.S.C. § 285. The evaluation of whether attorneys' fees should be awarded under § 285 is a two-step process. *See Digeo, Inc. v. Audible, Inc.*, 505 F.3d 1362, 1366-67 (Fed. Cir. 2007). First, a court must determine whether there is clear and convincing evidence that the case is exceptional. *See id.* at 1367. "The 'clear and convincing' standard is an intermediate standard which lies somewhere in between the 'beyond a reasonable doubt' and the 'preponderance of the evidence' standards of proof." *Pfizer, Inc. v. Apotex, Inc.*, 480 F.3d 1348, 1360 n.5 (Fed. Cir. 2007) (citing *Addington v. Texas*, 441 U.S. 418, 425 (1979) and *SSIH Equip. S.A. v. United States Int'l Trade Comm'n*, 718 F.2d 365, 380-81 (Fed. Cir. 1983) (Nies, J., additional views)). "Although an exact definition is elusive, 'clear and convincing evidence' has been described as evidence that 'place[s] in the ultimate factfinder an abiding conviction that the truth of its factual contentions are highly probable.'" *Id.* (quoting *Colorado v. New Mexico*, 467 U.S. 310, 316, (1984)). It is such evidence as to form in the mind of the trier of fact a

"firm belief or conviction" as to the truth of the allegations sought to be established. *See Trans-World Mfg. Corp v. Al Nyman & Sons, Inc.*, 750 F.2d 1552, 1559-60 (Fed. Cir. 1984) (discussing use of clear-and-convincing standard in proving prior use of a patented invention in overcoming presumption of patent's validity).

"A case may be deemed exceptional when there has been some material inappropriate conduct related to the matter in litigation, such as willful infringement, fraud or inequitable conduct in procuring the patent, misconduct during litigation, vexatious or unjustified litigation, conduct that violates Fed. R. Civ. P. 11, or like infractions." *Brooks Furniture Mfg., Inc., v. Dutailier Int'l, Inc.*, 393 F.3d 1378, 1381 (Fed. Cir. 2005). A court may find a case exceptional because the case is frivolous. *See Stephens v. Tech Int'l, Inc.*, 393 F.3d 1269, 1273-74 (Fed. Cir. 2004) (noting that a case may be deemed exceptional due to, inter alia, the frivolity of the suit); *see also Beckman Instruments, Inc. v. LKB Produkter AB*, 892 F.2d 1547, 1551 (Fed. Cir. 1989) (stating that "unjustified litigation" or a "frivolous suit" can form the basis of an exceptional-case finding). "A frivolous infringement suit is one [that] the patentee knew or, on reasonable investigation, should have known was baseless." *Stephens*, 393 F.3d 1273-74.

An award of attorneys' fees is not made mandatory by an exceptional-case finding. As the second step of the analysis under section 285, once a case is shown by clear and convincing evidence to be exceptional, a court must assess whether, in its discretion, an award of fees is justified. *See Digeo, Inc.*, 505 F.3d at 1366-67. A court may exercise its discretion and

decline to award attorneys' fees despite such an exceptional-case finding. In assessing whether an exceptional-case finding justifies an award of fees, a court must weigh factors—such as the relative merits of the parties' positions, the tactics of counsel, and the conduct of the parties—that contribute to a fair allocation of the burdens of litigation. *See S.C. Johnson & Son, Inc. v. Carter-Wallace, Inc.*, 781 F.2d 198, 201 (Fed. Cir. 1986).

2. Federal Rule of Civil Procedure 11

A court may also award fees and expenses as a sanction under Rule 11. *See* FED. R. CIV. P. 11; *see also Cooter & Gell v. Hartmarx Corp.*, 496 U.S. 384, 393 (1990) (explaining that the sanctions under Rule 11 "may, but need not, include payment of the other parties' expenses"). Among the bases upon which a court may award Rule 11 sanctions is the failure by a party seeking relief to properly investigate its allegations before filing suit. *See S. Bravo Sys. v. Containment Techs. Corp.*, 96 F.3d 1372, 1375 (Fed. Cir. 1996). In this case, at issue are Allcare's counterclaims of infringement. The United States Court of Appeals for the Federal Circuit has explained:

> Before filing counterclaims of patent infringement, Rule 11, we think, must be interpreted to require the law firm to, at a bare minimum, apply the claims of each and every patent that is being brought into the lawsuit to an accused device and conclude that there is a reasonable basis for a finding of infringement of at least one claim of each patent so asserted. The presence of an infringement analysis plays the key role in

> determining the reasonableness of the pre-filing inquiry made in a patent infringement case under Rule 11.

View Eng'g, Inc. v. Robotic Vision Sys., 208 F.3d 981, 986 (Fed. Cir. 2000).

3. Inherent Powers

A court may also award fees to a successful party under its inherent equitable power. *See Hall v. Cole*, 412 U.S. 1, 15 (1973). Before a court may exercise its inherent authority to impose sanctions, there must be "a finding of fraud or bad faith whereby the very temple of justice has been defiled." *See Amsted Indus. v. Buckeye Steel Castings Co.*, 23 F.3d 374, 378 (Fed. Cir. 1994). A court's inherent authority is in addition to authority provided by statute or rule. *See id.*

B. Analysis

1. Pre-Filing Investigation

Highmark insists that Allcare failed to obtain an opinion of a lawyer before filing counterclaims of infringement. Highmark also argues that Allcare failed to evaluate whether all of the elements of the patent claims at issue were contained in Highmark's system. In this regard, Highmark argues that although Allcare commissioned a survey by Seaport Surveys, Inc. ("the Seaport Survey"), to assess the systems of various health-industry companies, including Highmark, Allcare failed to tailor that survey to determine whether the systems of the companies surveyed contained all of the elements of patent claims 52, 53, and 102. Additionally, Highmark maintains that the fact that its system lacks claim element 52(c), which requires the entry

into a system of "data symbolic of patient symptoms for tentatively identifying a proposed mode of treatment," was the key to its defense against Allcare's allegation of infringement regarding claim 52. Despite this, Allcare never addressed how Highmark's system allegedly encompassed element 52(c), even after Highmark filed a motion for summary judgment on this precise point.

a. Need for Opinion by Patent Attorney

Allcare contends that a formal opinion by a patent lawyer is unnecessary for an adequate pre-filing investigation. Citing *Deering Precision Instruments, L.L.C. v. Vector Distribution Systems*, 347 F.3d 1314 (Fed. Cir. 2003), Allcare notes that the Federal Circuit has "rejected arguments that an action was frivolously filed even when the patentee did not obtain a formal opinion of counsel before asserting infringement." (Resp. Br. at 13.) Rather, all that is required is a "good faith, informed comparison of the claims of a patent against the accused subject matter." *See Q-Pharma, Inc. v. Andrew Jergens Co.*, 360 F.3d 1295, 1302-04 (Fed. Cir. 2004) (denying Rule 11 sanctions where patentee had made good-faith comparison and concluding the case was not exceptional for same reason). And Allcare insists it performed such a good-faith comparison.

But the issue in *Deering* appears to have been whether attorneys' fees were justified in light of the patentee's failure to consult a *patent* attorney regarding the patent's prosecution history and infringement under the doctrine of equivalents. *See Deering*, 347 F.3d at 1321. And regardless, the Federal Circuit in *Deering* merely decided that the

district court had not committed clear error by refusing to conclude that the failure to obtain an opinion of patent counsel is *per se* gross negligence and by otherwise concluding that the patentee's conduct was not harassing. *See id.* at 1321, 1327. Moreover, Highmark does not limit its complaint to Allcare's alleged failure to secure the opinion of a patent attorney. Rather, Highmark complains that the only investigation apparent from the record was performed by a layman.

b. Pre-Filing Investigation by Counsel[3]

Allcare insists that its counsel, Stephen Hill, provided an element-by-element explanation for its allegation of infringement of claim 52. (Resp. App. at 139.) That explanation is allegedly contained in certain charts that were initially prepared for the *Trigon* litigation. Because of the similarity of the issues in this case and those in *Trigon*, and because counsel for Highmark requested as much, Hill provided Highmark with the charts developed in connection with *Trigon*. (*Id.* at 4, 139-40.) Hill also purports to have spoken with experts to confirm his determination of infringement. (Resp. App. at 162-63.)

---

[3] The adequacy of counsel's pre-filing investigation is relevant to both fees under § 285 and sanctions under Rule 11. *See* FED. R. CIV. P. 11 (requiring all pleadings to be signed by an attorney whose signature represents that "the claims, defenses, and other legal theories are warranted" after a reasonable inquiry); *Brooks Furniture Mfg., Inc., v. Dutailier Int'l, Inc.*, 393 F.3d 1378, 1381 (Fed. Cir. 2005) (conduct that justifies exceptional-case finding includes "conduct that violates Fed. R. Civ. P. 11, or like infractions").

Highmark counters that the *Trigon* charts are insufficient to establish an adequate pre-filing investigation in this case. The charts, according to Highmark, deal with claim construction, not infringement. Hill seems to recognize as much in his declaration. (Resp. App. at 163 (describing the charts from *Trigon* as claim-construction charts).) As the United States Supreme Court explained in *Markman v. Westview Instruments*:

> [A] patent includes one or more 'claims,' which particularly poin[t] out and distinctly clai[m] the subject matter which the applicant regards as his invention. A claim covers and secures a process, a machine, a manufacture, a composition of matter, or a design, but never the function or result of either, nor the scientific explanation of their operation. The claim define[s] the scope of a patent grant, and functions to forbid not only exact copies of an invention, but products that go to the heart of an invention but avoids [sic] the literal language of the claim by making a noncritical change . . . .

Markman v. Westview Instruments, 517 U.S. 370, 373-74 (1996) (alterations in original) (citations and quotations omitted). On the other hand, "patent lawsuits charge what is known as infringement, and rest on allegations that the defendant without authority ma[de], used or [sold the] patented invention, within the United States during the term of the patent therefor." *Id.* at 374 (alterations in original) (internal quotations and citations omitted). Thus, Highmark argues that the charts address the

definition and scope of the '105 patent but do not address whether its system infringes the patent.

A review of the charts submitted by Allcare establishes that the charts do not merely recount the language of the claims at issue and proffer a construction of such claims. Instead, the charts also purport to include the relevant features of Highmark's system. (Resp. App. at 5-21.) But Allcare's evidence indicates that the charts' descriptions of features of Highmark's system are based on Allcare's analysis of the *Trigon* system and the perceived similarity between the *Trigon* system and that of Highmark. In fact, Hill describes Allcare's pre-filing investigation of its claims against Highmark as involving "discussions with technical experts . . . who[] authored an expert report in *Trigon* addressing one or more aspects of patent infringement of *Trigon's* system." (Resp. App. at 163.)

In his declaration, Hill also states that "early in discovery, Allcare provided Highmark with a claim chart in this case which was of our pre-filing analysis of infringement *against Trigon.*" (Resp. App. at 140 (emphasis added).) Allcare's briefing and evidence indicate that the *Trigon* charts were "annotated to take into consideration the technical documents which Highmark withheld until after discovery began in this case." (Resp. Br. at 1 n.2; Resp. App. at 154.) Allcare does not explain how it could demonstrate an adequate pre-filing investigation of its claims against Highmark by producing charts from *Trigon* that obviously could not have been annotated with information Allcare had not yet received from Highmark through discovery. *Cf.*

Jundin v. United States, 110 F.3d 780, 784 (Fed. Cir. 1997) (noting Court of Federal Claims Rule 11, patterned after Fed. R. Civ. P. 11, is not satisfied by "after-the-fact" investigation). Indeed, the charts that are contained in Allcare's appendix are dated November 8, 2004, eleven months after Allcare filed its counterclaims.

Highmark also points out that while Hill claims to have conferred with experts regarding his pre-filing infringement analysis, experts were not consulted regarding Highmark's system until after Allcare's counterclaims were filed. Hill states that he relied upon the charts from *Trigon* as to claim 52 but based his assessment of the alleged infringement of other claims "on discussions with appropriate technical consultants such as Dr. Holland." (Resp. App. at 163.) But invoices submitted by Dr. Holland to counsel for Allcare indicate that his earliest involvement in this case was in September 2004, well after Allcare had filed its answer and counterclaims. (Reply App. at 1-3.) Other invoices indicate that Allcare's remaining experts were not involved in this case prior to Allcare's filing of its counterclaims. (*Id.* at 4-10.)

Hill, along with an Allcare expert, also purportedly supervised Robert Shelton, Allcare's vice president of licensing, in his investigative efforts, which are discussed in detail below. But the expert assistance Shelton received dealt with his preparation of charts addressing the validity of the '105 patent in light of prior art, not whether Highmark's system infringed the '105 patent. (Mot. App. at 91-99.)

Hill broadly states that he was "involved in an investigation . . . [that] included a review of a survey

of Highmark." (Resp. App. at 137.) At no point, however, does Hill claim to have directly participated in the interpretation of the Seaport Survey results. To the contrary, in discussing Allcare's pre-filing investigation efforts, Hill cites Allcare's interrogatory responses which, in turn, recount Shelton's interpretation of Highmark's survey responses. (Resp. App. at 163 (citing Mot. App. at 176-79).) Indeed, these responses indicate that it was Shelton who formed the "opinion" and belief that Highmark's system infringed the '105 patent underlying Allcare's allegations. (Mot. App. at 165.) And Hill's discussion of his supervision of Shelton never addresses Shelton's interpretation of the Seaport Survey results or any role Hill might have played in such interpretation. (Resp. App. at 189-92.)

Allcare has produced a declaration by Hill, largely comprised of other broad statements and general assurances, to support its contention that it adequately investigated its allegations before filing counterclaims. But the only documentary evidence of Hill's investigation are the charts developed in *Trigon*, which Hill "annotated" with information that was not received until after Allcare's counterclaims were filed. (Resp. App. at 140, ¶12.) This is representative: Hill's statements regarding pre-filing investigation are without documentary support while his statements regarding post-filing investigative efforts are supported.

Hill's general assurances do not overcome the lack of any discussion or evidence of his specific efforts in investigating Highmark's system as opposed to the system in *Trigon*. Allcare protests that it has not provided Highmark or this Court with notes or

documents verifying Hill's pre-filing investigation because such things would reflect Hill's opinions and thought process and are, therefore, privileged. An attorney's opinions regarding a patent are privileged. *See Knorr-Bremse Systeme Fuer Nutzfahrzeuge GmbH v. Dana Corp.*, 383 F.3d 1337, 1344 (Fed. Cir. 2004) (en banc). But Allcare's decision to claim privilege in briefing this motion is questionable given its apparent failure to list documents related to Hill's analysis on its privilege log. *Cf. Rambus Inc. v. Infineon Techs. Ag.*, 318 F.3d 1081, 1106 (Fed. Cir. 2003) (affirming district-court ruling that failure to disclose documents on privilege log was litigation misconduct). And regardless of the existence of privilege at the time Highmark served discovery requests on Allcare, Allcare has asserted Hill's analysis as a defense to Highmark's motion for attorneys' fees. (Resp. Br. at 2.) Allcare has, therefore, waived the attorney-client privilege in regard to the issue of its pre-filing investigation. *See In re Echostar Commc'ns. Corp.*, 448 F.3d 1294, 1300 (Fed. Cir. 2006) (asserting the advice of counsel as a defense waives the attorney-client privilege for all communications on the subject matter and documents memorializing such communications).

Even assuming that Hill's opinions and mental impressions developed during his pre-filing investigation are privileged, Hill's declaration provides almost no detail regarding his efforts in conducting a pre-filing investigation. Hill simply asserts that he was "involved in an investigation into the technology of Highmark, Inc.," prior to filing counterclaims and engaged in an "element-by-element comparison of each claim . . . to the accused Highmark system." (Resp. App. at 137.) But the

specific investigation efforts that Hill discusses refer to the *Trigon* charts, which were annotated with information on Highmark's system after Allcare's counterclaims were filed, and Hill's post-filing consultation with experts.

The almost complete lack of detail in Hill's declaration regarding pre-filing investigation efforts, coupled with Allcare's failure to produce any documentary evidence of such efforts and its contradictory and suspect tactic of relying on counsel's advice as a defense to Highmark's motion while asserting that such advice is privileged leave the Court with the firm conviction that Hill performed either no pre-filing investigation at all, or one that was inadequate. *See Calloway v. Marvel Entm't Group, Div. of Cadence Indus. Corp.*, 854 F.2d 1452, 1471 (2d Cir. 1988) (lack of affidavit by attorney detailing pre-filing investigation suggests no investigation was made), *rev'd on other grounds Pavelic & LeFlore v. Marvel Entm't Group, Div. of Cadence Indus. Corp.*, 493 U.S. 120 (1989); *cf. Eltech Systems Corp. v. PPG Indus., Inc.*, 710 F. Supp. 622, 637-38 (W.D. La. 1988) *aff'd*, 903 F.2d 805 (Fed. Cir. 1990) (citing *Kori Corporation v. Wilco Marsh Buggies & Draglines, Inc.*, 761 F.2d 649, 656-57 (Fed. Cir. 1985); *Underwater Devices, Inc. v. Morrison-Knudsen Co.*, 717 F.2d 1380, 1390 (Fed. Cir. 1983)) (patentee's otherwise unreasonable pre-filing investigation not excused by reliance on undisclosed oral opinion of counsel because court could not "assess the reasonableness of the opinion"). When Hill's lack of or inadequate investigation is coupled with the portions of Allcare's interrogatory responses establishing that it was Shelton who formed the opinion and belief that Highmark's system infringed

the '105 patent, the Court is convinced that it is highly probable that the only pre-filing assessment of the Seaport Survey responses was performed by Shelton. This abdication of the responsibility for assessing the merit of a potential allegation of infringement falls short of what Rule 11 requires. *See* Fed. R. Civ. P. 11(b) (stating that by advocating a filing, an attorney certifies the propriety of the legal positions and truthfulness of the factual contentions contained in the filing); *Pavelic & LaFlore*, 493 U.S. at 125 (explaining that the "signing attorney cannot leave it to some trusted subordinate, or to one of his partners, to satisfy himself that the filed paper is factually and legally responsible; by signing he represents not merely the fact that it is so, but also the fact that he *personally has applied his own judgment*") (emphasis added).

c. Pre-Filing Investigation by Allcare

Allcare insists that Shelton's investigative efforts alone are enough to stave off attorneys' fees and sanctions. In doing so, it insists that Shelton was qualified for the work he performed—interpreting the Seaport Survey results, researching Highmark's system, and evaluating infringement—and was properly supervised.

Allcare's evidentiary support for Shelton's investigative efforts consists of its responses to Highmark's interrogatories. (Mot. App. at 162-66.) Those responses disclose that after Allcare received Highmark's answers to the Seaport Survey, Shelton undertook additional research on Highmark's system via public information available on the internet. (*Id.*) In fact, a demonstration version of Highmark's

system with an example-user interface was available on the internet and apparently discovered by Shelton during his research. (Mot. App. at 346-47 (letter by Hill to Highmark discussing the navimedix, vodium, and clarityvision websites).)

Shelton wrote a letter to Highmark's chief executive and financial officers and its general counsel in April 2002, suggesting that Highmark purchase a license of the '105 patent and hinting that failure to do so would result in a suit. (*Id.* at 164, 342-44). After Highmark denied that its system infringed the '105 patent, Shelton engaged in further research. (*Id.* at 165.) After his research, which apparently included the review of thousands of pages of documents, Shelton came "to believe" and "formed the opinion" that Highmark's system was a "smart system"—a system that, through the use of symptom codes, could indicate an insurance provider's approval or denial of authorization for a medical procedure—and, therefore, infringed the '105 patent. (Mot. App. at 162-66.)

Highmark complains that Shelton is not qualified to perform a pre-filing investigation because he is neither an engineer nor a patent lawyer. Allcare counters that, as Allcare's vice president of licensing, Shelton is experienced in patent matters. He is also the named inventor on two U.S. patents related to healthcare technology. The charts prepared by Shelton were reviewed for accuracy by Allcare's expert, Robert Gross. And Highmark did not point out any specific deficiency in the charts during its deposition of Gross or before the special master, and does not do so now. (Resp. App. at 189-91.)

But the charts prepared by Shelton and reviewed by Gross address the validity of the '105 patent in light of prior art, not whether the '105 patent was infringed by Highmark's system. (Mot. App. at 91-99.) These are separate issues. *See Lawman Armor Corp. v. Winner Int'l LLC*, 437 F.3d 1383, 1385 (Fed. Cir. 2006).

And Shelton's qualifications aside, the plain language of Rule 11 states that it is the attorney that represents to the court, by filing, signing, or advocating a pleading, that the contentions presented in that pleading are warranted after reasonable inquiry. *See* FED. R. CIV. P. 11(a), 11(b). However qualified Shelton may be or however extensive his investigative efforts, they do not fulfill the requirement of Rule 11. *See Q-Pharma, Inc.*, 360 F.3d at 1300 (noting that Rule 11 "requires an *attorney* to conduct a reasonable inquiry into the law and facts before filing a pleading") (emphasis added). Consequently, a violation of Rule 11 was committed regardless of Shelton's efforts. *See S. Bravo Sys. v. Containment Techs. Corp.*, 96 F.3d 1372, 1375 (Fed. Cir. 1996) (where evidence indicated that attorneys had merely relied on client's lay opinion that patent was infringed, Federal Circuit reversed and remanded district court's denial of Rule 11 sanctions stating that if such were the case, "it would be difficult to avoid the conclusion that sanctions are appropriate"); *also cf. Judin v. United States*, 110 F.3d 780, 784 (Fed. Cir. 1997) (attorney violates Court of Federal Claims Rule 11, patterned after the 1983 version of civil rule 11, by "giving blind deference to his client" regarding infringement analysis).

d. Reliance on *Trigon* Rulings

Highmark also complains that rather than perform an adequate pre-filing investigation of its system, Allcare pursued infringement claims against Highmark based on the summary-judgment rulings in *Trigon*. The rulings in *Trigon* are relevant to the issue of whether Highmark's system infringed the '105 patent only to the extent that Highmark's system and the system in *Trigon* are the same. There is no indication in the record that Allcare investigated Highmark's system or compared it to Trigon's system before filing counterclaims against Highmark. Yet Allcare points to the *Trigon* rulings as justification for its claims of infringement against Highmark.

In any event, the *Trigon* rulings dealt almost exclusively with the issues of claim construction, unenforceability, and invalidity of the '105 patent with regard to claim 52. The *Trigon* court's infringement analysis consists, in its entirety, of two sentences in which the court declares, without elaboration, that "summary judgment is inappropriate" because "there are genuinely disputed issues of material fact." (Resp. App. at 65.) The fact that Allcare obtained a favorable *construction* of claim 52 in *Trigon* did not satisfy its obligation to perform a pre-filing investigation regarding Highmark's alleged *infringement* of claim 52 before filing its counterclaim in this case. With regard to claim 102, Allcare does not discuss, nor does the Court's review of the *Trigon* summary-judgment ruling disclose, how the *Trigon* rulings on claim 52 bears on infringement of claim 102, if at all.

e. Availability of Information for Pre-Filing Investigation

According to Highmark, Allcare had tools with which to perform an adequate pre-filing investigation of Highmark's system—for starters, the Seaport Survey. (Mot. App. at 68-69; 463.) Allcare reports that the Seaport Survey was presented to healthcare companies as an attempt "to identify organizations that [were] the leaders in the electronic processing of authorization and referral requests." (Mot. App. at 521.) In reality, the survey was an effort by Allcare to identify companies using healthcare information-management systems similar to that embodied by the '105 patent to justify approaching such companies about purchasing a license of the '105 patent. (Mot. App. at 68-69; 342-44.) And, Highmark argues, despite Allcare's control over the Seaport Survey (Mot. App. at 68), Allcare failed to ask questions to determine whether the surveyed companies' systems contained all of the necessary elements of claims 52 and 102. Specifically, the Seaport Survey did not ask about the aspect of claim element 52(c) that was ultimately found to be missing from Highmark's system, i.e., whether Highmark's system permits the entry of symptoms or symptom data for the purpose of tentatively identifying a proposed mode of treatment. (Mot. App. at 521-37.) As for claim 102, the Seaport Survey failed to elicit whether Highmark's system possessed claim element 102(b), which requires a system to store symptom and treatment data for a predetermined plurality of health profiles and problems. (*Id.*) Nor did the survey inquire as to whether Highmark's system allowed for the sort of interconnection and interaction between system

users required by claim 102's preamble. Allcare's response does not address these alleged deficiencies.

Instead, Allcare asserts that it requested documents relating to Highmark's system but Highmark, on confidentiality grounds, refused to provide them. Allcare's argument seems to be that Highmark placed Allcare in an untenable position. First, Highmark sued for a declaratory judgment, thus initiating this litigation and compelling Allcare to file its counterclaims. Then, contrarily, says Allcare, Highmark now insists that Allcare should have performed a better pre-filing investigation despite Highmark's refusal to provide information on its system to Allcare. Allcare demands that these factors be weighed against finding this case exceptional.

The Federal Circuit has, under some circumstances, concluded that an alleged infringer's failure to provide information requested by a patentee justifies a conclusion that a case is not exceptional. For instance, Allcare cites *Hoffmann La Roche, Inc. v. Invamed, Inc.*, 213 F.3d 1359, 1364 (Fed. Cir. 2000). There, the patentee claimed that it had requested information on the alleged infringer's manufacturing process but was denied that information due to a confidentiality agreement. The patentee filed suit and stated in its complaint that it was unaware of any technique by which it could reverse engineer the alleged infringer's product and thereby determine the alleged infringer's process. Noting that the alleged infringer suggested no alternative method of gathering the necessary information, and that had the alleged infringer simply provided the information, as it eventually did, it could have avoided litigation,

the court of appeals affirmed the district court's denial of Rule 11 sanctions and § 285 attorneys' fees. *Hoffmann La Roche, Inc. v. Invamed Inc.*, 213 F.3d 1359, 1363-65 (Fed. Cir. 2000).

In this case, however, the alleged infringer has suggested an alternative method of gathering information. Highmark notes that it answered Allcare's survey questions. But the fact is Allcare did not ask about certain essential elements of claims 52 and 102.

Regardless of the survey results, by all accounts a large amount of information regarding Highmark's system was available publicly. Allcare even discovered a demonstration version of Highmark's system complete with a representative user interface. (Mot. App. at 346-47.) This interface displayed what code was used by Highmark's system (ICD9 as opposed to CPT) and what the code was used for (to indicate symptoms rather than to determine a proposed treatment). (*Id.* at 347.) These aspects of Highmark's system played a key role in its defense against Allcare's allegation of infringement of claim 52 and the summary judgment that was ultimately issued in this case. At the least, Allcare should have used available information to further assess Highmark's system before filing its counterclaims. But as discussed above, available information was never evaluated by an attorney.

f. Highmark's Initiation of this Suit

As noted, Allcare claims that shortcomings in its pre-filing investigation may be attributed to the fact that Highmark filed this declaratory-judgment action and, therefore, Allcare was forced to respond. At least one court has taken into consideration the

fact that the alleged infringer initiated litigation, thus pressing the patentee to take responsive action. *See Polarity, Inc. v. Diversified Techs., Inc.*, No. C-06-0646 EMC, 2006 U.S. Dist. LEXIS 89802, at *14-15 (N.D. Cal. Nov. 29, 2006). The court in *Polarity* did not find conclusive the mere fact that a preemptive declaratory judgment was filed, but instead considered what the declaratory-judgment suit disclosed about the circumstances of that case—the alleged infringer's refusal to respond to attempts to communicate or negotiate by the patentee.

In this case, Allcare sent a letter to Highmark suggesting that Highmark purchase a license to the '105 patent from Allcare to prevent the need for litigation. (Mot. App. at 342-44.) Highmark then engaged in communications with Allcare over the next year to assess the merits of Allcare's allegations and to dissuade Allcare from pursuing litigation. (*Id.* at 164, 750.) Only after it became clear that Allcare was bent on pursuing its allegations of infringement did Highmark file its declaratory-judgment action. (*Id.* at 750.) And cases such as *Polarity* notwithstanding, the Federal Circuit requires that prior to filing a complaint of infringement, including a counterclaim to the alleged infringer's declaratory-judgment action, the patentee "must be prepared to demonstrate to both the court and the alleged infringer exactly why it believed before filing the claim that it had a reasonable chance of proving infringement." *View Eng'g, Inc.*, 208 F.3d at 986.

Indeed, it would not be unfair to suggest that a patentee have a reasonable basis for believing a potential target has infringed before it makes its first demand that the target purchase a license to use the

invention or face the probability of an expensive infringement suit.[4] If Allcare had investigated Highmark's system sufficiently to have such a reasonable basis, Allcare would not have been in an untenable position when it was served with Highmark's suit.[5] Allcare had only to marshal for its

---

[4] The threat of a suit forces the alleged infringer to investigate the patentee's allegations and the existence of a valid patent, which is itself difficult and costly, and forces the alleged infringer to decide whether to deny infringement and be exposed to costly litigation or enter into licensing negotiations. *See* Gerard N. Magliocca, 82 Notre Dame L. Rev. 1809, 1814-17 (June 2007) (noting that "no simple research can ensure that a technology is not already patented" and that so-called patent trolls operate by obtaining patents that have been dormant and then aggressively and opportunistically enforcing them); *see also* John M. Golden, 85 Tex. L. Rev. 2111, 2125-30 (June 2007) (noting that the weaker the infringement case, the more likely the alleged infringer's decision to settle will be motivated by the high costs of litigation, which causes the settlement to fail to reflect the true economic contribution of the patent to the allegedly infringing product); Marc Morgan, Comment, *Stop Looking Under the Bridge for Imaginary Creatures: A Comment Examining Who Really Deserves The Title Patent Troll*, 17 Fed. Cir. B.J. 165, 174 (2008) (noting that, in addition to the high cost of patent litigation, which averages $2 million per suit, investigating a patent itself can be costly).

[5] Undermining Allcare's argument that it was pressed by Highmark's filing of a declaratory-judgment action into a premature filing of its counterclaims, is Allcare's decision to send Highmark letters requesting that Highmark license the '105 Patent, disclosing Allcare's efforts to litigate the patent against other companies, and threatening litigation for "substantial damages" if a license agreement were not reached. (Mot. App. at 342-61.) *See Wembley, Inc. v. Superba Cravats, Inc.*, 315 F.2d 87, 89 (2d. Cir. 1963) (stating that the availability of declaratory relief reduces the unfair advantage of patentees who threaten suit to obtain a license by allowing the alleged infringer to challenge the validity of the patent and

counsel all the knowledge it had that supported a reasonable and good-faith demand on Highmark, its target turned plaintiff. But if Allcare was caught flat-footed by Highmark's preemptive suit, it was not because Highmark acted hastily or unduly aggressively but because Allcare had not done its homework when it began trolling[6] for dollars and threatening litigation almost a year before Highmark filed its suit.

2. Allcare's Continued Pursuit of Frivolous Claims

Beyond the alleged deficiencies in the pre-filing investigation, Highmark also insists that Allcare

---

thereby prevent "an invalid patent from remaining in the art of a scarecrow"); *see also Arrowhead Indus. Water, Inc. v. Ecolochem, Inc.*, 846 F.2d 731, 734-735 (Fed. Cir. 1988) (observing that the declaratory-judgment act prevents alleged infringers from being forced into "an in terrorem choice between the incurrence of a growing potential liability for patent infringement and abandonment of their enterprises") *overruled on other grounds by MedImmune, Inc. v. Genentech, Inc.*, 549 U.S. 118 (2007).

[6] "Patent troll" is a pejorative term used to describe an entity that "enforces patent rights against accused infringers in an attempt to collect licensing fees, but does not manufacture products or supply services based upon the patents in question." *InternetAd Sys., LLC v. Opodo, Ltd.*, 481 F. Supp. 2d 596, 601 (N.D. Tex. 2007). In this case Allcare's actions align with the sort of conduct that gives the term "patent troll" its negative connotation. Allcare used a survey with a stated purpose of identifying leaders in the medical-information-processing industry as a ruse to identify potential targets for licensing demands, accused Highmark of infringing the '105 patent and, ultimately, filed counterclaims for infringement against Highmark having never performed an adequate investigation of such claims, and, along the way engaged in questionable and, at times, deceitful conduct.

should have realized its infringement allegations were meritless soon after the counterclaims were filed and should have withdrawn them. According to Highmark, Allcare was given a chance to inspect Highmark's system in April 2004. At this point, Highmark contends, Allcare should have realized Highmark's system did not contain element 52(c), as construed by this Court, or the required elements of claim 102. But Allcare, who now complains that any deficiencies in its pre-filing investigation are due in part to Highmark's refusal to provide confidential technical documents until suit was filed, did not even take an expert to inspect Highmark's system. (Mot. App. at 751.) This, notwithstanding Hill's statement in a July 2002 letter that if, after being presented with Allcare's claims and supporting evidence, Highmark continued to insist its system did not infringe the '105 patent, the only plausible way to bridge the gap would be for an Allcare representative, Hill, and "one or more industry experts . . . to make an hands-on inspection" of Highmark's system. (Mot. App. at 348.)

Allcare offers no explanation for its failure to inspect. It does explain that it maintained its allegations of infringement of claims 52 and 102 after the April 2004 inspection because it was spurred on by the *Trigon* summary-judgment rulings and the fact that, as an apparent result of the rulings, five healthcare companies licensed the '105 patent rather than contest validity. In this regard, Allcare's reliance on the *Trigon* rulings has some purchase. The Federal Circuit has approved of a district court's consideration of the fact that other alleged infringers, similarly situated, had settled cases with a patentee under § 285. *See J.P. Stevens Co. v. Lex Tex., Ltd.*,

822 F.2d 1047, 1049, 1051 (Fed. Cir. 1987). But the district court in *J.P. Stevens Co.* had considered the settlement of other cases in concluding that attorneys' fees were inappropriate *despite* an exceptional-case finding. *See id.* And, as already discussed, reliance on the *Trigon* ruling is only reasonable to the extent Allcare investigated Highmark's system and found it similar to that in *Trigon*—something that was never established in this case.

Highmark further argues that Allcare should have realized that its infringement counterclaims were frivolous because Allcare's own expert, Dr. Holland, conceded in his August 2007 deposition that Highmark's system did not infringe the '105 patent. As an example, the preamble to the 102 claim limits itself to a system including an "integrated interconnection and interaction of the patient, healthcare provider, bank or other financial institution, insurance company, utilization reviewer/case manager and employer." (Cl. Constr. Rep., doc. #367, at 20-21.) Holland admitted in his deposition that Highmark's system does not provide for the sort of interconnection and interaction required by claim 102. Thus, according to Highmark, Allcare should have known that its infringement allegations regarding the 102 claim were frivolous by this point.

The effect of a claim's preamble is a matter of claim construction. *Pitney Bowes, Inc. v. Hewlett-Packard Co.*, 182 F.3d 1298, 1305 (Fed. Cir. 1999). Hence, whether claim 102's preamble limited the scope of the claim might have been arguable at the outset of this litigation. But once this Court, on March 23,

2007, adopted the special master's report on claim construction, the scope of the claims at issue was clear. (Doc. #375.) Five months later, when its own expert recognized that Highmark's system did not possess all of the elements of claim 102, Allcare should have realized its allegation was meritless.

But Allcare maintained its allegations of infringement of claim 102 until February 6, 2008 (doc. #481), well after claim construction in this case clarified the elements of claim 102 in March 2007, and also well after Allcare's own expert's report indicated that claim 102 was not infringed by Highmark's system. Allcare explains that Holland highlighted nineteen paragraphs of his report that supported infringement of claim 102. (Resp. App. at 156.) But the report, and specifically these paragraphs, are not included in Allcare's appendix.[7]

Highmark complains that Allcare's continued pursuit of frivolous allegations increased the cost of the litigation. In support, Highmark states that because of Allcare's continued pursuit of its allegation of infringement of claim 102, it was necessary for Highmark to retain a rebuttal expert. Highmark had to include arguments regarding claim 102 in its motion for summary judgment, filed October 31, 2007, as well. (Doc. #400.)

Just as with claim 102, the elements of claim 52 were made clear by the special master's claim construction. And, also just as with claim 102, that construction made it apparent that Highmark's

---

[7] Regardless, the reference to these paragraphs in Allcare's appendix indicates that these paragraphs do not address the preamble limitation of claim 102, and thus would not rebut Highmark's argument on this point.

system did not infringe upon claim 52. Claim 52(c) was determined to cover a "diagnostic smart system" as disclosed by the '105 patent, i.e., a system in which "the physician enters the patient's symptoms and the computer system identifies the most likely medical conditions corresponding to the entered symptoms together with the generally approved treatment." (Infringement Rep., doc. #484, at 11.) Highmark's system uses the codes contemplated by the '105 patent—ICD9 codes—to identify symptoms but not proposed treatment. Proposed treatments are entered into the Highmark system by the physician, not generated by the Highmark system, and are indicated by a CPT code, not an ICD9. (*Id.* at 14-15.) Again Holland's report, served on Highmark on June 29, 2007 (doc. #406 at 3), demonstrates that Highmark's system lacked necessary aspects of this claim element. As the special master explained:

> Accepting, for purposes of this summary judgment motion, Dr. Holland's testimony that ICD9 codes are sometimes used as data symbolic of patient symptoms, in the accused system the physician enters data symbolic of patient symptoms (ICD9 code), *and* enters data tentatively identifying a proposed mode of treatment (CPT Code). The ICD9 code is not entered for identifying a proposed treatment as claimed. The ICD9 codes indicate the 'condition for which the patient is receiving treatment.' [Citing Holland's report] at ¶ 457. They do not *identify* the treatment.

(Infringement Rep., doc. #484, at 14, 15.) Indeed, as argued by Highmark, the summary judgment

entered in this case in Highmark's favor was predicated on the concessions and recognitions in Holland's report. (*See id.* at 14-15.)

In its supplemental briefing, Allcare argues that during the oral argument on the appeal of the merits, a comment by a member of the panel of the Federal Circuit recognized that the construction of claim 52 in the Court's order on the summary-judgment motions was different from that in the special master's report. Specifically, Judge Dyk commented that "what happened here was that you had an initial claim construction from the Special Master which was then elaborated, if you will, in connection with the summary judgment decision." (Supp. Br. App. at 3.)[8] But Allcare's argument places far too much emphasis on this comment.

During claim construction, Highmark argued that claim 52(c) was limited to the diagnostic smart system described in patent '105's specification. (Cl. Constr. Rep., doc. #367, at 40.) Allcare argued that claim 52(c) covered both the diagnostic smart system as well as a utilization review system embodied in the patent's specification. The special master declined to decide between these alternative arguments, noting that to limit claim 52(c) to the diagnostic-smart-system embodiment would be to impermissibly limit the claim by reference to a specification, while to decide whether claim 52(c)

---

[8] Citations to the appendix submitted by Highmark along with its supplemental briefing (doc. #541) are cited as "Supp. Br. App. at." Citations to the supplemental appendix submitted by Highmark in the initial briefing of its motion for exceptional-case finding (doc. #533) are cited as "Supp. App. at."

covered the utilization review system would amount to a premature infringement analysis. (*Id.* at 41-42.)

The special master did, however, construe claim 52(c) and specifically construed the claim element's use of the word "for" as meaning "used to indicate the aim, or purpose of an action or activity." (*Id.* at 40.) Thus, as of the special master's claim construction, it was apparent that the "aim" or "purpose" of entering "data symbolic of patient symptoms," as described by claim 52(c), is "identifying a proposed mode of treatment." That this construction should have alerted Allcare to the deficiency in its position is all the more apparent when considered in light of the fact that, as of the special master's report on claim construction, all parties agreed that claim 52(c) covered at least the diagnostic-smart-system embodiment, which requires that the system identify a proposed mode of treatment through the use of symptom codes entered by the physician. Although a specific embodiment is not to be used to limit a claim, it is meant to illustrate the meaning and coverage of a claim. *See Phillips v. AWH Corp.*, 415 F.3d 1303, 1315 (Fed. Cir. 2005) ("[C]laims must be read in view of the specification, of which they are a part. [The specification] is the single best guide to the meaning of a disputed term."). As the special master stated:

> The step of "entering . . . data symbolic of patient symptoms for tentatively identifying a proposed mode of treatment" is disclosed in the specification as performed by the central processing system determining the recommended treatment protocols from the entered observed symptoms. '105 Patent at 6:59-67. The claim is not limited to the

> specific embodiment disclosed, but the limitation must be construed in that context. In the context of the specification, "for" . . . require[s] that the proposed mode of treatment must be identified by using the entered symptoms to determine one or more appropriate treatments. That is not done in the accused system, in which the physician enters both the diagnosis or symptoms, and the proposed treatment.

The special master's conclusion that the specific purpose, under claim 52(c), of the entry of symptom codes was to identify a proposed mode of treatment taken in light of the diagnostic-smart-system embodiment makes it apparent that a system such as Highmark's, that does not assist the physician in identifying the illness or a proposed treatment, does not infringe claim 52.

Thus, Judge Dyk's comment aside, the meaning given to claim 52(c) by the special master was clear. Moreover, Allcare's argument that the meaning given to claim 52(c) in the order on the motions for summary judgment was changed from that recommended by the special master as a justification for its continued pursuit of a counterclaim for infringement of claim 52 is undermined by its own counsel's statements. During the very oral arguments in which Allcare argues that a changed claim construction was recognized, Hill stated that "[t]he claim construction never changed." (Supp. Br. App. at 3.)

Allcare states that even the special master recognized this case involved difficult issues. This is certainly true. But however difficult some issues in

this case may have been, it is no explanation for Allcare's continued pursuit of meritless allegations after the lack of merit became apparent. In fact, on the same page on which the special master recognized the difficulty of certain aspects of this case, the special master acknowledged that it was clear Hill and Allcare were taking a position inconsistent with Holland's report regarding the role of code entry for diagnosis and treatment regarding claim 52. (Resp. App. at 236.)

Even maintenance of frivolous claims is not exceptional according to Allcare. For instance, in *Union Pacific Resources Company v. Chesapeake Energy Corporation*, 236 F.3d 684 (Fed. Cir. 2001) which was an appeal from this Court, the Federal Circuit concluded that this Court did not commit clear error in refusing to find a case exceptional where it was alleged that a frivolous claim had not been withdrawn early enough. *See id.* at 694. The Federal Circuit explained that it is normal for claims and parties to be dropped during the course of litigation, that a narrowing of issues is "sound judicial policy," and that the party seeking fees had not shown that the conduct at issue was "exceptional or vexatious as compared to normal litigation." *See id.*

Conversely, in this case Highmark clearly has shown that Allcare's conduct was not part of normal litigation conduct. Indeed, Allcare's own explanations for maintaining its claims after Holland's report exposed them to be without support establish that Allcare's conduct was not part of normal litigation conduct. Specifically, Allcare attempts to excuse as strategic its delay in

withdrawing its allegation of infringement of claim 102. Allcare withdrew its allegation that claim 102 was infringed by Highmark's system after deposing Highmark's expert, Dr. Jeremy Nobel, and concluding that Highmark's contention that claims 52 and 53 were invalid was without merit. (Resp. App. at 158.) Thus, Allcare appears to acknowledge that it continued to pursue meritless allegations as insurance or leverage in relation to the opposing party's contentions. This demonstrates that this is not a case in which a party maintained meritless allegations for a brief period or without reflection. Nor is this merely a case in which the patentee took a position regarding infringement against which summary judgment was eventually entered or with which the Court disagreed. Instead, Allcare's allegations were shown to be without support by its own expert's report and deposition testimony. Yet Allcare persisted in its infringement allegations.

3. Continued Reliance on *Trigon*

More generally, Highmark complains that Allcare has continually referred to the summary-judgment ruling in *Trigon* and the licensing agreements that followed as support for Allcare's position in this case. Allcare has in fact used the similarity of the *Trigon* case in its negotiations with Highmark and throughout this litigation. Before the summary-judgment ruling in *Trigon* issued, Allcare suggested that Highmark set aside $3.75 million in escrow to be paid to Allcare as a license fee in the event Allcare succeeded on its summary-judgment motion. After the District Court for the Eastern District of Virginia ruled in Allcare's favor, Allcare wrote another letter to Highmark apprising Highmark of the ruling,

again requesting that Highmark license the '105 patent, and threatening litigation. (Resp. App. at 138.) Further, since its favorable summary-judgment ruling in *Trigon*, and particularly in briefing the issue of the adequacy of its pre-filing investigation in this case, Allcare has continued to rely on its efforts in *Trigon* and upon *Trigon*'s outcome.

"An infringement analysis . . . requires two steps: (1) construction of the claims to determine the scope and meaning of the asserted claims; and (2) comparison of the properly construed claims with the allegedly infringing device." *Deering Precision Instruments*, 347 F.3d at 1322. As already explained, the *Trigon* rulings did not address infringement in any detail but instead focused on the issues of claim construction, unenforceability, and invalidity. And Allcare's reliance on *Trigon* as a justification for maintaining infringement claims against Highmark is further undermined by the dubious nature of the *Trigon* rulings. In interpreting claim element 52(c), which defines claim 52 as entailing the entry of "data symbolic of patient symptoms for tentatively identifying a proposed mode of treatment," the Eastern District of Virginia concluded that the word "for" does not indicate a cause-and-effect relationship but, instead, merely indicates a correspondence between symptoms and the proposed treatment. That is, the method embodied by claim 52 is not limited to a system in which the doctor's entry of patient symptoms causes the system to identify a proposed mode of treatment. But one need only consult a dictionary to find that the word "for" indicates a correspondence only when used with regard to quantities, such as "two for one," or in

idiomatic expressions, such as "word for word." *See* 4 Oxford English Dictionary 26 (2d ed. 1989) (definitions A.VIII.24 & A.VIII.25 of "for"). And as discussed above, in context, the word "for" clearly indicates a cause-and-effect relationship, not a mere correspondence as determined by the Eastern District of Virginia. *See id.* at 24 (definition A.IV.8.a) (defining "for" as meaning "with the object or purpose of"). Indeed, as comments made by the panel of the Federal Circuit during oral argument of the appeal of the merits in this case indicate, the use of the word "for" discriminates "between [a system] where the computer, with its memory and analytic capability, picks the treatment versus the situation where the physician picks the treatment before the physician even begins to type anything on the form." (Supp. Br. App. at 6.)

Moreover, once a claim construction was issued in this case, the issue became whether Highmark's system infringed the '105 patent as so construed. The *Trigon* rulings became irrelevant. The maintenance of an infringement allegation that "the patentee knows, or on reasonable investigation should know, is baseless constitutes grounds for declaring a case exceptional under 35 U.S.C. § 285." *Eltech Sys. Corp. v. PPG Indus., Inc.*, 903 F.2d 805, 810-811 (Fed. Cir. 1990). Thus, even if an exceptional-case finding might not be justified based on Allcare's scant pre-filing investigation alone,[9] it is

---

[9] *See Stephens*, 393 F.3d at 1273-74 ("A frivolous infringement suit [under § 285] is one which the patentee knew or, on reasonable investigation, should have known was baseless."); *see also Ultra-Temp Corp. v. Advanced Vacuum Sys., Inc.*, 189 F.R.D. 17, 22 (D. Mass. 1999) ("[U]nlike Rule 11, a failure to conduct an adequate investigation, without more, is not

justified when considered in combination with Allcare's continued pursuit of allegations shown to be meritless and with its use of other tactics yet to be discussed here.

4. Assertion of Meritless Defenses

Highmark further contends that Allcare asserted meritless defenses. As already noted, on March 4, 2003, after the summary-judgment rulings in *Trigon*, Shelton, on behalf of Allcare, wrote a letter to Highmark discussing the rulings, proposing that Highmark purchase a license to the '105 patent, and suggesting that litigation might ensue if Highmark refused. (Resp. App. at 132-33.) Hill and another attorney representing Allcare, V. Bryan Medlock, were sent copies of the letter. (*Id.* at 133.) In the letter, Allcare acknowledges that the *Trigon* rulings have no binding effect on Highmark in this litigation. (*Id.* at 133.) Nevertheless, in its original answer, filed December 16, 2003 and signed by Medlock, Allcare asserted that Highmark had participated in defending against the infringement allegations in *Trigon* and was, therefore, bound under res judicata and collateral estoppel to the orders issued in *Trigon*. (Doc. #22, at 5.) Highmark filed a motion for judgment on the pleadings as to the res judicata and collateral estoppel defenses, (doc. #28), after which Allcare withdrew the defenses. Highmark argues that Allcare's answer increased the expense of this litigation and demonstrates Allcare's willingness to make meritless assertions. Allcare meekly defends

---

grounds for finding a case to be 'exceptional' under 35 U.S.C. § 285."); *compare Judin*, 110 F.3d at 784 (sanctions were appropriate under Court of Federal Claims Rule 11 due to lack of pre-filing investigation even where claims were "colorable").

those arguments by noting that it attempted to negotiate the issue without the need for motion practice and that neither the Court nor the special master gave thought to giving the *Trigon* rulings binding effect in this case. (Resp. App. at 167-68.)

But Highmark's point is that despite Allcare's knowledge that the defenses were without merit, it nevertheless asserted them and thereby unnecessarily increased the issues and costs in this litigation. Allcare's attempt to negotiate the withdrawal of its meritless defenses and the fact that the defenses did not prejudice Highmark's legal position do nothing to address this point. The evidence of these actions firmly convinces the Court of Allcare's use of frivolous and vexatious tactics and supports an exceptional-case finding and sanctions under Rule 11.

5. Allcare's Shifting Claim Construction

Allcare also allegedly engaged in various other acts of litigation misconduct. The Court concludes, however, that most of the remaining acts alleged by Highmark appear to be discovery disputes that are likely in a complex and hotly contested case. But Highmark also insists that Allcare's claim construction, particularly with regard to claim element 52(c), "shifted" throughout the litigation. Allcare explains that it was merely engaged in "word smithing" in an effort to bridge the differences in the parties' proposed constructions. The timing of Allcare's proposed constructions, however, refutes this explanation.

As noted by Highmark, Allcare timely filed its proposed claim construction under the Court's scheduling order. (Docs. #59.) After the scheduling-

order deadline and after Highmark filed its motion for summary judgment, Allcare changed its proposed construction in a motion for claim construction. (Doc. #158.) And after the special master had conducted a claim-construction or "*Markman*" hearing, Allcare again altered its proposed construction in a chart of "claim terms at issue and the constructions of said terms that are acceptable to Allcare," which was disclosed to Highmark on November 15, 2006. (Mot. App. at 411.) Highmark points to other changes to Allcare's proposed construction, such as by way of an updated proposed order to Allcare's motion for claim construction after Highmark opposed such motion, but these appear to be due to clerical error or otherwise explainable. (Doc. #269.)

Allcare responds that Highmark suffered no harm as a result of its changing proposed construction. Further, according to Allcare, any harm suffered by Highmark due to the delayed claim construction in this case was not a result of Allcare's changes to its proposed construction. On August 12, 2005, this Court ordered all claim-construction briefing stricken and new briefing due to the Federal Circuit's decision in *Phillips v. AWH Corp.*, 415 F.3d 1303 (Fed. Cir. 2005). (Doc. #282.) Even so, the Court rejects Allcare's explanation for its actions. Without reasonable explanation, Allcare presented Highmark with various constructions of the '105 patent's claims, thus complicating Highmark's ability to advance its own claim construction and to defend against Allcare's elusive allegations.

6. Allcare's Control of the Seaport Survey

One last allegation regarding Allcare's conduct during this litigation warrants discussion.

Highmark argues that Allcare misrepresented its role in the formulation and dissemination of the Seaport Survey to the United States District Court for the Western District of Pennsylvania in securing a transfer of venue to this Court. Allcare argued that the Seaport Survey was not a "contact" with the Western District of Pennsylvania for the purpose of personal jurisdiction because Allcare did not control the Seaport Survey.

In his declaration, Shelton clarifies the representations to the Western District of Pennsylvania at issue. Allcare argued that the Seaport Survey was not a contact with Pennsylvania for jurisdictional purposes because it "did not control the manner in which Seaport Surveys, an independent contractor, went about *completing* the surveys." (Resp. App. at 115 (emphasis added).) Further, Shelton insists "Allcare did not control how Seaport Surveys carried out its surveys, nor did it dictate what companies Seaport opted to call upon." (*Id.*)

As for the literal completion of the survey, it is true that no Allcare employee or personnel participated in the survey calls in any way, and Allcare was not aware of the survey results until days after the interviews were completed. But Allcare participated in and, indeed, controlled every other aspect of the survey. As for the design of the questionnaire, it appears that Allcare had total control. Shelton states in his declaration that after initial discussions with Seaport, he sent Seaport a draft questionnaire. (Resp. App. at 116.) After initial test surveys were performed, Shelton provided Seaport a revised questionnaire. (*Id.* at 117.) Shelton later provided

Seaport a supplemental questionnaire to be used in follow-up interviews. (*Id.*) Seaport's response to Highmark's subpoena confirms Allcare's control over the composition of the questionnaire, stating "[t]he survey questionnaire that we used for this research was provided by Allcare." (Mot. App. at 717.)

The record also indicates that Allcare effectively controlled what companies were to be interviewed. Shelton states in his deposition that he extensively participated in the preparation of the survey and identified some companies that were to be surveyed. (Mot. App. at 271.) Shelton provided a list of fifty companies from which Seaport was to complete twenty initial interviews. (Resp. App. at 116; Supp. App. at 22-24.) An email included in Highmark's supplemental appendix indicates that Shelton specifically identified eleven Virginia-based companies to be surveyed as well. (Supp. App. at 13-14.) As for the remainder of the Seaport Survey, which was to involve the survey of 50 to 100 companies per month for several months, Allcare directed Seaport to locate a list of other firms to interview. (*Id.* at 117.) "The telephone lists were sourced by Seaport Surveys from a provider . . . according to Allcare's specifications" says Seaport. (Mot. App. at 717.) Then based on the methodology proposed by Allcare, Seaport selected companies, as well as the specific person within a given company, to survey. (Resp. App. 116-18; (Mot. App. at 273 (Shelton stating Allcare instructed Seaport Surveys on "how to go about identifying firms—identifying individuals to interview for completing the survey"); Supp. App. at 21.) Thus, Allcare not only provided a list of specific companies for Seaport to survey, Allcare specified the sort of companies it desired to

have surveyed so that Seaport could obtain a list, and provided a methodology for selecting companies and individuals to be interviewed. In fact, when Seaport had difficulty getting through to a person to be interviewed at some of the companies surveyed, Allcare offered to research and resolve the issue itself. (Supp. App. at 20.)

The Western District of Pennsylvania does not appear to have placed much weight on Allcare's representation regarding the degree of control over the Seaport Survey. Even so, Allcare's representation to the Western District of Pennsylvania that it "did not control how Seaport Surveys carried out [the] surveys" is at best obfuscatory and it strains the bounds of zealous advocacy. The evidence leaves this Court with the firm conviction that counsel for Allcare, including Hill, who presented the motion to dismiss to the Western District of Pennsylvania did not live up to the spirit, and probably not the letter, of Rule 11 in making the argument.

7. Conclusion Regarding Rule 11 and § 285

a. Rule 11

Having reviewed the arguments and evidence presented by both sides, and having reviewed the record of this case as a whole, the Court finds that no pre-filing investigation of Allcare's counterclaims was performed by an attorney, let alone a patent attorney. This alone warrants sanctions under Rule 11. *See Pavelic & LaFlore*, 493 U.S. at 125 (signing attorney may not merely trust subordinate or other attorneys "that the filed paper is factually and legally responsible"); *S. Bravo Sys.*, 96 F.3d at

1375 (attorney may not rely on client's lay opinion); *cf. Judin*, 110 F.3d at 784 (sanctions were appropriate under Court of Federal Claims Rule 11 due to lack of pre-filing investigation even where claims were "colorable"). Responsibility for this failure falls predominantly on Hill's shoulders. The record establishes that Hill has been involved in this case since its earliest stages. (See Doc. #4 (motion to dismiss filed with the Western District of Pennsylvania, in which Hill joins).) Despite the designation on the docket of Joseph Cleveland as lead counsel, the evidence in the record shows that Hill has been regarded as Allcare's chief counsel. (See doc. #285 (letter from Cynthia Kernick, counsel for Highmark).) Indeed, Allcare's response to the motion for exceptional-case finding relies heavily on Hill's declaration and description of the events in this case and, with regard to pre-filing investigation, Allcare relies almost exclusively on Hill's investigative efforts in defending against Highmark's motion.

And as the foregoing analysis establishes, those efforts were sorely deficient. Rather than perform a true pre-filing investigation as to the merits of Allcare's claims of infringement against Highmark, Hill relied on the analysis performed by Shelton, the pre-filing investigation from *Trigon*, and the summary-judgment rulings from *Trigon*. Shelton is a layman, and Rule 11 does not allow an attorney to wholly defer to his client's analysis, particularly in the context of patent litigation, which often involves substantial costs. In any event, Shelton's analysis, as well as the charts and summary-judgment rulings from *Trigon* dealt with claim construction, not infringement. For the *Trigon* investigation and

rulings to have any bearing on whether Highmark's system infringed the '105 patent, it would have to be shown that Highmark's system was the same, in relevant aspects, as the system in *Trigon*. This was never shown. Hill provides broad assurances that he performed a proper pre-filing investigation, and he and Allcare rely on his opinions as proof of such investigation. Yet, contrarily, Hill and Allcare assert that the opinions are privileged. In any event, there is no documentary evidence to support Hill's assertions.

Hill was also aware that Highmark could not be held to the rulings in *Trigon* based on res judicata or collateral estoppel. Nevertheless, Allcare asserted these defenses in its original answer. And Hill joined in the motion to dismiss filed with the Western District of Pennsylvania in which Allcare represented that it did not control the Seaport Survey, despite the fact that Allcare clearly controlled all relevant aspects of it.

Hill is not the only attorney whose conduct falls short of what Rule 11 requires. V. Bryan Medlock of Sidley Austin, LLP, signed Allcare's original answer and counterclaim. This pleading included not only Allcare's counterclaims of infringement, for which there had been no pre-filing investigation, but also included the resjudicata and collateral-estoppel defenses based on the *Trigon* rulings, which Allcare had previously acknowledged were not viable against Highmark.

Joseph Cleveland, of Brackett & Ellis, PC, appeared in this case on behalf of Allcare in January 2004, and was designated in April 2004 as Allcare's lead attorney. In October 2004, the parties filed

their proposed joint claim construction. Thereafter, Allcare engaged in needless alterations of its claim construction. And in responding to the motion for exceptional-case finding, Cleveland and Hill argue that the claim construction changed from the special master's report to the summary-judgment ruling. They argue that Judge Dyk recognized as much during oral argument of the appeal on the merits, and that this explains their continued pursuit of the infringement claims. But a review of the record shows that the claim construction did not change. Hill acknowledged this during oral argument before the court of appeals.

Finally, Hill; Cleveland; and Mike McKool Jr., Christopher Harrington, Luke McLeroy, and R. Darryl Burke, of the firm McKool Smith, continued to pursue the infringement claims against Highmark, well after those claims had been shown to be without merit. Allcare's response brief points to the rulings in *Trigon* and agreements by other healthcare-management companies to license the '105 patent as justification for the continued pursuit of claims against Highmark. But the claim-construction rulings in *Trigon* became irrelevant to this case once this Court adopted the special master's report on claim construction in March 2007. Of course, Allcare might have argued that it continued with its infringement claims in order to appeal the claim construction. But Allcare has not argued this, and it is noteworthy that Allcare's arguments regarding claim construction were rejected by the Federal Circuit on the appeal of the merits. To the contrary, Allcare acknowledges that it continued to pursue its infringement allegation as to claim 102 based not on its merit, but as leverage against Highmark's claims.

Regardless, when Allcare's expert acknowledged, by way of his June 2007 report and August 2007 deposition, that Highmark's system lacked essential elements of both claims 52 and 102, Allcare should have withdrawn its claims. Instead, Allcare persisted, needlessly prolonging this litigation and increasing its costs.

In light of these actions, the Court concludes that sanctions are appropriate against Hill and his firm, Hill, Kertscher & Wharton, LLP; Bracket & Ellis; V. Bryan Medlock and his firm Sidley Austin, LLP; and McKool Smith. *See* Fed. R. Civ. P. 11(d) (stating that, absent exceptional circumstances, an attorney's firm must be held jointly responsible for his Rule 11 violation).

b. Section 285

This same pattern of conduct, by clear and convincing evidence, exhaustively identified and examined here, justifies an exceptional-case finding. The evidence establishes with a high probability that Allcare was not some naive or passive participant in this litigation. Rather, it pursued this suit as part of a bigger plan to identify companies potentially infringing the '105 patent under the guise of an informational survey, and then to force those companies to purchase a license of the '105 patent under threat of litigation.

Allcare's vexatious and, at times, deceitful conduct did not stop there. Allcare maintained infringement claims well after such claims had been shown by its own experts to be without merit and did so as a tactic to provide leverage against Highmark's pending claims. It also asserted defenses it and its attorneys knew to be frivolous. Indeed, just to have its case

transferred to this Court, Allcare and its attorneys misrepresented their involvement in the Seaport Survey to the Western District of Pennsylvania.

And Allcare's explanations for its conduct fail under scrutiny. Allcare complains that its inadequate pre-filing investigation was due to the fact that Highmark preemptively filed this declaratory-judgment action. But it was Allcare that began threatening suit almost a year before this action was filed. Allcare complains that Highmark refused to provide discovery-type materials so that the claims of infringement could be properly evaluated. But Allcare concedes that a great deal of information on Highmark's system was publicly available. For instance, in a July 2002 letter to counsel for Highmark, Hill explains that he used an example of Highmark's system available on the internet and a "number of . . . publicly available articles and white papers" in concluding that Highmark's system had aspects that implicated the '105 patent. (Mot. App. at 346.) Hill and Allcare failed, however, to provide any evidence, other than Hill's broad assurances, that this information was ever used in an infringement analysis before the first letter was written to Highmark raising the potential for litigation or before Allcare's counterclaims were filed. Hill and Allcare's attempt to rely on Hill's opinions as justifying the infringement claims and the lack of documentary evidence of an infringement analysis is all the more suspect in light of their attempt to assert that Hill's opinions are privileged.

Further, Allcare's argument that Highmark withheld the evidence necessary for Allcare to properly evaluate its infringement claims is

undermined by Allcare's own failure to take advantage of the information that Highmark did make available. In the July 2002 letter, Hill states that if Highmark persisted in denying that its system infringed the '105 Patent the only way to proceed would be to have an Allcare representative, Hill, and "one or more industry experts . . . to make a hands-on inspection of" Highmark's system. (Mot. App. at 348.) Highmark made its system available for inspection in April 2004, but Allcare did not send an expert to inspect it.

Hill's July 2002 letter also refers to the Seaport Survey as supporting Allcare's claim. But Allcare, which controlled all material aspects of the survey, failed to ensure that questions were asked about key aspects of the systems used by those questioned, undermining the usefulness of the survey as a tool to properly investigate its infringement allegations and exposing the survey as a ploy to identify targets from which a licensing agreement could be demanded. The evidence presented firmly convinces the Court of these facts, and, in light of them, the Court concludes that this is an exceptional case.

8. Discretion to Withhold Award

Allcare calls upon the Court, in the event of an exceptional-case finding, to exercise its discretion and deny an award of fees. In assessing whether an exceptional-case finding justifies an award of fees, a court must weigh factors such as the closeness of the case, the tactics of counsel, and the conduct of the parties that contribute to a fair allocation of the burdens of litigation. *See S.C. Johnson & Son, Inc. v. Carter-Wallace, Inc.*, 781 F.2d 198, 201 (Fed. Cir. 1986). Allcare performed a poor pre-filing

investigation of its allegations, with no apparent investigation by counsel. Thereafter, Allcare maintained its allegations after they were shown to be meritless, advanced meritless defenses, and needlessly complicated claim construction. Allcare also likely misled the district court of the Western District of Pennsylvania. And while Allcare, as a patent holder, is entitled to enforce the '105 patent, Highmark is entitled to be free from the huge burdens of patent litigation to the extent possible. *Cf. Judin*, 110 F.3d at 785 (before imposing the burdens of patent litigation on an alleged infringer the patentee must ensure there is a "well-grounded basis" for the suit). Fees will be awarded and sanctions imposed in this case.

9. Inherent Authority

The Court has concluded that this is an exceptional case under § 285 and that sanctions are appropriate under Rule 11. There is no need for the Court to exercise is inherent authority to award fees and expenses.

III. CONCLUSION

The Court has concluded that the facts of this case support imposing sanctions against Steven Hill and his firm, Hill, Kertscher, & Wharton, LLP; V. Bryan Medlock and his firm, Sidley Austin, LLP; Joseph F. Cleveland and his firm, Bracket & Ellis; and Mike McKool Jr., Christopher Harrington, Luke McLeroy, and R. Darryl Burke and their firm, McKool Smith, and that there is insufficient cause to exercise its discretion to deny Highmark's request for sanctions. And in light of the conduct discussed above, the Court imposes the sanction of monetary penalties to be paid into the registry of the Court: $25,000

against Steven Hill and Hill, Kertscher, & Wharton, LLP; $5,000 against Mike McKool Jr., Christopher Harrington, Luke McLeroy, and R. Darryl Burke and McKool Smith; $2,500 against V. Bryan Medlock and Sidley Austin, LLP; and $2,500 against Joseph F. Cleveland and Bracket & Ellis. These sanctions are imposed under guidance provided by subparagraph (4) of paragraph (c) of Rule 11, which limits sanctions "to what suffices to deter repetition of the conduct or comparable conduct by others similarly situated." The Court expressly refuses to order the sanctioned attorneys to pay any of Highmark's attorneys' fees, believing the penalties imposed suffice, and believing that equity suggests that Allcare, the beneficiary of its attorneys' efforts in this and other brought and threatened cases, should be the entity bearing the primary burden of its over-zealous pursuit of Highmark. These penalties are to be paid into the Court, by way of the clerk of Court, no later than April 30, 2010. *See* Fed. R. Civ. P. 11(c)(4) (listing payment of penalty into court as permissible sanction).

As for an exceptional-case finding under section 285, the Court has concluded this is an exceptional case and that there is no cause to exercise its discretion to deny Highmark's request for fees. Having so concluded, the issue of the reasonableness of the fees requested by Highmark remains. Highmark's current motion addresses the reasonableness of the fees based solely on estimates and acknowledges that additional briefing and evidence in support of fees is necessary. It is, therefore, ORDERED, pursuant to Fed. R. Civ. P. 54(d)(2), that Highmark submit a brief on the reasonableness of the attorney and expert fees it

requests no later than thirty days from the date of this order. Highmark must take care in its briefing to request only those attorney and expert fees that it incurred as a result of the conduct of Allcare and its attorneys as discussed in this opinion and order. *See Takeda Chem. Indus. v. Mylan Labs.*, 549 F.3d 1381, 1390 (Fed. Cir. 2008) (noting that fees for an entire suit are rarely awarded). As part of this briefing, Highmark may file under seal invoices reflecting relevant attorney and expert fees. This and any other supporting evidence, as well as Highmark's briefing, must provide sufficient detail and analysis to allow the Court to review the requested fees under the hybrid lodestar approach. *See Maxwell v. Angel-Etts of Cal.*, 53 Fed. Appx. 561, 568 (Fed. Cir. 2002) (applying hybrid lodestar approach to fee award under section 285).[10] Allcare may file a response thirty days after the date Highmark's brief is filed. Allcare's response may address the reasonableness of Highmark's requested fees, and the impact any

---

[10] By allowing Highmark to file invoices under seal while limiting it to seeking fees based on the conduct set out in this opinion and order and by requiring Highmark to provide sufficient detail so that its request for fees may be properly analyzed, the Court has essentially granted the relief requested by Highmark in its Motion for Leave to File Under Seal (doc. #551) and its Motion for Leave to File, Under Seal, An Appendix in Further Support (doc. #555), while taking heed of the concerns expressed by Allcare in its response. Thus, these motions by Highmark are DENIED as MOOT. Highmark has also filed a Motion to Strike (doc. #561), which seeks to strike proposed findings of fact and conclusions of law filed by Allcare in December 2009, well after briefing of Highmark's motion for exceptional-case finding was closed. The Court did not consider Allcare's late-filed proposed findings and conclusions in this opinion and order and, therefore, Highmark's motion to strike is also DENIED as moot.

alleged litigation misconduct by Highmark should have on the amount of fees. Highmark may file a reply twenty days after the date Allcare's response is filed.

SIGNED April 1, 2010

/s/
TERRY R. MEANS
UNITED STATES
DISTRICT JUDGE

APPENDIX C

IN THE UNITED STATES DISTRICT COURT FOR THE NORTHERN DISTRICT OF TEXAS FORT WORTH DIVISION

HIGHMARK, INC.,

v.

ALLCARE HEALTH MANAGEMENT SYSTEMS, INC.,

CIVIL NO. 4:03-CV-1384-Y

ORDER GRANTING MOTIONS TO RECONSIDER, GRANTING MOTIONS FOR GUIDANCE, AND DENYING MOTIONS TO STRIKE

Before the Court are the motions for reconsideration of the Opinion and Order Granting Motion for Exceptional-Case Finding and Attorneys' Fees ("the Opinion and Order") (doc. #566) filed by Joseph Cleveland and the firm of Brackett & Ellis, PC; V. Bryan Medlock and the firm of Sidley Austin, LLP; R. Darryl Burke, Christopher J. Harrington, Mike McKool Jr., Luke McLeroy and the firm of McKool Smith, P.C.; and Steven Hill and the firm of Hill, Kertscher & Wharton, LLP (docs. #586, 588, 590, 591, and 594, respectively). Plaintiff Highmark, Inc., has filed a motion to strike each of the motions

for reconsideration (docs. #606, 607, 608, 609). Also before the Court is the Motion Requesting Court's Guidance on Privilege Issues (doc. #596) filed by Medlock and Sidley Austin, in which Cleveland and Brackett & Ellis have joined (doc. #599). Burke, Harrington, McKool, McLeroy, and McKool Smith have filed a Motion Regarding In-Camera Review (doc. #605).

Each of the motions for reconsideration raises the issue of the Opinion and Order's compliance with the procedural requirements of Federal Rule of Civil Procedure 11 in sanctioning the moving attorneys. A motion for Rule-11 sanctions must be filed separately from any other motion. Fed. R. Civ. P. 11(c)(2). And whether the issue of sanctions under Rule 11 is raised by a motion or by the Court sua sponte, the Court must provide the attorney or firm to be sanctioned notice and an opportunity to respond and address the allegedly sanctionable conduct. *See Marlin v. Moody Nat'l Bank, N.A.*, 533 F.3d 374, 377 (5th Cir. 2008).

In the Court's estimation, the issue of sanctions was raised by Highmark's motion for exceptional-case finding. Throughout that motion, Highmark discusses the conduct of counsel for defendant Allcare Health Management Systems, Inc. ("Allcare"), particularly Hill. Admittedly, there is no explicit request for Rule-11 sanctions against defense counsel in Highmark's brief. But Highmark notes the "unprofessional behavior of [defense] counsel," points to "the behavior of Allcare and its counsel" as a basis for an exceptional-case finding and Rule-11 sanctions, and cites in its brief various specific examples of conduct by defense counsel including discovery

gamesmanship, assertion and maintenance of frivolous claims and defenses, misrepresentations to the United States District Court of the Western District of Pennsylvania, and failure to perform an adequate pre-filing investigation into Allcare's claims of infringement. Indeed, at one point the motion points out that "Rule 11 . . . allows imposition of sanctions on law firms as well as individual lawyers." The motion was served on each of the attorneys and firms now seeking reconsideration. Why a motion invoking Rule 11, noting the Court's authority to sanction attorneys and law firms, and detailing the specific sanctionable conduct engaged in by defense counsel did not put the moving attorneys on notice that they were exposed to sanctions is unclear.

Nevertheless, it is true that Highmark combined its Rule-11 arguments with its exceptional-case arguments and did not expressly request sanctions against the attorneys. Thus, to ensure strict compliance with Rule 11, the Court GRANTS the motions to reconsider to the extent that they seek reconsideration of the Opinion and Order based on its failure to comply with the procedural requirements of Rule 11. The Court hereby provides NOTICE to Joseph Cleveland and the firm of Brackett & Ellis, PC; V. Bryan Medlock and the firm of Sidley Austin, LLP; R. Darryl Burke, Christopher J. Harrington, Mike McKool Jr., Luke McLeroy and the firm of McKool Smith, P.C.; and Steven Hill and the firm of Hill, Kertscher & Wharton, LLP, of its intent to sanction them under Rule 11. These attorneys and firms must respond, no later than May 26, 2010, and show cause as to why they should not be sanctioned in accordance with the Opinion and Order. The factual basis of the Court's intended

sanctions is that set out in the Opinion and Order and the facts alleged in Highmark's motion for exceptional-case finding (doc. #513). If any attorney or firm believes that its briefing on its motion to reconsider contains all of the factual support and argument for reversal or modification of the order imposing sanctions, it may so indicate by merely failing to file a response to this show-cause order. In that event, the Court will deem the motion and briefing on the motion to reconsider as the attorney's timely-filed response to this show-cause order.

As for the motions for guidance on privilege issues and the motion regarding in-camera review, although the sanctions issue was initially raised by Highmark, that issue is now being pursued by the Court. The Court will assess whether defense counsel's conduct warrants sanctions and any appropriate sanctions will be paid to the Court, not Highmark. Highmark, therefore, has no need to file a response and no need for access to privileged information. Thus, to address any concerns regarding the ability of the attorneys sanctioned in the Opinion and Order to present appropriate evidence on the issue of sanctions without waiving attorney-client privilege, those attorneys are ORDERED to file any documents bearing on the issue of sanctions along with their responses and may do so in accordance with the ex-parte procedures set out in the local rules. To this extent, the motions for guidance are GRANTED, and this remedy resolves the issue raised in the motion for in-camera review.

Finally, the Court DENIES Highmark's motions to reconsider. In the motions, Highmark concedes that

procedural compliance with Rule 11 and payment of sanctions to the Court are issues between the Court and the sanctioned attorneys. Highmark contends, however, that to the extent the motions present new evidence they may affect the exceptional-case finding against Allcare. Hence, Highmark insists that it must be given access to all of the evidence offered to the Court in support of the motions to reconsider, including the information redacted by the defense attorneys out of concern for attorney-client privilege. To be clear, the motions to reconsider, this order, and any future orders regarding sanctions have no bearing on the exceptional-case finding, even to the extent that new evidence contrary to the Court's findings in the Opinion and Order is presented in connection with the sanctions issue. Highmark moved for an exceptional-case finding against Allcare and Allcare had a full and fair opportunity to respond. In responding to the motion for exceptional-case finding, Allcare presented an extensive affidavit by Hill. If Allcare wished to rely on affidavits by any of the other attorneys named in the Opinion and Order it could have done so. It did not, and any new evidence presented in connection with the sanctions issue will not cause this Court to revisit the exceptional-case finding against Allcare. *See Dos Santos v. Bell Helicopter Textron, Inc. District*, 651 F. Supp. 2d 550, 553 (N.D. Tex. 2009) (discussing the role of a motion to reconsider under Rule 54). The facts as relevant to that finding have been established.

SIGNED May 6, 2010.

/s/
TERRY R. MEANS
UNITED STATES
DISTRICT JUDGE

APPENDIX D

IN THE UNITED STATES DISTRICT COURT FOR THE NORTHERN DISTRICT OF TEXAS FORT WORTH DIVISION

HIGHMARK, INC.,

v.

ALLCARE HEALTH MANAGEMENT SYSTEMS, INC.,

CIVIL NO. 4:03-CV-1384-Y

OPINION AND ORDER RECONSIDERING AND VACATING SANCTIONS

Before the Court is the issue of sanctions imposed upon certain attorneys representing Defendant, Allcare Health Management Systems, Inc. ("Allcare"), in the Opinion and Order Granting Motion for Exceptional-Case Finding and Attorneys' Fees ("the Opinion and Order") (doc. #566). Those attorneys filed motions to reconsider the sanctions and, upon reconsideration, the Court will vacate the sanctions portion of the Opinion and Order.

I. BACKGROUND

The factual background of this case involving United States Patent No. 5,301,105 ("the '105 patent") is set out in the Opinion and Order and there is no reason to restate it here. After final

judgment was entered in its favor, plaintiff Highmark, Inc. ("Highmark"), filed a motion ("the exceptional-case motion") seeking attorneys' fees under 35 U.S.C. § 285, Federal Rule of Civil Procedure 11, and the Court's inherent authority, arguing that the conduct of Allcare and certain of its counsel warranted an award of fees. The Court concluded that this case is exceptional as defined in § 285 and accordingly awarded fees to Highmark. The factual basis and legal analysis supporting that decision are set out in the Opinion and Order and nothing in this order is meant to alter or amend it.

Most of the conduct discussed by Highmark in the exceptional-case motion involved not only Allcare, but Allcare's counsel. Again, Highmark cited Rule 11 as an alternative basis for recovering fees and costs and in one portion of its motion even pointed out that "Rule 11 . . . allows imposition of sanctions on law firms as well as individual lawyers." (ECF[1] Mot. Br., doc. #515, at 18 (quoting *United Stars Indus., Inc. v. Plastech Engineered Prods., Inc.*, 525 F.3d 605, 609 (7th Cir. 2008). Having had allegations of attorney misconduct brought to its attention—allegations that the Court concluded were supported by the evidence—the Court sanctioned the attorneys it concluded were involved: Steven Hill and his firm, Hill, Kertscher, & Wharton, LLP; V. Bryan Medlock and his firm, Sidley Austin, LLP; Joseph F. Cleveland and his firm, Bracket & Ellis; and Mike McKool Jr., Christopher Harrington, Luke McLeroy,

---

[1] The Court uses "ECF" as an abbreviation for exceptional-case finding to refer to the briefing and appendices submitted in connection with Highmark's motion for exceptional-case finding.

and R. Darryl Burke and their firm, McKool Smith LLP ("the Attorneys").

The Attorneys responded to the Opinion and Order with motions to reconsider, arguing that the requirements of Rule 11 had not been met. Specifically, the Attorneys argued that Rule 11 requires that when a party seeks the imposition of sanctions it must do so by a motion separate from any other motion. Highmark's motion was not a proper basis for the imposition of sanctions, the Attorneys argued, because it combined arguments under section 285 and the Court's inherent authority with Rule 11 arguments. The Attorneys further pointed out that before the Court may assess sanctions sua sponte it must issue an order to show cause describing the conduct that the Court has determined warrants sanctions and provide the attorney to be sanctioned a reasonable opportunity to respond. Based on these arguments, the Court granted the motions to reconsider and in the same order required the Attorneys to respond and show cause as to why they should not be sanctioned. The Court stated that the factual bases for the potential sanctions were those set out by Highmark in its exceptional-case motion and those set out in the Opinion and Order.

Now before the Court are the Attorneys' responses to the show-cause order. The Court will review the conduct of each of the Attorneys below.

II. DISCUSSION

A. Rule 11 Standards

Federal Rule of Civil Procedure 11 imposes certain standards upon attorneys who present documents to a federal court. Specifically, Rule 11(b) provides:

> By presenting to the court a pleading, written motion, or other paper—whether by signing, filing, submitting, or later advocating it—an attorney or unrepresented party certifies that to the best of the person's knowledge, information, and belief, formed after an inquiry reasonable under the circumstances:
>
> (1) it is not being presented for any improper purpose, such as to harass, cause unnecessary delay, or needlessly increase the cost of litigation;
>
> (2) the claims, defenses, and other legal contentions are warranted by existing law or by a nonfrivolous argument for extending, modifying, or reversing existing law or for establishing new law;
>
> (3) the factual contentions have evidentiary support or, if specifically so identified, will likely have evidentiary support after a reasonable opportunity for further investigation or discovery; and
>
> (4) the denials of factual contentions are warranted on the evidence or, if specifically so identified, are reasonably based on belief or a lack of information.

"If, after notice and a reasonable opportunity to respond, the court determines that Rule 11(b) has been violated, the court may impose an appropriate sanction on any attorney, law firm, or party that violated the rule or is responsible for the violation. Absent exceptional circumstances, a law firm must be held jointly responsible for a violation committed by its partner, associate, or employee." Fed. R. Civ. P. 11(c).

B. Analysis

1. Steven Hill and the law firm of Hill, Kertscher, & Wharton, LLP

a. The Motion to Dismiss Before the United States District Court for the Western District of Pennsylvania

In the Opinion and Order, the Court sanctioned Hill for, among other things, his participation in a motion to dismiss for lack of personal jurisdiction filed in the United States District Court for the Western District of Pennsylvania ("the Western District"). This case was originally filed in that court. In connection with the motion, Robert Shelton, an Allcare vice president, submitted a declaration in which he discussed a survey used by Allcare to identify companies using systems that might infringe the '105 patent. This survey, the Seaport Survey, is discussed at length in the Opinion and Order. (Op. & Order at 42-45.) This Court found that Allcare represented to the Western District that it did not control the substantive aspects of the survey, the intended result being that the Western District would not regard the survey as a contact, for personal-jurisdiction purposes, by Allcare with Pennsylvania. As discussed in the Opinion and Order, the evidence shows that Allcare controlled all of the substantive aspects of the survey, from the questions asked to the companies surveyed. (*Id.*) This Court concluded that Allcare's factual arguments to the Western District, were at best obfuscatory and, thus, tested the bounds of zealous advocacy.

Hill argues that he cannot be sanctioned based on the motion to dismiss because he did not "present" the motion. (Hill's SCO[2] Resp. App., docs. #614 & 615, at 381-82.) Hill explains that he did not sign the motion, did not participate in any hearing before the Western District, and did not enter an appearance before that court until after the motion was filed. (*Id.*) Consequently, Hill insists that he did not in any way knowingly participate in an effort to mislead that court regarding Allcare's control over the Seaport Survey. (*Id.* at 381.) Further, Hill explains that the Seaport Survey itself predated his representation of Allcare, and that he had no part in designing or implementing the survey. (*Id.*)

On the signature issue, Hill cites a line of cases from the United States Court of Appeals for the Fifth Circuit beginning with *Robinson v. National Cash Register Co.*, 808 F.2d 1119 (5th Cir. 1987) that limit sanctions under Rule 11 to a signing attorney. But as explained in *Robinson*, it was the text of the rule at the time that limited its application. *See Robinson*, 808 F.2d at 1125, 1128-29. Prior to the 1993 amendments, Rule 11 did in fact authorize sanctions only against an attorney or pro se litigant who had "signed [a paper] in violation of this rule." Fed. R. Civ. P. 11 (West 1992). After the 1993 amendment, sanctions may be imposed against an attorney who "present[s] to the court (whether by signing, filing, submitting, or *later advocating*)" a

---

[2] The Court uses "SCO" as an abbreviation for show-cause order in citations to documents.

document that falls short of the rule's standard.[3] Fed. R. Civ. P. 11 (West 2006) (emphasis added).

And to the extent that Hill's arguments that he did not sign relevant pleadings could be taken as an argument that he did not advocate the related position taken by Allcare, such an argument is contradicted by the record in this case. The evidence shows that Hill has been involved in this case since its earliest stages, that he, along with Shelton, developed Allcare's strategy for this case, and that he has advocated Allcare's positions throughout this litigation. Hill, in his declaration in response to the show-cause order, states that his representation of Allcare began in March 2002. (Hill's SCO Resp. App. at 381.) Medlock, in his declaration in response to the show-cause order, states that in May of 2002 he met with Hill in connection with Allcare's efforts to prosecute the '105 patent. (Medlock SCO Resp. App., doc. #617, at p. 5.) Thereafter, Hill represented Allcare in connection with its efforts to prosecute the '105 patent and was its chief legal strategist and counsel regarding such efforts. Hill was the attorney who engaged in pre-suit communications with Highmark. (ECF Resp. App., doc. #527, at 121-25.) And, once Highmark filed suit, it was Hill and Shelton who led what Medlock describes as a "strategy session" on April 17, 2003, during which they discussed the construction of the '105 patent, rulings in *Allcare Health Management Systems, Inc. v. Trigon Healthcare, Inc.*, 1:02-CV-756-A (E.D. Va.

---

[3] Hill's citation of this outdated line of cases does nothing to persuade the Court that sanctions are not appropriate.

Feb. 3, 2003) ("*Trigon*")[4], and potential infringement claims against Highmark. (Medlock SCO Resp. App. at p.7-17.) Despite any formal appearances or designations with the courts in which this case has proceeded, Hill has consistently been treated as Allcare's lead counsel by Highmark, by co-counsel, and by Allcare itself. (*Id.*; Medlock SCO Resp. App. at 9 (describing Hill as "lead counsel"); (ECF Resp. App. at 121-25 (detailing Hill's efforts prior to suit); Doc. #285 (letter from Cynthia Kernick, counsel for Highmark.) It is in this context that Hill insists that he did not advocate the positions taken by Allcare discussed in the Opinion and Order, despite the fact that he is listed as Allcare's counsel on the motion.

Hill also posits that he did not knowingly advocate any misleading factual representation to the Western District. But under Rule 11, an attorney's conduct is measured by "an objective, not subjective, standard of reasonableness under the circumstances." *Whitehead v. Food Max of Miss., Inc.*, 332 F.3d 796, 802 (5th Cir. 2003). Although not involved in the design and implementation of the survey, Hill cannot claim ignorance of it, as he claims to have relied on it in developing his understanding of Highmark's system as part of his element-by-element infringement analysis. (ECF Resp. App. at 137, 139; Hill's SCO Resp. App. at 384.) Hill was relying on the survey results in July 2002, well before the motion to dismiss was filed in the Western District.

---

[4] *Trigon* is a case in which Allcare was prosecuting the '105 patent against Trigon Healthcare, Inc. ("Trigon"), another user of a health-care information-management system. *Trigon* and its relation to this case is discussed at length in the Opinion and Order.

(Hill's SCO Resp. App. at 384.) And, as just discussed, Hill was Allcare's chief counsel at the time of the motion to dismiss and was listed as Allcare's counsel on the motion.

b. Pre-filing Investigation

Rather than dismiss, the judge in the Western District transferred the case to this Court. Shortly after the transfer, Allcare filed its answer and counterclaims (doc. #22). The answer and counterclaim are signed by Medlock, with Hill listed as additional counsel. The filing of counterclaims without an adequate pre-filing investigation is another basis for sanctions in the Opinion and Order. Hill, who was also Allcare's lead counsel in *Trigon*, insists that he performed an element-by-element comparison of Highmark's system, as he understood it, to the relevant claims of the '105 patent. (ECF Resp. App. at 137, 139, 163.)

One source of information on which Hill claims to have relied is the results of the Seaport Survey. In his declaration, Shelton explains that he is Allcare's director and vice president for licensing and that, as part of this job, it is his duty to identify potential infringers. Shelton used various sources of public information to research systems used by companies in the healthcare industry to connect to insurance providers and to process authorizations and referrals electronically in the manner Allcare believed to be covered by the '105 patent. (ECF Resp. App. at 114.) To further focus his research, Shelton arranged for the Seaport Survey to be conducted by an independent survey company between August 17, 2001, and June 26, 2002. (*Id.*) Companies surveyed were told that the survey's purpose was to "identify

organizations that are the leaders in the electronic processing of authorizations and referral requests." (ECF Mot. App., docs. # 516 & 517, at 520.) As this case demonstrates, the answers provided were actually used to identify potential infringers of the '105 patent and, in turn, used by Allcare to demand that the potential infringer purchase a license to the patent.

Hill, in his declaration in response to the show-cause order, states that his representation of Allcare began in March 2002, after the Seaport Survey had been initiated. (Hill's SCO Resp. App. at 381.) Hill stresses that he did not advise Allcare to undertake the survey and did not participate in the survey. (*Id.*) Nevertheless, he relied on the responses to the survey returned by Highmark and Trigon. Specifically, Hill states that by April 2002, he had performed an element-by-element comparison of Highmark's system with the relevant claims of the '105 patent, and that this comparison was based in part on the Seaport Survey results. (ECF Resp. App. at 137.) Hill came to the general conclusion that the Trigon and Highmark systems were similar in that both are "comprehensive internet-based system[s] connecting, among other things, network health providers to a central health insurance company for permitting the insurer to provide online authorizations of medical procedures to said providers" and "for processing and paying proper medical claims, and pending or denying claims which were not entitled to payment." (ECF Resp. App. at 138.) Consequently, Hill and Allcare believed it was appropriate to contact Highmark and request that it purchase a license to the '105 patent. (*Id.*)

In the Opinion and Order, the Court explained that the mere "threat of a suit forces the alleged infringer to investigate the patentee's allegations and the existence of a valid patent, which is itself difficult and costly, and forces the alleged infringer to decide whether to deny infringement and be exposed to costly litigation or enter into licensing negotiations." (Op. & Order, at 26 n.4.) However, the above statement by Hill of his understanding of the Trigon and Highmark systems and their similarity to each other embodies the analysis that Allcare has provided to support its first request, made in April 2002, that Highmark license the '105 patent. In the patent context, particularly in the context of the integrated computer-based system embodied by the '105 patent, Hill's rather broad conclusion that the Highmark and Trigon systems shared the general trait of connecting health-care providers to an insurance company to electronically process authorizations and referrals does not reflect the depth of analysis that would justify pursuing an infringement claim against Allcare. *Cf. S. Bravo Sys. v. Containment Techs. Corp.*, 96 F.3d 1372, 1374-75 (Fed. Cir. 1996) (stating that Rule 11 authorizes sanctions for filing claims that are "legally unreasonable [or] without factual foundation"); *also cf. View Eng'g, Inc. v. Robotic Vision Sys.*, 208 F.3d 981, 986 (Fed. Cir. 2000) (stating that before a counterclaim of infringement is filed, the law firm advancing such claim must compare the patent's claims to the accused device and conclude that there is a reasonable basis for a finding of infringement). The conclusions reflect no analysis of the details of Highmark's system or of the '105 patent that have proven central to this case, such as whether

participants in Highmark's system are "integrated" in the manner that the special master ultimately determined to be required by claim 102, or whether Highmark's system is able to propose a mode of treatment, as ultimately found to be required by claim 52.

The Court also faulted Hill for improperly delegating his duty to conduct a pre-filing investigation to Shelton. In his declaration in response to Highmark's exceptional-case motion, Hill provides several assurances that he performed a pre-filing investigation using various sources of information. But his assurances are generally conclusory, lacking any real discussion of his research or analysis efforts. On the other hand, Allcare's response to the exceptional-case motion relied in part on portions of its interrogatory responses. (Op. & Order at 14-15; ECF Resp. App. at 163 (citing ECF Mot. App. at 176-179.) A review of the interrogatory responses reveals that Allcare described its efforts to investigate Highmark's system prior to April 2002 in terms of actions taken by Shelton. For example, in response to Highmark's interrogatory calling upon Allcare to describe its investigation into Highmark's system, Allcare responded that it was Shelton who initiated the Seaport Survey and, after review of the results, Shelton who concluded that further investigation was warranted. (ECF Mot. App. at 162-66.) Shelton then apparently performed the additional investigation, reviewing Highmark's website and other internet sources, as well as performing other "follow-up research." (*Id.*) Shelton then sent the April 2002 letter to Highmark, stating Allcare's belief that Highmark's system infringed the

'105 patent and suggesting that Highmark license the patent to avoid litigation. (*Id.* at 164, 342-44.) According to the interrogatory responses, Allcare began its efforts to have Highmark purchase a license to the '105 patent after Shelton "formed the opinion" that Highmark's system was infringing it; Hill is not mentioned with regard to the pre-filing investigation until October 2002. (*Id.*)

Allcare's focus on Shelton's pre-filing efforts, as opposed to Hill's, is due at least in part to Allcare's concern for privilege issues. In its response to Highmark's interrogatory, Allcare objects that the interrogatory requests attorney-client privileged information and work product. (ECF Mot. App. at 161.) And rather than detail Hill's pre-filing efforts in response to the exceptional-case motion, Allcare relied largely on a declaration by Hill providing general assurances that a pre-filing investigation was conducted and citing the interrogatory response detailing Shelton's efforts. In its brief in response to the exceptional-case motion, Allcare again notes its privilege concerns.

Allcare is not required to disclose privileged information in defense of its pre-filing efforts. But privilege issues notwithstanding, Allcare and its counsel must comply with the law, including Rule 11. *See Knorr-Bremse Systeme Fuer Nutzfahrzeuge GmbH v. Dana Corp.*, 383 F.3d 1337, 1344 (Fed. Cir. 2004) (stating that "the duty to respect the law is undiminished" even where the attorney-client privilege applies). Highmark's motion for exceptional-case finding clearly raised the issue of whether Allcare's conduct in this case, including its pre-filing investigation, comported with 35 U.S.C.

§ 285 and Rule 11. In responding to Highmark's arguments, Allcare was not entitled to at once rely on the opinion of counsel to justify its filing of counterclaims but withhold the details of counsel's pre-filing efforts—the sort of details that would allow the Court to verify the adequacy of counsel's efforts—based on privilege. *See In re Seagate Tech, LLC*, 497 F.3d 1360, 1372 (Fed. Cir. 2007) (stating that the attorney-client privilege is not to be used at once as a sword and shield). Federal courts are accommodating regarding privilege issues and allow ex-parte and in-camera filing where appropriate. Nevertheless, Allcare essentially chose to rely on Shelton's investigation and analysis in responding to the exceptional-case motion, at least as to the time leading up to Allcare's first contact with Highmark in April 2002.

Hill now explains that he did not defer to Shelton's investigation. Rather, he worked with Shelton in investigating Highmark's system, independently assessed the information available, and confirmed Shelton's conclusions. (Hill's SCO Resp. App. at 382.) Specifically, Hill states that, based on the available literature, research he and Shelton performed, and the Seaport Survey results, he concluded that Highmark's system included the following features:

(a) a web-based portal supported by one or more data processors and offering links to pertinent health care information for patients, health care providers and employers;

(b) an online authorization system supported by one or more data processors, permitting (1) a physician office or hospital to request using an

input means an authorization from the insurer using a form wherein the requesting physician would enter an ICD-9 diagnostic code and a CPT treatment code; and (2) communicating a decision back to the physician relating to the determination in response to the authorization request [sic];

(c) a medical management system supported by one or more data processors which supported the insurance company in evaluating and deciding whether to approve the authorization requests received the online authorization requests, and then storing the record regarding the decision made for future reference, if needed [sic];

(d) a claims processing and payment system (a "payment means") supported by one or more data processors working with the medical management system to prevent payment where authorization was required, but not obtained; and

(e) a claims data warehouse supported by one or more data processors where processed claims are stored and used to accumulate useful and extensive medical information about the population of insured persons.

(Hill's SCO Resp. App. at 383.)

While these conclusions are detailed, there is no detailed discussion in the response to the show-cause order of how Hill reached them based on the evidence he had reviewed. Much as he did in response to the exceptional-case motion, Hill simply states that he reviewed certain sources of information, performed the necessary analysis, and reached these conclusions. But merely reciting the

conclusions reached, without providing more detail of how they were reached, such as how Hill's understanding of Highmark's system was supported by a particular piece of evidence or how that understanding compared to the claims of the '105 patent, makes it difficult for the Court to verify that a proper pre-filing investigation was done. *Cf. Cupit v. Fid. & Deposit Co. of Md. (In re Cupit)*, 194 Fed. Appx. 257, 258 (5th Cir. Aug. 24, 2006) (noting the burden of an attorney who has been notified of potential sanctions to show why he should not be sanctioned); *also cf. Ashcrof v. Iqbal*, 129 S. Ct. 1937, 1949 (2009) (stating that to meet the pleading burden imposed by Rule 8 the plaintiff must state sufficient facts to allow the court to infer that his claim is plausible). If an attorney could, in response to a show-cause order, show compliance with Rule 11 merely by recounting conclusions and making general assurances of a proper pre-filing investigation, Rule 11 would be a dead letter.

In May 2002, Allcare filed suit against Trigon, with Hill acting as its counsel. (ECF Resp. App. at 138.) Hill began discussions with Highmark on behalf of Allcare, disclosing in "considerable detail the basis for Allcare's contention that Highmark['s system] infringed certain claims, including claim 52, of the '105 patent." (*Id.* at 138.) In July 2002, Hill wrote a letter to Highmark's counsel referring to Shelton's April 2002 letter, discussing Allcare's research into Highmark's system, asserting that the '105 patent is not limited to a "diagnostic smart system" and, in any event, that Highmark's system is smart, and urging Highmark to purchase a license to the patent. (Hill's SCO Resp. App. at 302-05.) By August 2002, Hill claims to have performed an element-by-element

comparison of claim 52's elements against the Highmark system that not only incorporated the information he and Shelton gathered from the internet and other public sources and the Seaport Survey results, but also information on Highmark's system disclosed by Highmark during its discussions with Allcare. (ECF Resp. App. at 139.) Hill informed Highmark's counsel that he believed Allcare's infringement analysis in *Trigon* applied to Highmark's system, because "both systems pertained to the electronic authorization capabilities whereby network providers would use a personal computer to electronically complete an authorization form by filling in ICD9 and CPT codes and then transmit to the insurance company for authorization." (*Id.*) According to Hill, he concluded Highmark's system was "necessarily a utilization review system [covered by the '105 patent], requiring a database of predetermined procedures requiring authorization, as well as other forms of utilization review, such as medical appropriateness review." (*Id.*) Hill explains that when he informed Highmark's counsel of these observations, she did not disagree. (*Id.*) Hill also wrote another letter to Highmark in August 2002, this time including a side-by-side comparison of the Trigon and Highmark systems. (Hill's SCO Resp. App. 306-25.)

The element-by-element analyses Hill claims to have done as of April 2002 and as of August 2002 specifically refer to claim 52. Most notably, he states that "by August 2002, [he] had performed an element-by-element comparison of claim 52's elements with the use of the Highmark system and had determined that there was a factual basis for believing" the system infringed claim 52. (*Id.* at

139.) The analysis Hill states that he performed after *Trigon* was filed specifically refers to claim 52 as well. (*Id.* at 163.)

In response to the show-cause order, Hill hardly addresses claim 102, arguing only that he did not sign any pleading in connection with that claim. But as has been shown, Hill has been Allcare's chief counsel since before this case was filed and, when pressed to explain its pre-filing efforts, Allcare relied on Hill. And any argument by Hill that he is not responsible for the filing of allegations of infringement as to claim 102 is countered by Hill's assertion that he performed the pre-filing investigation relevant to this claim. (ECF Resp. App. at 154.) Hill designated a portion of his declaration in response to the exceptional-case motion as addressing the issue of "Assertion of Claim 102." (*Id.* at 136.) In the designated portion, Hill states that he performed an element-by-element comparison of claim 102 to Highmark's system. (*Id.* at 154.) But Hill makes this statement in the context of discussing Allcare's reasons for maintaining the allegations as to claim 102, without elaborating on his pre-filing investigation. This, despite the fact that Highmark had specifically argued that an exceptional-case finding was warranted due to Allcare's deficient pre-filing investigation as to claim 102. (ECF Mot. Br. at 12.) And Hill has not expounded upon his pre-filing efforts in response to the show-cause order, despite the Court's conclusion in the Opinion and Order that those efforts were deficient.

After this, the only discussion of pre-filing investigation specifically related to claim 102, Hill

goes on to discuss similarities between the terms of claim 52 and claim 102, as well as portions of Holland's report and deposition, including a claim chart, that he contends support Allcare's allegations based on claim 102. Holland's report was issued and his deposition taken after Allcare filed its counterclaims. And the claim chart is dated November 8, 2004, months after the amended answer asserting a counterclaim of infringement of 102 was filed. Thus, none of these items could be part of a pre-filing investigation.

The similarities might be taken to show that pre-filing efforts as to allegations involving claim 52 also support allegations involving claim 102. (ECF Resp. App. at 152-54.) But the language of the claims, both on its face and as construed, is different. For example, as Hill recognizes in his declaration, claim 52 covers a "comprehensive" health-care-management system, while claim 102 covers an "integrated" system. (*Id.* at 152.) Discussing the use of these terms in the '105 patent's claims, the special master concluded that, although these terms are used "in a somewhat overlapping manner," "comprehensive" is used in the patent to indicate the scope of the patent's participants and functions while "integrated" is used to indicate the interaction of the participants and the system's components. (Rep. on Claim Constr., doc. #367, at 11.) After Hill's discussion of the similarity of the terms of claims 52 and 102, only post-filing efforts involving experts are discussed (ECF Resp. App. at 154-56.) Ultimately, Highmark questioned Allcare's pre-filing investigation relating to claim 102. In response, the Court concluded that Highmark's arguments were well founded and, accordingly, imposed sanctions

and followed with a show-cause order to ensure compliance with Rule 11. Yet at no point has there been any meaningful explanation of the pre-filing investigation that supported Allcare's assertion that claim 102 had been infringed.

One of the Court's primary criticisms of Hill and the other attorneys sanctioned in the Opinion and Order was their reliance on developments in *Trigon*—whether it was the pre-filing investigation done in that case or the summary-judgment rulings issued by the *Trigon* court—to defend the merits of Allcare's case against Highmark. As the Court explained in the Opinion and Order, reliance on *Trigon* only indicates that an adequate pre-filing investigation was done in this case if Allcare's counsel compared the systems used by Highmark and Trigon. Hill addresses this criticism by offering up the August 2002 letter and the comparison of the responses given by Trigon and Highmark to the Seaport Survey.

Strangely, although Allcare relies heavily on the results of the Seaport Survey in defending its pre-filing investigation, Hill's comparison of the responses and the Seaport Survey responses themselves were not discussed in Allcare's response to the exceptional-case motion. The comparison was not part of the record at the time the exceptional-case motion was decided, and the Seaport Survey itself was submitted by Highmark rather than Allcare. Allcare's response to the motion for exceptional-case finding, which relied heavily on a declaration by Hill, did not discuss in any detail Allcare's use of the Seaport Survey and other information available on Highmark's system to

compare it to Trigon's system. In fact, the response and Hill's declaration discuss claim charts from *Trigon* that were annotated with information produced by Highmark during discovery in this case, implying that claim charts or other forms of infringement analysis in support of Allcare's claims against Highmark did not incorporate information related to Highmark's system until after the counter-claims were filed. (ECF Resp. Br., doc. #526, at 1, n.2.) And to the extent the response to the exceptional-case motion did address similarities between the Highmark and Trigon systems, it was in passing, without factual detail or analysis, and did not address what has become a key element of this case, claim element 52(c). (*Id.* at 2, n.4.)

Having been told by Hill in August 2002 that he believed the systems used by Trigon and Highmark were "equivalent if not identical in all material respects," Highmark's counsel requested to see Allcare's infringement contentions against Trigon in chart form. (ECF Resp. App. at 140.) Hill explains that he provided Highmark a copy of charts showing his infringement analysis in *Trigon* and that later, during the early stage of discovery in this case, he provided an additional chart to Highmark reflecting Allcare's pre-filing investigation in *Trigon* and containing updated information produced by Highmark during discovery. (*Id.*)

The Court noted in the Opinion and Order that Allcare's reliance on the *Trigon* charts was typical of its response to the exceptional-case motion as a whole. Allcare and Hill's post-filing efforts were supported by documentary evidence, such as the annotated *Trigon* charts, while their pre-filing efforts

were not. Similarly, Hill asserted that he had consulted experts to confirm his infringement analysis before Allcare's claims against Highmark were filed. But the documentary evidence suggests that the relevant experts were not consulted until after the counterclaims were filed. (Op. & Order at 13-14; ECF Suppl. App., doc. #533, at 1-10.) The lack of detail in Hill's declaration regarding his infringement analysis and the information he gleaned from the various sources on which he purported to rely, coupled with the lack of documentary evidence of a pre-filing investigation by Hill, plus the evidence of Shelton's role in the pre-filing investigation, caused the Court to conclude that an inadequate investigation had been performed.

Finally, in connection with the pre-filing investigation, Hill points out that in February 2003, the summary-judgment rulings were issued in *Trigon*. (*Id.* at 142-43.) *Trigon* was filed in May 2002, and Hill explains that after a meeting with Highmark's counsel in October 2002, it was apparent that the *Trigon* litigation and Allcare's effort to have Highmark take a license of the '105 patent shared two major issues. (*Id.* at 143.) Both the *Trigon* litigation and Allcare's discussions with Highmark involved construction of claim element 52(c), and specifically the issue of whether it covered only a diagnostic smart system. And both the *Trigon* litigation and Allcare's discussions with Highmark addressed the adequacy of the disclosure of prior art by Allcare in securing the '105 patent, and the impact of such disclosure on validity and enforceability of that patent. (ECF Resp. App. at 141.) The *Trigon* Court issued summary-judgment rulings in February 2003. (*Id.* at 41-66.) That court

concluded that the '105 patent is enforceable and that element 52(c) is not limited to a diagnostic smart system. (*Id.* at 45, 57-65, 143.)

c. Shifting Claim Construction

The Court also cited Allcare's shifting claim construction as a basis for sanctioning Hill. Hill argues that sanctions are inappropriate on this basis because each claim construction had a good-faith basis in law and fact. While this may be true, the Court's point was that Allcare, without reasonable explanation, altered its claim construction after Allcare submitted its court-ordered proposed claim construction. That is, although Allcare's constructions subsequent to its proposed construction may have been substantively defensible, they unduly complicated Highmark's efforts to defend against Allcare's allegations and this Court's efforts to resolve the issue of claim construction.

Hill now explains that it is "not unusual" in patent litigation for a party to adjust its claim construction during the course of litigation. Although adjustments in a party's proposed construction may be common in an effort to reach an agreed construction, neither section 285 nor Rule 11 allows a party or its counsel to needlessly offer amended constructions over the course of a case. *See* Fed. R. Civ. P. 11(b)(1). And the Court entered a scheduling order in this case providing specific instructions regarding claim construction. Under the scheduling order, Allcare, as the party claiming patent infringement, was to submit a proposed claim construction in August 2004. (Initial Sched. Order, doc. #59, at ¶6.) Highmark would then submit a responsive proposed claim construction. Thereafter,

the parties were to confer and submit a joint claim-construction statement, which would contain the construction of the relevant claims to the extent that the parties had reached an agreement and would contain each party's proposed construction for terms that remained in dispute. Allcare could then file a motion for claim construction on the disputed terms.

Allcare timely filed its proposed claim construction under the Court's scheduling order, in which it construed, among other terms, the phrase from element 52(c) "data symbolic of symptoms for tentatively identifying a proposed mode of treatment." (ECF Mot App. at 392-93.) But Allcare then changed its proposed construction of this phrase in its motion for claim construction, (doc. #158), circumventing the response by Highmark and the attempt at reaching an agreement contemplated by the scheduling order. After the special master had conducted a claim-construction or "*Markman*" hearing, Allcare again altered its proposed construction in a chart of "claim terms at issue and the constructions of said terms that are acceptable to Allcare," which was disclosed to Highmark on November 15, 2006. (ECF Mot. App. at 411.)

Hill complains that he cannot be sanctioned based on the altered claim constructions because he was not given notice of constructions that concerned the Court so that he could respond to the show-cause order. But as the Court noted in the show-cause order, the factual basis that the Court believed warranted sanctions was that raised in Highmark's exceptional-case motion and set out in the Opinion and Order. Allcare's proposed claim construction, its motion for claim construction, and the chart of claim

terms were each identified as being the documents containing the relevant constructions. The fact that the Court did not identify a specific claim term is of no import because *any* alteration by Allcare of its claim construction that was not agreed to or was not with leave of court was contrary to the scheduling order if it came after it filed its proposed construction.

d. Preclusion Defenses

An additional ground for sanctions against Hill discussed in the Opinion and Order is Allcare's assertion of the defenses of res judicata and collateral estoppel. Hill first argues that he was not admitted to practice before this Court at the time that these defenses were filed. But as has been explained, Hill was Allcare's lead counsel since before this case was filed and he has advocated its positions throughout. In fact, this is confirmed by Hill's second argument on this point, which is that he researched the applicability of these defenses to this case and believed that asserting them was reasonable.

In support, Hill cites *Boston Scientific Corp. v. Schneider (Europe) AG*, 983 F. Supp. 245 (D. Mass. 1997), which discusses the circumstances under which a nonparty may be precluded from relitigating issues. Specifically, the court in *Boston Scientific* applied the doctrine of virtual representation in the patent-infringement context to preclude a party from litigating issues that had been previously litigated by a related entity in a separate suit. *See Boston Scientific Corp.*, 983 F. Supp. at 257-59. In so doing, that court described the doctrine of virtual representation as "an equitable theory rather than a crip rule with sharp corners and clear factual

predicates." *Id.* at 257. Privity between the party and nonparty "must be determined on a case-by-case basis" considering whether the issues in both the prior and current litigation are identical, whether the nonparty had actual or constructive notice of the prior litigation, and the equities of the case, including the nonparty's relationship with the party or participation in the prior litigation. *Id.* at 257-58, 259.

Hill explains that *Trigon* and Allcare's efforts to have Highmark license the '105 patent included identical issues, such as construction of the patent's claims. And Hill notes that he observed Highmark's counsel, Cynthia Kernick, at the hearing on the summary-judgment motions in *Trigon.* According to Hill, Kernick conferred with Trigon's counsel during the hearing to provide assistance with Trigon's arguments. (Hill's SCO Resp. App. at 398.) Thus, two of the elements of virtual representation—identity of interest and notice of the prior litigation—were met. And the third element, the balance of the equities, has at least some support (though it is hard to imagine how holding Highmark bound by the *Trigon* ruling could be equitable given the lack of relationship between the two and Highmark's very limited—and completely unofficial—role in the case).

e. Continued Pursuit of Infringement Allegations

Finally, the Court concluded in the Opinion and Order that Allcare and its counsel maintained their allegations of infringement as to claims 52 and 102 even after those claims were shown to be without support. The Attorneys invoke the "snapshot" rule, arguing that a court must evaluate a filing for

compliance with Rule 11 at the time of filing. "Like a snapshot, Rule 11 review focuses upon the instant when the picture is taken—when the signature is placed on the document." *Thomas v. Capital Sec. Servs.*, 836 F.2d 866, 874 (5th Cir. 1988). Recognizing that the snapshot rule remains the law of this circuit at least as to sanctions imposed based on the filing or signing of a document, *see Marlin v. Moody Nat'l Bank N A*, 533 F.3d 374, 380 (5th Cir. 2008), since *Thomas* Rule 11 has been amended to provide that "later advocating" a baseless position is a ground for sanction. There is simply no way that the a snapshot rule phrased in terms of the time of filing can be applied to the plain language of Rule 11, which provides for sanctions where an attorney advocates a baseless position after the relevant filing is made. As the notes to the 1993 amendment explain, "[t]he rule continues to require litigants to 'stop-and-think' before initially making the legal or factual contentions. It also, however, emphasizes the duty of candor by subjecting litigants to potential sanctions for insisting upon a position after it is no longer tenable . . . ." Thus, whether Allcare's allegations were tenable after the events discussed in the Opinion and Order and whether Hill advocated those allegations become the critical issues.

In the Opinion and Order, the Court determined that the Attorneys are subject to sanctions because they "continued to pursue the infringement claims against Highmark well after those claims had been shown to be without merit." (Op. and Order at 48.) As discussed, Hill began his representation of Allcare regarding prosecution of the '105 patent in March 2002. Hill was the attorney who performed the pre-filing investigation into Highmark's system, Hill was

the attorney who developed Allcare's construction of the '105 patent generally and in connection with *Trigon*, and Hill was the attorney who presented Allcare's theory of infringement at the April 2002 strategy session. Hill has been regarded as Allcare's lead counsel throughout this litigation, with even Hill conceding that at least by February 2004 he was Allcare's de-facto lead counsel. Hill is listed as counsel on every filing that advanced Allcare's allegations relating to claims 52 and 102, including Allcare's original answer that asserted infringement of claim 52 (doc. #22), Allcare's amended answer that asserted infringement of claim 102 (doc. #124), and the summary-judgment briefing (docs. #143). Each of the attorneys who actually signed these filings have provided declarations showing that they regarded Hill as lead counsel and deferred to Hill on the pre-filing investigation and subsequent substantive issues. (Cleveland Declaration, doc. #587 at 11-12 (describing his role in this case as functionally that of local counsel, and that he did not substantively revise documents that were passed on to him for signing and filing); Medlock Declaration, doc. #617-2, at 7-17 (describing Hill's involvement in this case and Medlock's reliance on Hill's efforts). And when the issue of of Allcare's pre-filing investigation was raised by Highmark in the exceptional-case motion, it was Hill who responded on Allcare's behalf detailing his pre-filing efforts both as to claim 52 and 102. Consequently, the Court concludes that Hill sufficiently advocated Allcare's allegations as to claims 52 and 102 to be held accountable for them.

As for the merit of those allegations, prior to concluding that Allcare's counsel should be

sanctioned for continuing to pursue the infringement claims, the Court discussed the report and deposition of Allcare's expert, Dr. Holland. As construed by the special master, the 102 claim limits itself to a system including an "integrated interconnection and interaction of the patient, healthcare provider, bank or other financial institution, insurance company, utilization reviewer/case manager and employer." (Cl. Constr. Rep., doc. #367, at 20-21.) The Court concluded that in his August 2007 deposition Holland conceded that Highmark's system did not provide for this sort of interconnection and interaction. (ECF Mot App. at 293-94.) More specifically, Holland testified that in Highmark's system the patient does not appear to interact with the financial institution and the employee does not appear to interact with the employer. (*Id.*) The Court adopted the special master's report on claim construction in March 2007. Thus, based on the arguments and record existing at the time of the Opinion and Order, it appeared that after Holland's deposition it was clear that the preamble to claim 102 was a claim limitation and that Highmark's accused system did not satisfy such limitation. Allcare, however, maintained its allegation that Highmark's system infringed claim 102 until February 6, 2008.

In response to the exceptional-case motion, Hill explained that a diagram in Holland's report showed that Holland was of the opinion that the employee could interact with the employer in Highmark's system. (ECF. Resp. App. at 155 (citing (ECF Resp. App. at 81).) But the cited portion of Holland's report is simply a diagram of Highmark's systems showing the "portals" that connect each component.

(*Id.* at 81.) There is no discussion of whether these portals allow for the interaction contemplated by claim 102. And this does nothing to address the issue of interaction between the patient and the financial institution.

Hill also insisted that Holland did not concede in his deposition that the allegations regarding claim 102 are without merit, as argued by Highmark. Hill points out that Holland was never asked whether, in order to be found to infringe claim 102, Highmark's system must provide for interaction between the employee and employer and between the bank and the patient. But Hill has not explained why these elements would not be essential. Again, claim 102, by its terms and as construed, requires interconnection *and* interaction between various system users, including those about which Highmark questioned Holland during his deposition.

The similarities between the language of claims 52 and 102 might be argued as a basis for maintaining the allegations based on claim 102. That is, to the extent that Allcare was justified in maintaining its allegations as to claim 52, because of the claims' similar language, Allcare was justified in continuing with its allegations as to claim 102 as well. But, again, claims 52 and 102 are different claims with similar, even overlapping, but nevertheless different terms. Once this case had progressed to the entry of an order on claim construction and to Holland's issuance of an expert report, general similarities in the claims' terms was no longer a sufficient basis for maintaining infringement allegations as to claim 102.

The Court also adopted the special master's construction of claim 52. Claim element 52(c)

provides, in relevant part, for entering "data symbolic of patient symptoms for tentatively identifying a proposed mode of treatment and, when said proposed mode of treatment includes one of said predetermined procedures requiring utilization review, producing indicia thereof." Construction and application of this element has proven critical to this case. Highmark argued that the element covers a diagnostic smart system. Highmark further argued that its system is not a diagnostic smart system. Allcare took the contrary position, arguing that claim element 52(c) covered more than just a diagnostic smart system and that, regardless, Highmark's system was a form of a diagnostic smart system.

Element 52(c) was construed to cover a system into which is entered "information expressed in a symbolic or representative manner pertaining to a noticeable change in a patient's condition indicative of some bodily or mental disease, disorder or other medical condition for tentatively identifying a suggested method of the management and care of a patient to combat disease or injury." The parties stipulated, and the special master agreed, that "for," as used in element 52(c), is "used to indicate the aim, or purpose of an action or activity." Thus, under element 52(c), the aim or purpose of the entry of symptom codes into the patented system is the tentative identification of a proposed method of treatment. Or, as the special master explained in his infringement analysis, "the physician enters the patient's symptoms and the computer system identifies the most likely medical conditions corresponding to the entered symptoms together with the generally approved treatment." (Infringement Rep., doc. #484, at 11.)

Highmark's system uses ICD9, just as does the system embodied by claim 52. But in Highmark's system, rather than enter the ICD9 code for the system to propose a method treatment, the health-care provider enters ICD9 to reflect the patient's symptoms and, separately, enters CPT code to reflect the proposed treatment. It is the health-care provider, not the system, that proposes the treatment under Highmark's system. Holland's June 2007 report seemed to concede this distinction between the system embodied by claim 52 and Highmark's system. As the special master explained:

> Accepting, for purposes of this summary judgment motion, Dr. Holland's testimony that ICD9 codes are sometimes used as data symbolic of patient symptoms, in the accused system the physician enters data symbolic of patient symptoms (ICD9 code), and enters data tentatively identifying a proposed mode of treatment (CPT Code). The ICD9 code is not entered for identifying a proposed treatment as claimed. The ICD9 codes indicate the 'condition for which the patient is receiving treatment.' [Citing Holland's report] at ¶ 457. They do not *identify* the treatment.

(Infringement Rep. at 14.) Holland further acknowledged in his report that utilization review in Highmark's system is done by the system's considering the "procedure" or treatment code. (*Id.* at 13-14.) Again, this code is entered separately from the ICD9 symptom code after the proposed treatment is determined by the healthcare provider, which differs from the system covered by claim 52 in

which a symptom code is entered "for [the system to] tentatively identify[] a proposed mode of treatment." (*Id.*)

Additionally, the Court noted that Allcare had explained some of what the Court perceived to be a deficiency in its pre-filing investigation and its continued pursuit of allegations against claims 52 and 102 by asserting that Highmark had refused to give Allcare's experts access to Highmark's system. When Highmark made its system available in April 2004, Allcare did not send an expert to perform an inspection. Highmark argued in its exceptional-case motion that had an expert performed an inspection Allcare would have realized its claim were unsupported.

The inspection issues and Holland's report and deposition notwithstanding, Allcare persisted in its allegations as to claims 52 and 102, with summary judgment being entered in Highmark's favor on claim 52 based largely on Holland's report. Allcare did not respond to Highmark's summary-judgment arguments relating to infringement of claim 102 and eventually withdrew its allegations.

Hill explains that Highmark made its system available for inspection in April 2004 only in response to an order granting a motion to compel by Allcare. Hill insists that the order caught him on short notice, and that he was unable to arrange for Holland or any other expert to be present during the inspection. To compensate, Allcare had the system inspection transcribed and videotaped for later review by Holland. And Hill further explains that to criticize him and Allcare for continuing to pursue the allegations of infringement after the April 2004

inspection does not adequately take into consideration that: (1) at that point no claim construction had been entered in this case; (2) that a construction favorable to Allcare had been entered in *Trigon*; (3) that, in Allcare's opinion, the inspection of Highmark's system supported its allegations; and (4) that other companies with systems similar to Highmark's had just purchased licenses to the '105 patent.

Additionally, Hill insists that Holland's report did support Allcare's allegation that claim 52 had been infringed. Hill points out that Holland opined in his report that symptom codes are entered into Highmark's system for proposing a mode of treatment. According to Holland, in Highmark's system utilization review is begun with an authorization form. (ECF Resp. App. at 87.) It is this form where the ICD9 symptom codes are entered and, once the form is complete, it is submitted for utilization review. (*Id.*) The completed form, Holland insists, is the proposed mode of treatment and, thus, the symptom code entered into the form is entered "for tentatively identifying a proposed mode of treatment" as required by claim 52. (*Id.*)

This is quite a thin reed on which to base Allcare's claims. This theory was rejected, rather soundly, by both the special master and the Federal Circuit. The special master noted Allcare's argument that the entire authorization code is the proposed treatment, and explained that in completing the form the health care provider selects and enters CPT code into the authorization form and that it is the CPT code, not the form as a whole, that identifies the proposed procedure. (Infringement Rep. at 14.) In support of

his recommendation that summary judgment be entered in favor of Highmark, the special master cites the portion of Holland's report cited above, in which Holland characterizes Highmark's utilization review as being based on consideration of "procedure codes," rather than the authorization form as a whole. (*Id.*) Hill offers no other theory on which Allcare could have reasonably maintained its allegations as to claim 52.

And as the Court explained in the Opinion and Order, this is not the sort of run-of-the-mill case in which a party advanced claims and theories with which the Court ultimately disagreed. In response to Highmark's exceptional-case motion, Allcare explained that it waited to withdraw its infringement allegation of claim 102 until after deposing Highmark's expert, Jeremy Nobel, at which point Allcare concluded "that narrowing the issues for trial to infringement of claims 52 and 53 did not present an undue risk to Allcare of a patent invalidity finding." (ECF Resp. Br. at 16-17.) But nowhere—not in the response to the exceptional-case motion, in Hill's motion to reconsider, or in Hill's response to the show-cause order—does Hill or Allcare explain how maintaining allegations that claim 102 had been infringed protected Allcare from a finding that the '105 patent was invalid. Rather, as the Court concluded in the Opinion and Order, the circumstances suggest that the allegations as to claim 102 were maintained as leverage. And in any event, they were maintained to a point that Highmark was forced to pay an expert to provide an opinion as to whether its system infringed claim 102 and to address Allcare's allegations based on claim 102 its motion for summary judgment.

Hill refers to the arguments made by Allcare's other attorneys in his response to the show-cause order. Mike McKool Jr., Christopher Harrington, Luke McLeroy, and R. Darryl Burke, and their firm, McKool Smith, LLP ("the McKool Smith attorneys"), argue that maintaining the allegation of infringement as to claim 52 was not objectively unreasonable, even after Holland's report, because Allcare had argued that element 52(c) also covered a "utilization review system," a system for the "review of the medical necessity or the efficiency or the quality of health care services, either prospectively, concurrently, or retrospectively." This argument is similar to, but more elaborate than, that offered by Hill.

Element 52(c), after disclosing the entry of symptom data and identification of proposed treatment, addresses utilization review and the patented system's "producing indicia thereof." That is, if the proposed mode of treatment is one that requires utilization review, the system will "cause[] to exist a sign, indication, or identifying mark indicating that utilization review is required." (Cl. Constr. Rep. at 39.) As noted in the Opinion and Order, by the time of the report on claim construction, the parties agreed that element 52(c) covered at least a diagnostic smart system. (Infringement Rep. at 11.) The special master refused in his report, however, to state whether the element covered only such a system or covered a utilization-review system as well, because to do so would have been to improperly perform an infringement analysis at the claim-construction stage.

Ultimately, the special master concluded that although claim 52 covered a utilization-review system, Highmark's system did not infringe the '105 patent. In the system disclosed by element 52(c), symptom data is entered for the purpose of the system's proposing a method of treatment *and*, if necessary, the system indicates that utilization review is required. In the Highmark system, the health care provider enters one code to reflect the patient's symptoms and, separately, enters a code to reflect the proposed treatment. Highmark's system then determines whether utilization review is necessary by comparing the proposed treatment to a list of treatments stored in a database. Thus, in the Highmark system, symptom codes are not entered "for" the system to propose a mode of treatment, as in the system disclosed by element 52(c). And Highmark's system, unlike the disclosed system, performs utilization review based on the proposed treatment codes entered by the health care provider.

The diagnostic smart system is a specific embodiment disclosed in the '105 patent. And it is true, as argued by the McKool Smith attorneys, that the mere fact that a claim covers a specific embodiment does not mean that the claim cannot cover other ways of practicing the invention. *See Home Diagnostics, Inc. v. LifeScan, Inc.*, 381 F.3d 1352, 1357 (Fed. Cir. 2004). But although true in the abstract, the McKool Smith attorneys do not meaningfully explain how this principle applies in this case. They argue that the fact that element 52(c) was construed in such a way as to cover at least a diagnostic smart system did not foreclose the element from covering other systems. But the McKool Smith attorneys do not explain how it was

reasonable to believe that element 52(c) could actually cover other systems under the facts of this case. As the special master acknowledged in his report on infringement, it is improper to limit a claim to a specific embodiment. *See Phillips v. AWH Corp.*, 415 F.3d 1303, 1323 (Fed. Cir. 2005). Yet a claim's terms are not construed in isolation, as a claim is "part of a fully integrated instrument consisting principally of a specification," which often describes specific embodiments. *Id.* at 1315. "[T]he specification 'is always highly relevant to the claim construction analysis. Usually, it is dispositive; it is the single best guide to the meaning of a disputed term.'" *Id.* (quoting *Vitronics*, 90 F.3d at 1582). "The specification is . . . the primary basis for construing the claims." *Id.* (quoting *Standard Oil Co. v. Am. Cyanamid Co.*, 774 F.2d 448, 452 (Fed. Cir. 1985)). In this case, element 52(c) covers a system in which "data symbolic of patient symptoms" is entered "for tentatively identifying a proposed mode of treatment" and the specification discloses an embodiment in which the central processing system determines the recommended treatment using the symptoms codes. (Infringement Rep. at 11.) The special master observed that while it would be improper to simply limit claim 52 to this specific embodiment, the claim's use of the word "for" must be understood in this context. Doing so makes it clear that "for," as used in element 52(c), indicates a cause-and-effect relationship; that the proposed treatment is determined by the patented system using the entered symptom data. And again, in his report Holland recognized that in Highmark's system the health-care provider entered ICD9 code to record

symptoms and separately enters CPT code to reflect the proposed mode of treatment.

The McKool Smith attorneys argue that the fact that Allcare stipulated to the meaning of "for" as used in the claim element shows that Allcare and its attorneys believed Allcare had reasonable arguments on this claim. But the fact that Allcare and its attorneys agreed early on to a meaning of "for" that, in the context of the patent, established that a computer operated by the patented system would determine the proposed treatment only strengthens the conclusions in the Opinion and Order.

f. Summary as to Hill and Hill, Kertscher, & Wharton, LLP

To summarize, Hill has led Allcare's efforts to prosecute the '105 patent, both generally and against Highmark in particular. While this case was pending before the Western District of Pennsylvania, Hill participated in a motion to dismiss that contained what are at least misleading statements about Allcare's role in the Seaport Survey. Hill may have had no subjective knowledge of these statements, but as the attorney leading Allcare's prosecution of the '105 patent and as an attorney listed on the motion, it was Hill's duty to review the motion and its supporting evidence to ensure the motion was based on reasonable assertions of law and fact.

Even so, if any court were to issue sanctions based on the motion, it would be most appropriate for the Western District of Pennsylvania to do so. It was that court in which the misleading motion was filed. In any event, the Western District of Pennsylvania apparently did not give the representations about

Allcare's involvement in the Seaport Survey much weight as, rather than dismissing the case, it transferred the case here.

Moreover, "sanctions must be imposed within a time frame that has a nexus to the behavior sought to be deterred." *Thomas v. Capital Sec. Servs.*, 836 F.2d 866, 881 (5th Cir. 1988). Over five years passed between the filing of the motion to dismiss and Highmark's filing of the exceptional-case motion, which brought Shelton's statements to the Court's attention. Another year and a half passed before the Court imposed sanctions based in part on the motion to dismiss.

Similarly, Hill's role in Allcare's shifting claim construction does not support sanctions. Hill's explanation that Allcare's alterations of its claim construction, contrary to the scheduling order and without Highmark's agreement, is typical of a patent case is wholly unsatisfactory. Nevertheless, the documents relevant to the shifting claim construction were filed or disclosed between July 2004 and November 2006, years before Highmark's motion or the Opinion and Order.

Hill's role in Allcare's assertion of the defenses of res judicata and collateral estoppel based on Highmark's role in *Trigon* does not support sanctions either. Hill's response to the show-cause order explains that *Trigon* and Allcare's efforts against Highmark shared key issues, such as construction of the '105 patent, and that he personally observed Highmark's counsel attend the summary-judgment hearing in *Trigon* and appear to advise *Trigon's* counsel during the hearing. The doctrine of virtual representation is equity-based and nebulous, as

demonstrated by the case law cited by Hill. And, Shelton's letter disavowing any use of preclusion-based defenses aside, the doctrine was at least arguably satisfied by the facts of which Hill was aware.

Hill has not satisfactorily explained the other bases for sanctions discussed in the Opinion and Order. As for the pre-filing investigation, however, Hill has addressed at least some of the deficiencies discussed in the Opinion and Order. For example, the Court's conclusion that Hill's pre-filing investigation was inadequate was based in part on the lack of documentary evidence showing such an investigation occurred, while post-filing efforts, such as the annotation of the *Trigon* charts or the retention of experts, were documented. Hill has now provided documentary evidence supporting his pre-filing investigation in the form of the comparison of the responses to the Seaport Survey by Trigon and Highmark. These items show that Hill had information supporting his understanding of Highmark's system prior to filing. Relatedly, the Court faulted Hill for relying on his pre-filing efforts in *Trigon* and the *Trigon* summary-judgment rulings in *Trigon* to justify Allcare's case against Highmark. The comparison of the survey responses shows that Hill and Allcare had a basis for believing that pre-filing efforts in *Trigon* were relevant to the case against Highmark, and that the summary-judgment rulings, which addressed among other things the construction of the '105 patent, were relevant to the case against Highmark as well. Hill has also offered a reasonable explanation for why an expert was not taken to inspect Highmark's system in April 2004.

But Hill continues to provide essentially a "trust me" assurance that he relied on relevant evidence and performed a good-faith analysis before concluding that Allcare's claims were supportable. Hill's evidence is particularly conclusory with regard to his efforts as of April 2002, when Allcare first contacted Highmark about licensing the '105 patent. Because the Court addressed the privilege issue in the Opinion and Order, attorney-client privilege is no longer an excuse for Hill's not providing a more detailed accounting of his pre-filing efforts so the Court could verify that Hill, in fact, performed the necessary analysis.

And as for Allcare's maintenance of its allegations of infringement, claim 52 was construed to cover only a diagnostic smart system, a system that proposes a mode of treatment in response to the entry of a symptom code. This construction was a product not only of the specific embodiment of a diagnostic smart system in the '105 patent, but of the parties' agreed claim construction. And regardless of whether it was foreseeable that claim 52 would be limited to a diagnostic smart system, it was clear that it was so limited for the purposes of this litigation after the Court adopted the special master's recommendation on claim construction. Holland recognized that, in Highmark's system, the proposed mode of treatment is entered separately, as opposed to being generated by the system. Holland further recognized that utilization review in Highmark's system is performed based on the separately-entered treatment code. This contradicts the theory advanced by Holland and Hill that allegedly justified Allcare's continued prosecution of claim 52, which is that the

authorization form as a whole is the proposed mode of treatment.

Hill defends Allcare's continued prosecution of claim 102 based on similarities between its language and that of claim 52. But, again, whatever their similarities, they are separate claims with separate terms and those terms result in each claim's having a different scope. Hill also argues that, rather than conceding that Highmark's system did not allow for the sort of interaction of system users required by claim 102, as argued by Highmark, Holland's report and deposition supported prosecution of claim 102. But by its terms and as construed, claim 102 covers a system that generally requires interaction of system users. Holland seemed to recognize in his deposition that certain users do not interact in Highmark's system, and even Allcare itself apparently recognized that its allegations under claim 102 could not be supported as it ultimately withdrew them.

Finally, this was not simply a case in which a party made arguments that were ultimately rejected by the Court. Allcare's response to the exceptional-case motion and Hill's declaration statements show that Allcare maintained allegations based not on their merit, but as leverage against Highmark's claims.

Yet there are at least some portions of the record before the Court that support the filing and maintenance of Allcare's infringement allegations. Hill's declarations describe his pre-filing investigation after April 2002 as incorporating new information gathered through research he and Shelton performed and through his conversations with Highmark and its counsel. This, combined with the evidence of the Seaport Survey and Hill's

comparison of Trigon and Highmark's responses to the survey and the summary-judgment rulings in *Trigon* arguably support Allcare's prosecution of at least claim 52.

With the *Trigon* rulings, Allcare secured a construction of claim 52 that was not limited to a diagnostic smart system, which supported one of its theories of infringement in this case. To the extent that this Court entered a claim construction that differed from that in *Trigon*, Allcare might have argued that its maintenance of the claim-52 allegations were an effort to obtain a final judgment so that the construction could be appealed. *See Regents of the Univ. of Cal. v. DakoCytomation Cal., Inc.*, 517 F.3d 1364, 1371 (Fed. Cir. 2008) (noting that the Federal Circuit generally does not certify the issue of claim construction for interlocutory appeal). And with the Seaport Survey, Allcare obtained from Highmark some evidence that, even if claim 52 covers only a diagnostic smart system, Highmark's system infringed. The responses by Highmark submitted by Hill indicated that its system has some capacity to suggest a proposed treatment. Perplexingly, Hill does not make any of these arguments or point to any of this evidence in defending his role in filing or maintaining Allcare's allegations of infringement.

Even this leaves the filing and maintenance of allegations related to claim 102 unsupported. The Seaport Survey and Hill's comparison of the survey responses predate the amendment adding the counterclaim based on claim 102. But by the time of the amendment, Holland had issued his report and had been deposed and had apparently recognized

that users of Highmark's system could not interact as contemplated by claim 102. Moreover, unlike the other bases for sanctions discussed in the Opinion and Order, such as the shifting claim construction, sanctions based on the filing and maintenance of infringement allegations would be based on pleadings. *See Thomas*, 836 F.2d at 881. Sanctions must generally bear a temporal nexus to the conduct to be sanctioned, but sanctions based on pleadings may, under some circumstances, be imposed at the end of the suit. *See id.* All of this is to say, the sanctions issue against Hill is a very close call and despite the foregoing considerations weighing against sanctions they may nevertheless be appropriate. But because there is some consideration weighing against sanctioning Hill for almost all of the conduct discussed in the Opinion and Order, the Court will err on the side of caution given the potentially harsh side-effects upon reputation, client retention, and livelihood that court-imposed sanctions can have and vacate the imposition of sanctions against Hill.[5]

---

[5] This conclusion has no bearing on the Court's exceptional-case finding against Allcare. Allcare was free to present any evidence it saw fit to defend against Highmark's arguments under section 285, and it chose not to submit documents such as the August 2002 letter with the comparison of the responses by Trigon and Highmark to the Seaport Survey and chose to rely on a declaration by Hill that lacked sufficient detail for the Court to verify compliance with section 285 and Rule 11. As explained in the order granting reconsideration and to show-cause, Hill and the other attorneys initially sanctioned were allowed to present additional argument and evidence to ensure compliance with Rule 11's procedure, not to give Allcare a second chance to defend its actions.

2. Joseph Cleveland and Brackett & Ellis, PC

In the Opinion and Order, the Court concluded sanctions against Joseph Cleveland and his firm, Brackett & Ellis, PC, were warranted based on Cleveland's participation in the shifting claim construction and Allcare's continued pursuit of infringement allegations after Holland's report and deposition.

For the reasons discussed above, the shifting claim construction is not a proper basis for sanctions. And, also for the reasons discussed above, the Court has concluded that it will not impose sanctions based on the continued prosecution of the infringement allegations.

Cleveland argues that sanctions against him are inappropriate for the additional reason that, although designated lead counsel, he was functionally local counsel. Cleveland points out that this case was filed before the Court adopted its current ECF procedures, so he would receive copies of documents to be filed, distribute and serve copies as necessary, and, after some review, sign and file the documents. (Cleveland Decl., doc. #587, at 10.) Cleveland's review of documents focused on ensuring compliance with local rules and included a limited review of the substances of the filing, for which he relied on Allcare's "chief" counsel. (*Id.*) Cleveland states that Hill, along with Medlock, presented their evaluation of the merits of Allcare's case against Highmark. And the record as a whole bears out that Hill was Allcare's chief counsel, and it was Hill that made substantive decisions in Allcare's prosecution of the '105 patent. (*Id.* at 3 (noting that Hill was

Allcare's lead counsel in *Trigon*); at 6 (discussing Hill's presentation of the merits of Allcare's case against Highmark).) An attorney may place "some reliance" on the investigation and factual information provided by an attorney that preceded him in the case. *Smith v. Our Lady of the Hospital Lake, Inc.*, 960 F.2d 439, 446 (5th Cir. 1992). Under Rule 11, notwithstanding reliance on another attorney's efforts, the signing attorney certifies the reasonableness of a filing and may be sanctioned if the filing does not have reasonable basis or is for an improper purpose. *See* Fed. R. Civ. P. 11(a), (b). But given the extent of Hill's leadership role in this case, the Court concludes that Cleveland's reliance on Hill should not expose Cleveland to sanctions. Accordingly, the Court will vacate the sanctions imposed on Cleveland.

3. V. Bryan Medlock and Sidley Austin, LLP

V. Bryan Medlock and his firm, Sidley Austin, LLP, were sanctioned in the Opinion and Order based on Medlock's signing Allcare's original answer, in which it alleged that claim 52 had been infringed and in which it asserted the defenses of res judicata and collateral estoppel. In his declaration in response to the show-cause order, Medlock provides an explanation similar to that of Hill to justify the assertion of the preclusion defenses. And just as did Cleveland, Medlock relied on Hill's pre-filing investigation and strategic decisions on substantive issues in filing Allcare's allegation that Highmark's system infringed claim 52. Medlock states that he was aware that Hill had been involved in Allcare's efforts to prosecute the '105 patent since early 2002,

and that Hill and Shelton presented to him their understanding of the merits of Allcare's case against Highmark in the April 2002 strategy session. Thereafter, Hill lead Allcare's efforts against Highmark, with Medlock acting only as a sounding board for his ideas.

The Court notes that Medlock has already filed a notice of appeal, and that he filed his motion for reconsideration after that notice. "Generally, a notice of appeal divests the district court of jurisdiction over the judgment or order that is the subject of the appeal." *Sierra Club, Lone Star Chapter v. Cedar Point Oil Co.*, 73 F.3d 546, 578 (5th Cir. 1996). But a district court may seek leave from the court of appeals to entertain a motion to reconsider, *Shepherd v. International Paper Co.*, 372 F.3d 326, 329 (5th Cir. 2004), and this Court hereby seeks such leave of the Federal Circuit. Once leave is sought, the appellant may file a motion to remand so that the district court may grant reconsideration. *See id.* In the event Medlock does so, and his case is remanded to this Court, the sanctions imposed on Medlock will be vacated.

4. The McKool Smith Attorneys

The McKool Smith attorneys were sanctioned in the Opinion and Order for assisting Allcare in continuing to pursue allegations of infringement after those allegations were shown to be unsupported. Aside from defending the merits of those allegations, similar to Cleveland and Medlock, the McKool Smith attorneys' chief argument is that they relied on Hill's investigation and analysis on the issue of infringement. According to the McKool Smith attorneys, their involvement in this case focused on

the issues of damages and trial strategy. Again, as with Medlock and Cleveland, given that the record shows that Hill made the strategic and substantive decisions regarding claim construction and infringement in Allcare's prosecution of the '105 patent, and that Hill made representations to the other attorneys regarding the merit of Allcare's claims against Highmark and his investigation into such claims, the McKool Smith attorneys should not be sanctioned for relying on Hill. Consequently, the sanctions against the McKool Smith attorneys will be vacated.

III. CONCLUSION

The issue of sanctions against Hill is a close one, as Hill has not addressed all of the circumstances that the Court concluded warrant sanctions in the Opinion and Order, and many of the explanations Hill has offered are less than satisfactory. Nevertheless, the Court has been presented with some consideration weighing against sanctioning Hill for almost all of the conduct discussed in the Opinion and Order. As for the other attorneys, in light of Hill's leadership role in this case and his representations to them regarding his investigation of Allcare's claims, they will not be sanctioned for relying upon Hill.

Accordingly, the sanctions imposed on Steven Hill and his firm, Hill, Kertscher, & Wharton, LLP; Joseph F. Cleveland and his firm, Bracket & Ellis; and Mike McKool Jr., Christopher Harrington, Luke McLeroy, and R. Darryl Burke and their firm, McKool Smith LLP are hereby VACATED. The clerk of Court is DIRECTED to refund the sanctions paid by these attorneys. In the event that the Federal

Circuit remands the issue of the sanctions imposed on V. Bryan Medlock and his firm, Sidley Austin, LLP, those sanctions will be vacated as well.

SIGNED August 9, 2010.

/s/
TERRY R. MEANS
UNITED STATES
DISTRICT JUDGE

APPENDIX E

IN THE UNITED STATES DISTRICT COURT
FOR THE NORTHERN DISTRICT OF TEXAS
FORT WORTH DIVISION

HIGHMARK, INC.,

v.

ALLCARE HEALTH MANAGEMENT SYSTEMS, INC.,

CIVIL NO. 4:03-CV-1384-Y

ORDER AWARDING ATTORNEYS' FEES

On April 1, 2010, this Court entered an Opinion and Order Granting Motion for Exceptional-Case Finding and Attorneys' Fees (doc. 566). In that order, the Court determined that the instant action is an exceptional case under 35 U.S.C. § 285 as a consequence of certain acts of defendant Allcare Health Management Systems, Inc. ("Allcare").[1] The Court also determined that there is no cause to exercise its discretion to deny the request for fees made by plaintiff Highmark, Inc. ("Highmark").[2]

---

[1] The Court's exceptional-case finding and related factual findings are set out in detail in the April 1 opinion and order.

[2] To be clear, in the April 1 opinion and order, the Court made a number of other determinations that either are not relevant here or have since been affected by subsequent orders (e.g.,

Accordingly, pursuant to Federal Rule of Civil Procedure 54(d)(2), the Court directed Highmark to submit a brief on the reasonableness of the attorney and expert fees it requests. The Court cautioned Highmark to request only those attorney and expert fees that it incurred as a result of the conduct of Allcare and its attorneys as discussed in that opinion and order ("exceptional conduct"). *See Takeda Chemical Industries, Ltd. v. Mylan Laboratories, Inc.*, 549 F.3d 1381, 1390 (Fed. Cir. 2008) (noting that fees for an entire suit are rarely awarded). Therefore, the only issue before the Court is the reasonableness of the amount of fees that Highmark seeks to recover.

I. REASONABLE ATTORNEYS' FEES

A. Highmark's Request

Highmark requests $4,846,710.02 in attorneys' fees and $209,626.56 in expenses.[3] Highmark indicates that its "requested fees encompass the entirety of work directed to the asserted patent-related claims and defenses because none would have been incurred if Allcare had acted reasonably before asserting infringement." (Pl.'s Br. 1 (doc. 603).) In other words, according to Highmark, it may request the entire amount of fees and expenses it incurred

---

Opinion and Order Reconsidering and Vacating Sanctions, doc. 633). For purposes of the instant order, the Court's exceptional-case finding and grant of Highmark's request for attorneys' fees are the important aspects of the April 1 opinion and order, and the subsequent orders do no effect the Court's exceptional-case finding. *See* Op. and Order Vac. Sanct. 47 n.5 (doc. 633).

[3] Highmark already received $88,998.58 in the Bill of Costs (doc. 511).

litigating the patent-related issues in this case[4] and, at the same time, comply with the Court's directive to request only those attorney and expert fees it incurred as a result of the Allcare's exceptional conduct.

Nevertheless, in Volume 3 of Highmark's confidential appendix (doc. 602), Highmark provides a chart that divides its fee request into time periods based on events in the litigation in an effort to demonstrate that its fee request, although comprehensive, is tailored to Allcare's exceptional conduct. (Conf'l App. to Pl.'s Br. 1283-85.) And in its brief, Highmark explains how the fees incurred during each time period are attributable to Allcare's improper conduct. (Pl.'s Br. 22-25.) For example, Highmark asserts that the work it performed in response to Allcare's cease-and-desist letter of April 16, 2002, was only necessary because of Allcare's failure to adequately investigate the merits of its infringement claims before threatening suit against Highmark. (*Id.* at 2-3, 23.) In addition, Highmark contends that the fees and expenses it incurred after filing suit in 2003 were the direct result of Allcare's blind reliance upon the Trigon system[5] in filing and

---

[4] Highmark does not request any fees for work performed after September 2009 when the Court determined that there was a substantial basis for an exceptional-case finding.

[5] The Trigon system was the subject of an infringement action that Allcare filed against Trigon Healthcare, Inc., in the United States District Court for the Eastern District of Virginia. The Eastern District granted summary judgment in favor of Allcare, concluding, among other things, that the '105 patent (which was at issue in this case) is enforceable. As the Court explains in more detail in the April 1 opinion and order, Allcare filed and maintained its infringement counterclaims against Highmark

maintaining its infringement counterclaims. (*Id.* at 23-24.) Moreover, Allcare attributes the fees it incurred after April 2004 to Allcare's failure to take an expert to inspect the Highmark system and to Allcare's maintenance of its infringement allegations even after this Court's adoption of the special master's claim construction in 2007. (*Id.* at 24.)

Highmark asserts that application of the hybrid lodestar analysis explained in *Maxwell v. Angel-Etts of Cal.*, 53 F. App'x 561 (Fed. Cir. 2002) supports the conclusion that Highmark's fee request is reasonable. "Under this approach, the [C]ourt first determines a lodestar figure by multiplying the number of hours reasonably spent on the litigation by a reasonable hourly rate." *Id.* at 568 (citing *Hensley v. Eckerhart*, 461 U.S. 424, 433-34 (1983)). The Court may then adjust the lodestar figure "based on a variety of factors, such as skill and time required, novelty of the questions involved, fixed or contingent fee basis, results obtained, and/or relationship between attorney and client." *Id.* (citing *Kerr v. Screen Extras Guild, Inc.*, 526 F.2d 67, 70 (9th Cir. 1975)). If it does so, however, the Court must articulate its reasons for the adjustment. *Id.* (citation omitted). "In cases where the fee application is complex, the district court is not required to do a line-by-line analysis, but may make across-the-board cuts, so long as it sets forth a concise reason for its cuts." *Id.* (citations omitted).

---

based on the Trigon system's alleged similarities to the Highmark system (although Allcare failed to, among other things, inspect the Highmark system prior to filing its counterclaims). (Op. and Order 2-5.)

Highmark indicates that some 16,019.67 hours were expended by attorneys working on its case and that an additional 2640.54 hours were expended by non-attorneys. Highmark's three-volume confidential appendix (docs. 600-602) contains detailed documentation of these hours in the way of invoices and billing statements. It appears that these hours date from May 2, 2002, after receiving Allcare's cease-and-desist letter, to September 30, 2009, after the Court determined that there was a substantial basis for an exceptional-case finding. Moreover, the appendix contains numerous redactions for hours that Highmark has excluded from its fee request. According to Highmark, these hours were either not sufficiently related to the patent claims or they were expended by attorneys with limited involvement in the case.

Furthermore, with the exception of two senior partners serving "discrete" roles in this litigation, Highmark explains that it had a special billing arrangement with the law firm Reed Smith LLP ("Reed Smith") "whereby all partners working on this case were billed at a single rate and all associates were billed at a single rate, each increasing slightly as the years progressed."[6] (Pl.'s Br. 13.) Highmark offers the 2003 and 2009 Reports of the Economic

---

[6] The fees that Reed Smith charged for Highmark's lead counsel, Cynthia Kernick, and partner Eugene LeDonne ranged from $290 per hour in 2002 to $380 per hour in 2009. Further, Reed Smith billed its associates at $190 per hour in 2002 and $265 in 2009. Reed Smith charged $500 per hour for senior partners Fred Colen and James Martin, both of whom served discrete roles in the case. And Highmark's local counsel, the Gardere Firm, charged rates ranging from $235 to $510 (this latter figure was charged by Craig Florence in the last year).

Survey of the American Intellectual Property Law Association ("AIPLA") as support for its assertion that its hourly rates are reasonable.[7] (App. to Pl.'s Br. 1290-94.) As Highmark notes, the Federal Circuit has previously upheld district courts' consideration of the AIPLA surveys. *See, e.g., View Eng'g, Inc. v. Robotic Vision Systems, Inc.*, 208 F.3d 981, 987 (Fed. Cir. 2000); *Mathis v. Spears*, 857 F.2d 749, 755-56 (Fed. Cir. 1988). Given the foregoing, the Court will consider the AIPLA surveys in its evaluation of Highmark's fee request.

B. Allcare's Challenges to Highmark's Request

Allcare challenges Highmark's fee request on number of grounds. Initially, Allcare contends that by requesting fees for the entirety of work spent on the asserted patent-related claims and defenses,

---

[7] According to the 2003 AIPLA survey, the median hourly rate charged in 2003 by partners practicing patent law with 15 to 19 years of experience was $325, while partners with 20 to 24 years of experience charged a median hourly rate of $348. (App. to Pl.'s Br. 1291.) Associates with 5 to 6 years of experience earned a median of $226 per hour and associates with 7 to 9 made a median of $250 per hour. (*Id.*) Based on the 2009 AIPLA survey, the median hourly rate for partners with 15 to 24 years of experience was $445 per hour, while the average hourly rate for such partners was $467 and the seventy-fifth percentile rate for them was $570. (*Id.* at 1293) The median hourly rate for partners practicing patent law in Texas was $450, the average was $472, and the seventy-fifth percentile amount was $590. (*Id.*) Full-time intellectual property lawyers at firms of more than 150 attorneys charged an average of $599 an hour and a median hourly rate of $598. (*Id.*) Moreover, the 2009 AIPLA survey indicates that the average litigation costs for patent-infringement lawsuits in Texas with more than $25,000,000 at risk was $6,120,000 and the median was $6,000,000.

Highmark has "blatantly disregarded this Court's order and implicitly seeks reconsideration of it." (Def.'s Resp. 1 (doc. 630).) Similarly, Allcare contends that Highmark's broad request does not permit Allcare to respond "point for point as to the reasonableness of Highmark's requested fees and the impact any alleged litigation misconduct by Highmark should have on that amount." (Def.'s Resp. 5.) In its brief, Highmark expressly acknowledges, however, the limitations that this Court imposed on its fee request. Moreover, as previously explained, Highmark has broken down its fee request into various periods and litigation events, explaining how each period corresponds to Allcare's objectionable conduct and providing documentation of its work. Admittedly, Highmark's fee request is expansive. Nevertheless, it is detailed enough to allow this Court to assess its merit and to allow Allcare to respond. Indeed, Allcare does respond to the reasonableness of Highmark's request, taking issue with several specific aspects of the fee request over the course of 1,907 pages. (Conf'l App. to Def.'s Resp. (doc. 631).) And likewise, Allcare manages to argue for limitations based on Highmark's conduct. (Def.'s Resp. 7-9 (asserting that the Court should reduce Highmark's fee award based on Highmark's failure to withdraw its non-infringement claim as to Claim 1).) Thus, the Court does not find persuasive Allcare's argument that Highmark blatantly disregarded the Court's April 1 order and opinion, nor does the Court find merit in Allcare's argument that the broad scope of Highmark's fee request precludes Allcare from being able to adequately respond.

Allcare next challenges Highmark's entitlement to fees for work performed in connection with Highmark's unenforceability and invalidity defenses. Allcare states that Highmark withdrew these defenses before judgment and that the Court did not discuss these defenses in the April 1 opinion and order. In reply, Highmark insists it should recover for time spent on its unenforceability and invalidity defenses because those defenses are "related" to its non-infringement claim, which Highmark asserted in response to Allcare's infringement allegations. Highmark is correct that it should be permitted to recover for the time it spent defending against Allcare's frivolous infringement allegations. However, Highmark is not entitled to recover for work done in connection with its unenforceability and invalidity defenses because these were not incurred as a direct result of Allcare's exceptional conduct as described in the April 1 opinion and order.

In addition, Allcare contends that Highmark should not be permitted to recover any fees for work performed in connection with discovery. To support this contention, Allcare quotes the portion of the April 1 opinion and order stating "that most of the remaining acts alleged by Highmark appear to be discovery disputes that are likely in a complex and hotly contested case." Def.'s Resp. 7. That comment, however, was in regards to particular discovery-related actions—not discovery-related actions in general. While Allcare is correct that Highmark should not recover for discovery-related work not incurred as a result of Allcare's exceptional conduct, Allcare's contention is too broad. Highmark should be allowed to recover fees for any discovery-related

work incurred as a result of Allcare's exceptional conduct.

Allcare also contests Highmark's request for fees incurred in connection with Claim 1.[8] Allcare asserts that "Highmark insisted for over four years that Claim 1 remain a topic of this litigation" despite learning in July 2004 that Allcare had eliminated its counterclaim for infringement as to Claim 1. (Def.'s Resp. 8.) Allcare further asserts that Highmark's refusal to withdraw Claim 1 required claim-construction analysis to occur with respect to that claim when it otherwise might have been avoided. In reply, Highmark states, that it "maintained Claim 1 in this case because it was the 'apparatus' reflection of the Claim 52 'method' and was the most cogently stated [c]laim." (Pl.'s Reply 6.) According to Highmark, the fact that the special master began its claim-construction analysis with Claim 1 is evidence that "maintaining Claim 1 in this action was appropriate." (Pl.'s Reply 6.) Highmark maintained Claim 1 in this action as part of its defense against all of Allcare's infringement allegations (e.g., Claim 502). Therefore, because Claim 1 was the predicate "system" claim for its other "method" claims, Highmark's maintenance of Claim 1 was a permissible part of its defense against Allcare's infringement allegations.

Allcare also contends that Highmark should not receive fees for work performed on its various *Trigon* motions. Highmark points out that Highmark filed multiple motions to strike reference to the *Trigon* rulings and that the Court denied each one. The

---

[8] Claim 1 was one of four claims originally at issue in this case, along with claims 52, 53, and 102.

issue, however, is not necessarily whether Highmark persuaded the Court as to each of its contentions but whether the fees Highmark incurred working on those contentions were "incurred as a result of the conduct of Allcare and its attorneys as discussed in [the April 1] opinion and order." As this Court explained in the April 1 opinion and order, Allcare misused the *Trigon* rulings throughout this litigation and even before. With respect to Allcare's inadequate pre-filing investigation, this Court made the following observations:

> "[t]he rulings in *Trigon* are relevant to the issue of whether Highmark's system infringed the '105 patent only to the extent that Highmark's system and the system in *Trigon* are the same. There is no indication in the record that Allcare investigated Highmark's system or compared it to Trigon's system before filing counterclaims against Highmark. Yet Allcare points to the *Trigon* rulings as justification for its claims of infringement against Highmark."

(Op. and Order 21.) The Court also noted that "once a claim construction was issued in this case, the issue became whether Highmark's system infringed the '105 patent as so construed," and "[t]he *Trigon* rulings became irrelevant." *Id.* at 38. The Court then concluded that Allcare's persistent reliance upon the *Trigon* rulings as support for Allcare's infringement allegations was not without knowing, or at least having reason to know, that the allegations were baseless. *See id.* at 38-39 (citing *Eltech Sys. Corp. v. PPG Indus., Inc.*, 903 F.2d 805, 810-811 (Fed. Cir. 1990)). Furthermore, after

concluding that Allcare had included in its original answer the defenses of *res judicata* and collateral estoppel despite knowing that they were meritless, the Court stated that "[t]he evidence of these actions firmly convinces the Court of Allcare's use of frivolous and vexatious tactics and supports an exceptional-case finding . . . ." *Id.* at 40. Therefore, the work Highmark performed as a result of Allcare's improper reliance on the *Trigon* rulings or the Trigon system was incurred because of Allcare's exceptional conduct, even if not every contention was successful.

Finally, in addition to challenging the reasonableness of Highmark's fee request, Allcare challenges Highmark's entitlement to fees at all. According to Allcare, Highmark "waited too long to pursue its claim that Allcare's infringement claims were frivolous" and has "not provided the Court with a record upon which it can rule." (Def.'s Resp. 11-12.) But as Highmark points out in its reply, section 285 only allows for the recovery of attorneys' fees in exceptional cases to the prevailing party, a status that cannot be determined until judgment. *See* 35 U.S.C.A. § 285. And with regard to Allcare's challenge to the record, the Court has reviewed Highmark's evidence and finds it both thorough and adequately organized. As previously explained, despite Allcare's assertion to the contrary, much of Highmark's appendix contains an adequate break-down of the fees it requests and an explanation of how those fees relate to Allcare's exceptional conduct. In any event, the Court has already determined that Highmark should recover attorneys' fees under § 285, and the sole issue before the Court is the reasonableness of those fees.

C. Determination of Reasonable Attorneys' Fees

"In determining the reasonableness of the award, there must be some evidence to support the reasonableness of, inter alia, the billing rate charged and the number of hours expended." *In re Electro-Mech. Indus.*, 359 F. App'x 160, 165 (Fed. Cir. 2009) (quoting *Lam, Inc. v. Johns-Manville Corp.*, 718 F.2d 1056, 1068 (Fed. Cir. 1983)). As previously discussed, Highmark submits the AIPLA surveys in support of its assertion that its requested hourly fees are reasonable. Given that Highmark's hourly rates fall within the ranges in the AIPLA surveys and in light of the fact that Allcare does not appear to challenge the reasonableness of Highmark's hourly rates, the Court concludes that the hourly rates submitted by Highmark's attorneys in this case are reasonable. *See View Eng'g, Inc.*, 208 F.3d at 987; *Mathis*, 857 F.2d at 755-56. Additionally, based on the invoices, billing statements, and charts contained in Highmark's three-volume appendix, the Court is satisfied that the hours Highmark's attorneys have purportedly expended in this litigation are substantiated by the evidence. Therefore, the Court will accept, as a starting place, the lodestar calculation proposed by Highmark. *Cf. Takeda*, 549 F.3d at 1390-91 (affirming the district court's award of $16,800,000 for attorney and expert fees and expenses).

However, an award by the court of the total amount of a fee request is unusual. *Takeda*, 549 F.3d at 1390 (citing *Beckman Instruments, Inc. v. LKB Produkter AB*, 892 F.2d 1547, 1553 (Fed. Cir. 1989)). And Highmark's fee request encompasses slightly more

than just the fees it incurred as a result of Allcare's exceptional conduct as discussed in the April 1 opinion and order. Highmark's argument—that it should recover the entirety of work directed to the asserted patent-related claims and defenses because it would have incurred none if Allcare had acted reasonably before asserting infringement—is persuasive given how intertwined Allcare's exceptional conduct is with each phase of this litigation. Nevertheless, the April 1 opinion and order notes specific instances of exceptional conduct on the part of Allcare, and those instances are all that Highmark's fee request should cover. Thus, the lodestar figure should be reduced accordingly. *See Maxwell*, 53 F. App'x at 568.

Accordingly, the Court concludes that two reductions are necessary. First, Highmark's fee request should be reduced by the time attributable to its invalidity and unenforceability defenses. The Court did not find exceptional Allcare's assertions that the '105 patent was valid and enforceable. Therefore, the time Allcare spent responding to these assertions are outside the scope of fees allowed by the April 1 opinion and order. Second, Highmark's fee request should be reduced to account for the discovery disputes that the Court found "likely [to occur] in a complex and hotly contested case." (Op. and Order 41.) While much of the discovery-related work that Highmark performed in this case appears to be the result of exceptional conduct on the part of Allcare, some of it is not.

Based on the evidence that Highmark has submitted, it appears that from May 2004 through September 2009, Highmark incurred approximately

$60,793 per month in fees. It also appears that around the beginning of this period, particularly in April and May 2004, Highmark performed a significant amount of discovery-related work (e.g., drafting opposition to motion to compel). (Conf'l App. to Pl.'s Br. 185-224.). Further, it is apparent that Highmark spent much of September and October 2007 working on its summary-judgment briefing, which included arguments concerning invalidity. (Conf'l App. to Pl.'s Br. 786-807.) In light of this information, a reduction of $91,189.52 seems fair and proportionate to the amount of work Highmark committed to mere discovery-related work during that time. The Court similarly concludes that an additional reduction of $60,793 is appropriate for the work Highmark spent working on its invalidity and unenforceability defenses.[9]

II. REASONABLE EXPERT FEES

In addition to attorneys' fees, Highmark seeks $378,650.05 in expert fees and expenses. As is evident in the April 1 opinion and order, the Court has already determined that Highmark should recover reasonable expert fees. However, as Highmark notes in its brief, "[s]ection 285 does not provide for the award[ing] of expert fees."[10] *In re*

---

[9] These figures are based on the Court's determination that about seventy-five percent of the work performed in the months of April and May 2004 were attributable to mere discovery disputes and that about half of the work it performed in September and October 2007 on its summary-judgment briefing is attributable to the invalidity defense. (Conf'l App. to Pl.'s Br. 185-224, 786-807.)

[10] In the April 1 opinion and order, the Court stated that there was no need to exercise its inherent authority to award fees and expenses in light of its conclusion that the instant action is an

Electro-Mech., 359 F. App'x at 165 (citing *Amsted Indus. Inc. v. Buckeye Steel Castings Co.*, 23 F.3d 374, 379 (Fed. Cir. 1994)). For the Court to award expert fees in excess of the statutory fees under 28 U.S.C. § 1821, [11] it must "invoke its inherent power to impose sanctions." *Takeda*, 549 F.3d at 1391 (citations omitted). Doing so requires either "a finding of fraud or abuse of the judicial process." *Amsted*, 23 F.3d at 378-79 (citations omitted). In other words, because "not every case qualifying as "exceptional" under section 285 will qualify for sanctions under the court's inherent power," the Court must "assess whether this case goes sufficiently beyond 'exceptional' within the meaning of section 285 to justify an award of expert fees as a sanction under the [C]ourt's inherent power." *Id.* (citations omitted).

The Court concludes that this standard is met in the present case. In the April 1 opinion and order, the Court concluded that Allcare had filed and continually pursued frivolous counterclaims even after it became clear that those counterclaims were meritless. (Op. and Order 28-36.) The Court also concluded that Allcare asserted defenses despite knowing they were meritless. (*Id.* at 39-40.) Moreover, the Court based its exceptional-case finding in part on Allcare's use of "vexatious tactics."

---

exceptional case under § 285 and that sanctions are appropriate under Rule 11. Since that opinion, however, the Court has vacated its imposition of Rule 11 sanctions. Therefore, in the instant order, the Court will invoke its inherent power to award expert fees, as § 285 does not provide for them.

[11] Highmark already obtained $200.00 in § 1821 witness fees in the Bill of Costs (doc. 511).

(*Id.* at 40.) Based on these findings, and pursuant to its inherent authority, the Court concludes that expert fees should be awarded in this case.

As with attorneys' fees, Highmark's expert-fee recovery must be limited to those fees incurred as a result of Allcare's exceptional conduct. After reviewing the evidence, it appears that the vast majority of Highmark's expert fees were incurred while defending against Allcare's allegations of infringement. However, expert Jeremy Noble appears to have done some work on invalidity-related defenses as well. (Confl App. to Pl.'s Br. 1279.) The fees attributable to this work are nominal in amount when compared to the overall request; but in an effort to remain consistent with the April 1 opinion and order and in fairness to Allcare, the Court concludes that a reduction of $3,250 is appropriate.[12]

III. POST-JUDGMENT INTEREST

Lastly, Highmark seeks post-judgment interest running from the date of "this Court's judgment awarding attorney fees." (Pl.'s Br. 22.) Under 28 U.S.C. § 1961(a), "[i]nterest shall be allowed on any money judgment in a civil case recovered in a district court." 28 U.S.C.A. § 1961(a). The phrase "any money judgment" in § 1961 includes a judgment that awards attorney fees. *Mathis*, 857 F.2d at 760. The purpose of this provision is to "deter[] use of the appellate process by the judgment debtor solely as a means of prolonging its free use of money owed the

---

[12] This figure is based on the 6.5 hours Nobel spent working on his invalidity report at an hourly rate of $500. (Confl App. to Pl.'s Br. 1279.)

judgment creditor." Thus, "[i]nterest on an attorney fee award . . . runs from the date of the judgment establishing the right to the award, not the date of the judgment establishing its quantum." *Id.* (citing *Copper Liquor, Inc. v. Adolph Coors Co.*, 701 F.2d 542, 544-45 (5th Cir. 1983); *Spain v. Mountanos*, 690 F.2d 742, 747-48 (9th Cir. 1982)). Therefore, because Highmark became entitled to attorneys' fees pursuant to the April 1 opinion and order,[13] post-judgment interest is appropriate and should accrue as of April 1, 2010, at a rate of .42%.[14]

V. CONCLUSION

Accordingly, Highmark shall recover attorneys's fees in the amount of $4,694,727.40 and $209,626.56 in expenses.[15] Highmark shall also recover expert fees and expenses in the amount of $375,400.05.

---

[13] Highmark received a judgment that conferred upon it "prevailing-party" status well before the April 1 opinion and order. However, because attorneys' fees under § 285 are within the discretion of the district court and are not automatic, that judgment is not the point at which Highmark became entitled to the fees or the point when post-judgment interest should begin to accrue. *See Mathis*, 857 F.2d at 760. In any event, Highmark has not requested that the post-judgment run from the earlier judgment. Thus, the judgment from which interest shall accrue is the April 1 opinion and order.

[14] Pursuant to 28 U.S.C. § 1961(a), this rate is "equal to the weekly average 1-year constant maturity Treasury yield . . . for the calendar week preceding." 28 U.S.C.A. § 1961(a).

[15] The breakdown is as follows:

> Reed Smith - $ 4,491,196.80 in attorneys' fees and $193,833.5 in expenses; Gardere Wynne - $203,530.60 in attorneys' fees and $15,793.06 in expenses; Mark Gleason - $253,671.25 in expert fees and $3,583.89 in expenses; and Jeremy Nobel - $108,625.00 in expert fees and $9,519,91 in expenses.

Interest shall accrue on these amounts, beginning April 1, 2010, at a rate of 0.42% pursuant to 28 U.S.C. § 1961.

SIGNED November 5, 2010.

/s/
TERRY R. MEANS
UNITED STATES
DISTRICT JUDGE

APPENDIX F

IN THE UNITED STATES DISTRICT COURT
FOR THE NORTHERN DISTRICT OF TEXAS
FORT WORTH DIVISION

HIGHMARK, INC.,

v.

ALLCARE HEALTH MANAGEMENT SYSTEMS, INC.,

CIVIL NO. 4:03-CV-1384-Y

ORDER DENYING MOTION TO ALTER OR AMEND THE JUDGMENT OR FOR A NEW TRIAL

Before the Court is the Motion to Alter or Amend Judgment or for a New Trial (doc. 643) filed by defendant Allcare Health Management Systems, Inc. ("Allcare"). By the motion, Allcare seeks reconsideration under Federal Rule of Civil Procedure 59(e) of the April 1, 2010, Opinion and Order Granting Motion for Exceptional-Case Finding and Attorneys' Fees (doc. 566) and the November 5, 2010, Order Awarding Attorneys' Fees (doc. 639). After review, the Court will deny the motion.

I. LEGAL STANDARD

A Rule 59(e) motion is one that "calls into question the correctness of a judgment." *In re Transtexas Gas Corp.*, 303 F.3d 571, 581 (5th Cir. 2002). "Rule 59(e)

serves the narrow purpose of allowing a party to correct manifest errors of law or fact or to present newly discovered evidence." *Templet v. HydroChem Inc.*, 367 F.3d 473, 479 (5th Cir. 2004) (quoting *Waltman v. Int'l Paper Co.*, 875 F.2d 468, 473 (5th Cir. 1989)). "Relief under Rule 59(e) is also appropriate when there has been an intervening change in the controlling law." *Schiller v. Physicians Res. Grp. Inc.*, 342 F.3d 563, 567 (5th Cir. 2003) (citation omitted). But "such a motion is not the proper vehicle for rehashing evidence, legal theories, or arguments that could have been offered or raised before the entry of judgment." *Templet*, 367 F.3d at 479 (citing *Simon v. United States*, 891 F.2d 1154, 1159 (5th Cir. 1990)).[1]

II. DISCUSSION

A. Arguments

Allcare contends that the Court should revisit its exceptional-case finding under 35 U.S.C. § 285 and its subsequent award of attorneys' fees because of "at least two material factors that have arisen since the [exceptional-case finding]." (Mot. Alter or Amend 1.) First, Allcare cites *Performance Pricing, Inc. v. Google, Inc.*, 704 F. Supp. 2d 577 (E.D. Tex. 2010), in which the Chief Judge of the United States Court of Appeals for the Federal Circuit sat by designation, as

---

[1] In this Court, Fifth Circuit law governs the standard for altering or amending a judgment under Rule 59(e), except to the extent that substantive issues of patent law are consulted. *See Bd. of Trustees of Leland Stanford Junior Univ. v. Roche Molecular Sys., Inc.*, 583 F.3d 832, 840 (Fed. Cir. 2009) ("The Federal Circuit defers to the law of the regional circuits on matters of procedural law that do not implicate issues of patent law." (citations omitted) (internal quotation marks omitted)).

a basis for reconsideration. Had that decision been available at the time of the exceptional-case finding, says Allcare, "a strong case law precedent would have reinforced Allcare's arguments for why this case does not rise to the high standard required for an 'exceptional case' finding and the award of attorneys' fees and costs." (Mot. Alter or Amend 3.) Second, Allcare asserts that the Court's August 9, 2010, Opinion and Order Reconsidering and Vacating Sanctions (doc. 633), by which the Court vacated Rule 11 sanctions against Allcare's counsel, "fatally undercuts" the Court's exceptional-case finding and subsequent decision to award fees pursuant to § 285. (Mot. Alter or Amend 3.) According to Allcare, the Court should "rectify this highly anomalous and inconsistent treatment of the inextricably intertwined conduct of Allcare and its lawyers." (Mot. Alter or Amend 17.) Allcare argues in the alternative that, if the Court is not prepared to set aside its exceptional-case finding based on the instant motion, then the Court should reconsider its decision denying Allcare's previous request for an evidentiary hearing on the issue (doc. 552).

Plaintiff Highmark, Inc. ("Highmark"), contends that Allcare has failed to meet its burden of showing that reconsideration of the exceptional-case finding and corresponding award of attorneys' fees is appropriate. Highmark asserts, among other things, that Allcare's motion is untimely, that the *Performance Pricing* case does not constitute "an intervening change in the controlling law," and that Allcare has pointed to no newly-discovered evidence. Highmark also asserts that reconsideration of the Court's decision to deny Allcare's request for an evidentiary hearing is, likewise, inappropriate.

B. Analysis

Initially, the Court notes that the instant motion is timely. An order that awards attorneys' fees under § 285 is not an appealable final judgment if it does not quantify the amount of the award. *See Special Devices, Inc. v. OEA, Inc.*, 269 F.3d 1340, 1343-1345 (Fed. Cri. 2001). Because Allcare filed its motion within twenty-eight days of the Court's November 5 order, which established the amount of the fee award, the motion complies with the time requirements of Rule 59(e). Fed. R. Civ. P. 59(e).

Nevertheless, after review of the briefing, the Court concludes that reconsideration of the exceptional-case finding and subsequent award of fees is not appropriate. First of all, there has been no intervening change in the controlling law. The significance of the *Performance Pricing* case, according to Allcare, is its clarification that a court must find subjective bad faith before making an exceptional-case finding. As Highmark points out, this was already the law at the time of the exceptional-case finding. *See, e.g., Wedgetail Ltd. v. Huddleston Deluxe, Inc.*, 576 F.3d 1302, 1305 (Fed. Cir. 2009). In any event, Allcare itself recognizes that *Performance Pricing* is not controlling on this Court and, instead, "should obviously be considered persuasive." (Mot. Alter or Amend 8.)

Furthermore, Allcare has not established the presence of any manifest errors of law or fact. Despite Allcare's insistence to the contrary, the Court did find the requisite subjective bad faith on the part of Allcare in determining that this was an exceptional case under § 285. For example, the Court determined the following:

> [t]he evidence establishes with a high probability that Allcare was not some naive or passive participant in this litigation. Rather, it pursued this suit as part of a bigger plan to identify companies potentially infringing the '105 patent under the guise of an informational survey, and then to force those companies to purchase a license of the '105 patent under threat of litigation.
>
> Allcare's vexatious and, at times, deceitful conduct did not stop there. Allcare maintained infringement claims well after such claims had been shown by its own experts to be without merit and did so as a tactic to provide leverage against Highmark's pending claims.

(Op. and Order Granting Mot. for Exceptional-Case Finding 49-50.) Nevertheless, Allcare insists that no bad-faith finding was made because "the words 'bad faith' and 'subjective bad faith' do not appear whatsoever in the [April 1 order]." (Mot. Alter or Amend 9.) But regardless of whether the Court used the magic words "subjective bad faith," the Court made itself quite clear that Allcare acted with the requisite culpability to support an exceptional-case finding under § 285. Allcare's argument on this point is either disingenuous or the result of a spotty review of the record.

Also unavailing is Allcare's contention that the August 9 order vacating Rule 11 sanctions against Allcare's former counsel "fatally undercuts" the exceptional-case finding and subsequent award of fees. "Motions under Rule 11 and § 285 are different." *Digeo, Inc. v. Audible, Inc.*, 505 F.3d 1362, 1368 (Fed. Cir. 2007) (footnote omitted). And Allcare's

statement that the requirements of § 285 are stricter than those imposed by Rule 11 is slightly oversimplified. While it is true that Rule 11 sanctions may be imposed for conduct falling short of the "subjective bad faith" necessary for an exceptional-case finding, it is also true that Rule 11 contains a number of procedural safeguards that § 285 does not. *See, e.g.*, *Digeo*, 505 F.3d at 1368 ("One key difference is that Rule 11 motions must comply with the safe harbor provision, but § 285 motions need not."). It was, in fact, Rule 11(c)(2)'s separate-motion requirement that caused the Court to reconsider its initial of imposition of Rule 11 sanctions in the first place (doc. 612). Moreover, the Rule 11 issue, though initially raised by Highmark, was ultimately pursued and resolved by the Court. (Order Granting Motions to Reconsider 4 (doc. 612).) The exceptional-case finding, on the other hand, was initiated and advanced by Highmark, and Allcare was given a full and fair opportunity to respond and present evidence in its defense. In short, the Court's decision to vacate Rule 11 sanctions against Allcare's counsel does not, by itself, render the exceptional-case finding a manifest error of law because the requirements under Rule 11 and § 285 are different.

Allcare, nonetheless, insists that the April 9 order vacating Rule 11 sanctions renders the exceptional-case finding an "unjustifiable anomaly." (Mot. Alter Amend 6.) Allcare contends that it was "fundamentally unfair" and "inconceivable" that the Court did not consider Allcare's proposed findings and conclusions (doc. 560). (Mot. Alter or Amend 9-10.) Allcare characterizes the Court's decision not to review Allcare's proposed findings as a "refusal by the Court to consider the whole record before it."

(Mot. Alter or Amend 9.) As the Court articulated in the April 1 order, however, Allcare's proposed findings were filed well after briefing on the exceptional-case issue had closed. In other words, it was Allcare's fault—not the Court's—that the proposed findings were not filed in time to make the record. Deadlines serve an important role in assuring the fairness of litigation, and the Court's decision to enforce them and disregard the untimely-filed proposed findings is not "exalt[ing] form over substance" as Allcare suggests. (Mot. Alter or Amend 10.) Allcare's refusal to take responsibility for its own actions only affirms the Court's determination that this is an exceptional case under § 285. Allcare's proposed findings do not constitute newly-discovered evidence, and the Court's decision to refrain from considering them is not a manifest error of law or fact.

III. CONCLUSION

Therefore, the Court concludes that Allcare has failed to demonstrate the appropriateness under Rule 59(e) of revisiting the exceptional-case issue—whether by altering or amending the judgment, granting a new trial, or holding an evidentiary hearing. Allcare has not pointed to any intervening change in the controlling law, any manifest errors of law or fact, or any newly discovered evidence. Accordingly, Allcare's motion to alter or amend or for new a trial is DENIED.

SIGNED January 18, 2011.

/s/
TERRY R. MEANS
UNITED STATES
DISTRICT JUDGE

APPENDIX G

UNITED STATES COURT OF APPEALS FOR THE FEDERAL CIRCUIT

HIGHMARK, INC.,

Plaintiff-Appellee,

v.

ALLCARE HEALTH MANAGEMENT SYSTEMS, INC.,

Defendant-Appellant.

2011-1219

Appeal from the United States District Court for the Northern District of Texas in case no. 03-CV-1384, Judge Terry Means.

ON PETITION FOR PANEL REHEARING
AND
ON PETITION FOR PANEL REHEARING AND REHEARING EN BANC

CYNTHIA E. KERNICK, Reed Smith LLP, of Pittsburgh, Pennsylvania, filed a combined petition for panel rehearing and rehearing en banc for plaintiff-appellee and a response to defendant-appellant's petition for panel rehearing. With her on the petition and response were JAMES C. MARTIN, KEVIN S. KATONA and THOMAS M. POHL.

DONALD R. DUNNER, Finnegan, Henderson, Farabow, Garrett & Dunner, LLP, of Washington, DC, filed a petition for panel rehearing for defendant-appellant and a response to plaintiff-appellee's combined petition for rehearing. With him on the petition and response was Erik R. Puknys, of Palo Alto, California. Of counsel on the petition and response was Dan S. Boyd, The Boyd Law Firm, P.C., of Dallas, Texas.

Before RADER, *Chief Judge*, NEWMAN, MAYER, LOURIE, BRYSON, LINN, DYK, PROST, MOORE, O'MALLEY, REYNA, and WALLACH, *Circuit Judges*.

PER CURIAM.

DYK, *Circuit Judge*, with whom NEWMAN, *Circuit Judge*, joins, concurs in the denial of the petition for rehearing en banc.

MOORE, *Circuit Judge*, with whom RADER, *Chief Judge*, O'MALLEY, REYNA, and WALLACH, *Circuit Judges*, join, dissents from the denial of the petition for rehearing en banc.

REYNA, *Circuit Judge*, with whom MOORE, O'MALLEY, and WALLACH, *Circuit Judges*, join, dissents from the denial of the petition for rehearing en banc. RADER, *Chief Judge*, joins in Parts I–II of the dissent.

ORDER

A petition for panel rehearing was filed by Defendant-Appellant Allcare Health Management Systems, Inc. ("Allcare"), and a response thereto was invited by the panel and filed by Plaintiff-Appellee Highmark, Inc. ("Highmark"). A combined petition for panel rehearing and rehearing en banc was also

filed by Highmark, and a response thereto was invited by the court and filed by Allcare.

The petitions for panel rehearing and responses were referred to the panel that heard the appeal, and thereafter the petition for rehearing en banc and the response were referred to the circuit judges who are authorized to request a poll of whether to rehear the appeal en banc.* A poll was requested, taken, and failed.

Upon consideration thereof,

IT IS ORDERED THAT:

(1) The petitions of Allcare and Highmark for panel rehearing are denied.

(2) The petition of Highmark for rehearing en banc is denied.

(3) The mandate of the court will issue on December 13, 2012.

FOR THE COURT

December 6, 2012
Date

/s/ Jan Horbaly
Jan Horbaly
Clerk

---

* Judge Mayer did not participate in the decision regarding rehearing en banc. Judge Linn assumed senior status November 1, 2012 after participating in the decision regarding rehearing en banc.

UNITED STATES COURT OF APPEALS
FOR THE FEDERAL CIRCUIT

HIGHMARK, INC.,

Plaintiff-Appellee,

v.

ALLCARE HEALTH MANAGEMENT SYSTEMS, INC.,

Defendant-Appellant.

2011-1219

Appeal from the United States District Court for the Northern District of Texas in case no. 03-CV-1384, Judge Terry Means.

DYK, *Circuit Judge*, with whom NEWMAN, *Circuit Judge*, joins, concurring in the denial of the petition for rehearing en banc.

We agree that rehearing en banc is properly denied. We write briefly to respond to the dissents.

I

Section 284, 35 U.S.C., allows the award of enhanced damages at the conclusion of a patent case based on a finding of willful infringement. *In re Seagate Tech., LLC*, 497 F.3d 1360, 1368 (Fed. Cir. 2007) (en banc); *see also Beatrice Foods Co. v. New England Printing & Lithographing Co.*, 923 F.2d 1576, 1578 (Fed. Cir. 1991) (collecting cases). Section 285, 35 U.S.C., allows the award of attorneys'

fees at the conclusion of the case, against either a patentee or an accused infringer, if the court finds the case "exceptional." Following the Supreme Court's decision in *Professional Real Estate Investors, Inc. v. Columbia Pictures Industries, Inc.* ("*PRE*"), 508 U.S. 49 (1993), we have long held that the standard for both inquiries is the same, and that it requires a dual determination that the position of the sanctioned party is (1) objectively unreasonable, and (2) asserted in subjective bad faith. *See, e.g., Old Reliable Wholesale, Inc. v. Cornell Corp.*, 635 F.3d 539, 543-44 (Fed. Cir. 2011); *iLOR, LLC v. Google, Inc.*, 631 F.3d 1372, 1377 (Fed. Cir. 2011); *Seagate*, 497 F.3d at 1370-71; *Brooks Furniture Mfg., Inc. v. Dutailier Int'l, Inc.*, 393 F.3d 1378, 1381 (Fed. Cir. 2005).

We all agree that the ultimate decision to award enhanced damages and attorneys' fees (once the predicate tests have been satisfied) is committed to the district court's discretion, and that the district court's findings on the bad faith component are subject to review for clear error. *See Highmark, Inc. v. Allcare Health Mgmt. Sys., Inc.*, 687 F.3d 1300, 1310 (Fed. Cir. 2012). The dissents also seem to agree that the objective reasonableness determination should be made by the court, not the jury. The question on which we divide is whether that determination should be subject to de novo review, as this court held in *Bard*, and as this panel (following *Bard*) held here. *See Bard Peripheral Vascular, Inc. v. W.L. Gore & Assocs., Inc.*, 682 F.3d 1003, 1005 (Fed. Cir. 2012).[1] In particular, the

---

[1] *Bard*'s clarification of *Seagate*'s objective prong was authorized by an en banc order granting rehearing "for the

question in this case is whether claim construction, which is a question of law in a merits determination, *see Cybor Corp. v. FAS Techs., Inc.*, 138 F.3d 1448, 1454-55 (Fed. Cir. 1998) (en banc), should nonetheless be treated as something else in an objective reasonableness determination.

That such legal questions invoke de novo review is clear. Our cases based the objective reasonableness standard directly on the Supreme Court's decision in *PRE*, 508 U.S. at 60-63. *PRE* held that litigation could not be sanctioned unless a suit was objectively baseless, and objective baselessness requires a probable cause determination. *Id.* at 62. *PRE* also held that "[w]here, as here, there is no dispute over the predicate facts of the underlying legal proceeding, a court may decide probable cause as a matter of law." *Id.* at 63. Under *PRE*, the reasonableness of a legal position in the context of a probable cause determination is itself a question of law, as the Supreme Court has recently confirmed. *See Scott v. Harris*, 550 U.S. 372, 381 n.8 (2007) (once the relevant facts are determined and inferences drawn "in favor of the nonmoving party *to the extent supportable by the record*, the reasonableness of Scott's actions . . . is a pure question of law"); *see also Stewart v. Sonneborn*, 98 U.S. 187, 194 (1878) ("[P]robable cause is a question of law in a very important sense . . . . Whether the circumstances alleged to show it probable are true, and existed, is a matter of fact; but whether, supposing them to be true, they amount to a probable cause, is a question

---

limited purpose of authorizing the panel to revise the portion of its opinion addressing wilifulness." En Banc Order No. 2010-1510 (Fed. Cir. June 14, 2012).

of law.") (internal quotation marks omitted). Judge Moore's suggestion that *PRE* did not decide what it explicitly decided is not well taken. And Judge Moore cites no authority for the proposition that under *PRE*, a determination of probable cause for legal arguments is not subject to de novo review.

II

Judge Moore, Judge Reyna, and Judge Mayer in his panel dissent, urge that both this decision and *Bard* are inconsistent with our prior authority. This is incorrect.[2] More fundamentally, they assert that the de novo standard is inconsistent with the Supreme Court's decisions in *Cooter & Gell v. Hartmarx Corp.*, 496 U.S. 384 (1990), and *Pierce v. Underwood*, 487 U.S. 552 (1988), which dealt with the standard of review for awards of attorneys' fees under Rule 11 and the Equal Access to Justice Act ("EAJA"). But those cases arose in quite different contexts, and are no basis for reading sections 284 and 285 as requiring deference to district courts on the objective reasonableness issue.

---

[2] None of our prior opinions involved a dispute between the litigants as to whether objective recklessness is a question of law to be reviewed de novo on appeal. Because this issue was never discussed, prior cases are not binding precedents on this point. *See Brecht v. Abrahamson*, 507 U.S. 619, 631 (1993) ("[S]ince we have never squarely addressed the issue, and have at most assumed the applicability of the . . . standard . . . we are free to address the issue on the merits."); *Nat'l Cable Television Ass'n v. Am. Cinema Editors, Inc.*, 937 F.2d 1572, 1581 (Fed. Cir. 1991) (opinions that appear to apply a standard, but "with little or no analysis," are "not precedent to be followed in a subsequent case in which the issue arises"); *see also Boeing N. Am., Inc. v. Roche*, 298 F.3d 1274, 1282 (Fed. Cir. 2002) (collecting cases).

First, the language of sections 284 and 285 does not mandate deference to the district court's discretion on questions of law. To the contrary, section 285 was amended to replace an open-ended discretionary standard, and to restrict the discretion in the district courts. Section 285, as originally enacted, provided that the district court "may in its discretion award reasonable attorney[s'] fees." Patent Act of Aug. 1, 1946, ch. 726, 60 Stat. 778. The 1952 Patent Act deleted the "in its discretion" language and replaced it with the "exceptional case" standard that exists today. 35 U.S.C. § 285 (2006) ("The court in exceptional cases may award reasonable attorney fees to the prevailing party."); *see also Rohm & Haas Co. v. Crystal Chem. Co.*, 736 F.2d 688, 691 (1984); Alan M. Ahart, *Attorneys' Fees: The Patent Experience*, 57 J. Pat. Off. Soc'y 608, 617 n.37 (1975).

Second, the relevant policy considerations behind sections 284 and 285 are quite different from those involved in EAJA and Rule 11. Those provisions are addressed to the award of attorneys' fees, not enhanced damages, as provided in section 284. Even as to the attorneys' fees provision of section 285, the considerations are different. Rule 11 deters abusive litigation practices, *Cooter & Gell*, 496 U.S. at 393, and EAJA discourages the government from initiating unjustified litigation by evening the playing field, "eliminat[ing] for the average person the financial disincentive to challenge unreasonable governmental actions." *Comm'r, INS v. Jean*, 496 U.S. 154, 163 (1990). In contrast, section 285, while it serves deterrent purposes, is a primarily compensatory provision. *See, e.g., Mathis v. Spears*, 857 F.2d 749, 753 (Fed. Cir. 1988) ("The purpose of Section 285 is to reimburse a party injured when

forced to undergo an 'exceptional' case." (emphasis omitted)). Early on, it was recognized that attorneys' fee awards were "not to be regarded as a penalty for failure to win a patent infringement suit," and should only be allowed where it would be "grossly unjust that the winner . . . be left to bear the burden of his own counsel fees." *Rohm & Haas*, 736 F.2d at 691 (quoting *Park-In Theatres, Inc. v. Perkins*, 190 F.2d 137, 142 (9th Cir. 1951)).

Third, unlike sanctions under Rule 11 or attorneys' fees under the EAJA, enhanced damages and exceptional case findings frequently involve extraordinarily large awards, often amounting to millions of dollars. [3] Highmark was awarded approximately $5 million in attorneys' fees and expenses in this case. *Highmark*, 687 F.3d at 1308. Bard was awarded $185,589,371.02 in enhanced damages and $19 million in attorneys' fees and costs. *Bard Peripheral Vascular, Inc. v. W.L. Gore & Assocs.*, 670 F.3d 1171, 1178 (Fed. Cir. 2012). The Supreme Court recognized in *Pierce* that large fee awards "militat[ed] against" an abuse of discretion

---

[3] For enhanced damages, *see, e.g.*, *Krippelz v. Ford Motor Co.*, 667 F.3d 1261, 1264–65 (Fed. Cir. 2012) ($21 million in enhanced damages); *i4i Ltd. P'ship v. Microsoft Corp.*, 598 F.3d 831, 858 (Fed. Cir. 2010) ($40 million in enhanced damages); *Muniauction, Inc. v. Thomson Corp.*, 532 F.3d 1318, 1323 (Fed. Cir. 2008) ($38,482,008.00 in enhanced damages).

For attorneys' fees, *see, e.g.*, *MarcTec, LLC v. Johnson & Johnson*, 664 F.3d 907, 910 (Fed. Cir. 2012) ($4,683,653.03 in attorneys' and experts' fees and expenses); *Lazare Kaplan Int'l, Inc. v. Photoscribe Techs., Inc.*, 628 F.3d 1359, 1366 (Fed. Cir. 2010) (over $6 million in attorneys' fees); *Takeda Chem. Indus., Ltd. v. Mylan Labs., Inc.*, 549 F.3d 1381, 1385 (Fed. Cir. 2008) ($16.8 million in attorneys' fees).

standard: "If this were the sort of decision that ordinarily has such substantial consequences, one might expect it to be reviewed more intensively." *Pierce*, 487 U.S. at 563. However, the Court concluded that this concern was unwarranted as applied to EAJA, because at the time EAJA fee awards were typically only a few thousand dollars. *Id.*; *see also Jean*, 496 U.S. at 164 n.12 ("In 1989 [EAJA] awards averaged less than $3,000 each").

Fourth, unlike the situation under Rule 11, the decision to award attorneys' fees and enhanced damages to prevailing parties under sections 284 and 285 is based on the entire case, and does not turn on whether the patentee's position would have been reasonable at the time of filing the complaint or pleading. *See Antonious v. Spalding & Evenflo Cos.*, 275 F.3d 1066, 1076 (Fed. Cir. 2002); Fed. R. Civ. P. 11 advisory committee's note, 1983. Rather, our en banc decision in *Seagate* established that objective reasonableness for enhanced damages is a single retrospective look at the merits of the case after the conclusion of the litigation, when there is a "prevailing party." *See, e.g.*, *Dominant Semiconductors Sdn. Bhd. v. OSRAM GmbH*, 524 F.3d 1254, 1264 (Fed. Cir. 2008) ("[O]bjective baselessness requires a determination based on the record ultimately made . . . not on the basis of information available to the patentee at the time the allegations were made."). The same is true of attorneys' fee awards under section 285 in the litigation of unmeritorious cases. Nor do sections 284 and 285, in these respects, implicate supervision of the local bar, a matter that *Cooter & Gell* found particularly within the expertise of the local district court. 496 U.S. at 404.

Fifth, appeals of enhanced damage awards and exceptional case findings typically come to this court either after an appeal that resolved the merits, or in an appeal that also involves review of the merits.[4] The district court, when it makes an objective reasonableness determination after a trial on the merits, is simply unable to forecast what this court will decide in the merits appeal. In this respect, it is not "uniquely positioned" to decide the objective reasonableness question. Moreover, the existence of appellate review on the merits before the objective reasonableness determination significantly mitigates the concern expressed in *Pierce* with "the investment of appellate energy" in de novo review. *Pierce*, 487 U.S. at 561; *see also Cooter & Gell*, 496 U.S. at 403-04. It will not require a significant "investment of appellate energy" for an appellate panel that has already addressed the merits to then determine if, under the correct law, a litigant was objectively unreasonable. Quite the contrary; the merits panel is typically better situated to make that determination than the district court, and remand for a district court's determination of objective reasonableness in light of the appellate merits determination would often be wasteful. The Federal Circuit brings to the table useful expertise. Our court sees far more patent cases than any district court, and is well positioned to recognize those

---

[4] *E.g.*, *Meyer Intellectual Props., Ltd. v. Bodum, Inc.*, 690 F.3d 1354 (Fed. Cir. 2012); *Bard*, 670 F.3d 1171; *i4i Ltd. P'ship v. Microsoft Corp.*, 598 F.3d 831 (Fed. Cir. 2010); *ICU Med., Inc. v. Alaris Med. Sys., Inc.*, 558 F.3d 1368 (Fed. Cir. 2009); *see also Highmark*, 687 F.3d 1300 (addressing damages after a prior merits appeal); *MarcTec, LLC v. Johnson & Johnson*, 664 F.3d 907, 910 (Fed. Cir. 2012) (same).

"exceptional" cases in which a litigant could not, under the law, have had a reasonable expectation of success.

III

Patent cases present complex legal issues. The interests of the parties, the legal system and the public are best served if both patentees and accused infringers are able to present reasonable legal positions without fear of sanctions. Unlike Rule 11, section 285 provides no safe harbor that allows a party to withdraw its case and thereby avoid the possibility of sanctions. De novo appellate review of the objective reasonableness defense assures uniformity in the treatment of patent litigation, insofar as reasonableness is the governing issue. At the same time, district courts will continue to play an important role in determining whether the subjective good faith prong of the applicable test has been satisfied and whether, if the legal predicates for a sanctions award have been satisfied, an award is desirable in a particular case.

MOORE, Circuit Judge, with whom RADER, Chief Judge, and O'MALLEY, REYNA, and WALLACH, Circuit Judges, join, dissenting from the denial of the petition for rehearing en banc.

Our court system has well-defined roles: the trial court makes factual findings and the appellate court reviews those findings with deference to the expertise of the trial court. An exceptional case determination under 35 U.S.C. § 285 has traditionally been one of the questions of fact determined by the trial court that is reviewable only for clear error. Contrary to our precedent, the

divided *Highmark* panel decided that a district court's exceptional case finding—based on its determination that the infringement claims asserted at trial were objectively baseless—is entitled to no deference and should be reviewed *de novo*. *Highmark, Inc. v. Allcare Health Mgmt. Sys., Inc.*, 687 F.3d 1300, 1309-10 (Fed. Cir. 2012). Because *Highmark* deviates from precedent, invades the province of the fact finder, and establishes a review standard for exceptional case findings in patent cases that is squarely at odds with the highly deferential review adopted by every regional circuit and the Supreme Court in other areas of law, I dissent from the denial of rehearing en banc.

I.

Attorney fees may be awarded to the prevailing party in "exceptional cases." 35 U.S.C. § 285. The exceptional nature of a case must be established by clear and convincing evidence. *Brooks Furniture Mfg., Inc. v. Dutailer Int'l, Inc.*, 393 F.3d 1378, 1382 (Fed. Cir. 2005). Absent misconduct in the litigation or in securing the patent, sanctions can be awarded "only if both (1) the litigation is brought in subjective bad faith, and (2) the litigation is objectively baseless." *Id.* at 1381.

Until *Highmark*, it was well established that the exceptional case determination, including objective baselessness, was a question of fact, subject to review only for clear error. *See, e.g., Cybor Corp. v. FAS Techs., Inc.*, 138 F.3d 1448, 1459 (Fed. Cir. 1998) (en banc) ("[T]he district court must determine whether a case is exceptional, a factual determination reviewed for clear error."); *Eon-Net LP. v. Flagstar Bancorp.*, 653 F.3d 1314, 1323, 1326 (Fed. Cir. 2011)

("[We] review the court's exceptional case finding for clear error. . . . [T]he district court did not clearly err in finding that Eon-Net pursued objectively baseless infringement claims."); *ICU Med., Inc. v. Alaris Med. Sys., Inc.*, 558 F.3d 1368, 1380 (Fed. Cir. 2009) (affirming the district court's exceptional case finding because it did not clearly err by finding that certain claims were objectively baseless); *Evident Corp. v. Church & Dwight Co., Inc.*, 399 F.3d 1310, 1315 (Fed. Cir. 2005) ("Whether a case is exceptional depends on findings of fact best left to the trial court, which we consequently review for clear error."). The *Highmark* majority is not free to disregard binding precedent on this point—the objectively baseless inquiry is a question of fact—and we should give the district court deference on appeal.

The *Highmark* decision relied, as did the *Bard* decision,[1] on *Professional Real Estate Investors, Inc. v.*

---

[1] The *Highmark* decision rests in significant part on *Bard Peripheral Vascular, Inc. v. W.L. Gore & Assocs., Inc.*, 682 F.3d 1003, 1006-07 (Fed. Cir. 2012), which held that objective recklessness in a willfulness determination under 35 U.S.C. § 284, "even though predicated on underlying mixed questions of law and fact, is best decided by the judge as a question of law subject to *de novo* review." Until *Bard*, both before and after *In re Seagate Tech., LLC*, 497 F.3d 1360, 1371 (Fed. Cir. 2007) (en banc), we reviewed the willfulness issue for clear error. *See, e.g., Powell v. Home Depot U.S.A., Inc.*, 663 F.3d 1221, 1229 (Fed. Cir. 2011) ("When the resolution of a particular issue or defense is a factual matter, however, whether reliance on that issue or defense was reasonable under the objective prong is properly considered by the jury."). *Bard's* holding that the objective prong "*should always* be decided as a matter of law by the judge" cannot be reconciled with *Powell*. *Bard*, 682 F.3d at 1006-07 (emphasis added). For reasons similar to those discussed below, this court should also revisit *Bard* en banc.

Columbia Pictures Indus., Inc. (*PRE*), 508 U.S. 49 (1993), to justify this new *de novo*, no deference, approach to objective reasonableness. *See Highmark*, 687 F.3d at 1310 n.1; *Bard*, 682 F.3d at 1007-08. The *Highmark* majority believed that "The Supreme Court in *Professional Real Estate* held that objective baselessness in this context is an issue decided by the court as a matter of law." *Highmark*, 687 F.3d at 1310 n.1. With all due respect, it did not. Objective baselessness was *not* even at issue in *Professional Real Estate*. The parties conceded that the litigation was *not* objectively baseless. *PRE*, 508 U.S. at 54; *Columbia Pictures Indus., Inc. v. Prof'l Real Estate Investors, Inc.*, 944 F.2d 1525, 1530 (9th Cir. 1991) ("PRE does not challenge the district court's finding that the infringement action was brought with probable cause, i.e., that the suit was not baseless. Rather, PRE argues that the copyright infringement lawsuit is a sham because Columbia Pictures did not honestly believe that the infringement claim was meritorious."). PRE argued to the Supreme Court that: "Lawsuits that are 'not baseless' may nevertheless fall within the sham exception where they are pursued with indifference to their outcome and for reasons such as directly to burden and harass a competitor and thereby unreasonably restrain competition." Pet'r Br., *PRE*, 1992 WL 541279, at *13 (May 14, 1992). The Court rejected this contention: "We left unresolved the question presented by this case—whether litigation may be sham merely because a subjective expectation of success does not motivate the litigant. We now answer this question in the negative and hold that an objectively reasonable effort to litigate cannot be sham regardless of subjective intent."

PRE, 508 U.S. at 57. The Supreme Court explained: "In sum, fidelity to precedent compels us to reject a purely subjective definition of 'sham.'" *Id.* at 60.

What the Supreme Court in *Professional Real Estate* did *not* say is that objective reasonableness or probable cause is always decided as a matter of law. The Court in *Professional Real Estate* could decide the issue of objective reasonableness as a matter of law was because there were *no facts in dispute*: "*Where, as here, there is no dispute over the predicate facts* of the underlying legal proceeding, a court may decide probable cause as a matter of law." *Id.* at 63 (emphasis added).[2] It is thus error to state: "The Supreme Court in *Professional Real Estate* held that objective reasonableness in this context is an issue decided by the court as a matter of law." *Highmark*, 687 F.3d at 1310 n.1. The *Highmark* majority's interpretation of *Professional Real Estate* is at odds with numerous other courts that have held, pursuant to *Professional Real Estate*, that when predicate facts are in dispute, objective reasonableness *cannot* be decided as a matter of law.[3] Creating a unique standard for objective

---

[2] This is not a particularly surprising approach. Courts often decide otherwise factual issues as a matter of law when the underlying facts are not in dispute. This is sometimes called summary judgment. *See* Fed. R. Civ. P. 56.

[3] *See, e.g.*, *Pers. Dep't, Inc. v. Prof'l Staff Leasing Corp.*, 297 Fed. App'x 773, 780 (10th Cir. 2008) (unpublished) ("Supreme Court precedent [(including *Professional Real Estate*)] clearly contemplates that when genuine issues of material fact exist regarding a defendant's probable cause to institute the underlying lawsuit, summary judgment [] is improper."); *In re Relafen Antitrust Litig.*, 346 F. Supp. 2d 349, 361 (D. Mass. 2004) ("Here, 'the facts tending to establish the existence or want of existence of probable cause' were disputed, rendering

baselessness, applicable only to patent cases, is a misinterpretation of *Professional Real Estate* and is simply wrong.

II.

The question of whether something is "objectively baseless" is not unique to patent law or the Federal Circuit. In fact, there are many instances when a court must consider whether a litigant's position is objectively baseless or objectively reasonable. And in those instances, the regional circuits and the Supreme Court have consistently held that deference should be given by the appellate court to the trial court's conclusions.

Indeed, in *Professional Real Estate*, the Supreme Court analogized objective baselessness, or lack of probable cause, to the good cause standard of Federal Rule of Civil Procedure 11. *See PRE*, 508 U.S. at 65. Under Rule 11, as with objective baselessness, the district court must determine whether a party's position was objectively unreasonable. *Cooter & Gell v. Hartmax Corp.*, 496 U.S. 384, 393 (1990); *see also,*

---

the question inappropriate for decision as matter of law." (citation omitted)); *New York Jets LLC v. Cablevision Sys. Corp.*, No. 05 Civ. 2875(HB), 2005 WL 3454652, at *2 (S.D.N.Y. Dec. 19, 2005) ("I cannot determine, as a matter of law, that [prior] actions were (or were not) objectively baseless"); *In re Neurontin Antitrust Litig.*, Nos. 02-1830, 02-1731, 02-5583, 2009 WL 2751029, at *22 (D.N.J. Aug. 28, 2009) ("Furthermore, when the predicate facts of an allegedly sham lawsuit are disputed, sham litigation claims should not be decided by the court as a matter of law."); *Echostar Satellite, L.L.C. v. ViewTech, Inc.*, No. 07-CV-1273, 2009 WL 1668712, at *3 (S.D. Cal. May 27, 2009) (concluding that because the facts were disputed, the court could not determine as a matter of law "whether the litigation is objectively reasonable").

e.g., *Morris v. Wachovia Sec. Inc.*, 448 F.3d 268, 277 (4th Cir. 2006).

In *Cooter*, the Supreme Court concluded that all aspects of a sanctions determination under Rule 11 should be reviewed on appeal under an abuse of discretion standard. 496 U.S. at 401. The Court recognized that some variation in the application of a standard based on reasonableness, like Rule 11, is inevitable, but that the "district court is better situated than the court of appeals to marshal the pertinent facts and apply the fact-dependent legal standard mandated by Rule 11." *Id.* at 402-03. There is no way to reconcile our court's *de novo* standard of review for objective baselessness in patent cases with *Cooter* and *Professional Real Estate*.

Not surprisingly, given the clear direction from the Supreme Court, the regional circuits are unanimous that the issue of objective reasonableness under Rule 11 is to be reviewed deferentially by the appellate courts.[4] I can divine no reason to create a rule

---

[4] *See, e.g.*, *Whitehead v. Food Max of Miss., Inc.*, 332 F.3d 796, 802-03 (5th Cir. 2003) (determining compliance with Rule 11 is "an objective, not subjective, standard of reasonableness under the circumstances" and concluding that the "district court is better situated than the court of appeals to marshal the pertinent facts and apply the fact-dependent legal standard mandated by Rule 11" (citation omitted)); *see also CQ Int'l Co., Inc. v. Rochem Int'l, Inc., USA*, 659 F.3d 53, 62-63 (1st Cir. 2011); *Star Mark Mgmt., Inc. v. Koon Chun Hing Kee Soy & Sauce Factory, LTD.*, 682 F.3d 170, 177-78 (2d Cir. 2012); *In re Taylor*, 655 F.3d 274, 282-83 (3d Cir. 2011); *Merritt v. Int'l Ass'n of Machinists & Aerospace Workers*, 613 F.3d 609, 626-27 (6th Cir. 2010); *Ross v. City of Waukegan*, 5 F.3d 1084, 1088-89 (7th Cir. 1993); *Clark v. United Parcel Serv.*, 460 F.3d 1004, 1010-11 (8th Cir. 2006); *G.C. & K.B. Invs., Inc. v. Wilson*, 326

unique to patent cases, to disregard such clear and wise precedent from our sister circuits, or to disregard the Supreme Court's precedent in *Cooter* and *Professional Real Estate*.

The parallels to the Rule 11 inquiry are compelling, and in my view dispositive of how we should approach the "objective baselessness" inquiry. But Rule 11 is not the only situation in which courts confront objective reasonableness. For example, the Equal Access to Justice Act (EAJA) awards a prevailing party costs and attorney fees unless "the court finds that the position of the United States was substantially justified." 28 U.S.C. § 2412(d)(1)(A). In *Pierce v. Underwood*, 487 U.S. 552 (1988), the Supreme Court analyzed the EAJA fee-shifting provision and concluded that the "substantially justified" language means "justified to a degree that could satisfy a reasonable person," which is "no different from the 'reasonable basis both in law and fact' formulation" adopted by the vast majority of the appellate courts having addressed the issue. 487 U.S. at 565. As a result, the Court concluded that the issue should be reviewed under the abuse of discretion standard. The Court reasoned that the district court was in the best position to make this determination:

> [D]etermining whether mixed questions of law and fact are to be treated as questions of law or of fact for purposes of appellate review . . . has turned on a determination that, as a matter of the sound administration of justice,

---

F.3d 1096, 1109 (9th Cir. 2003); *Dodd Ins. Servs., Inc. v. Royal Ins. Co. of Am.*, 935 F.2d 1152, 1155 (10th Cir. 1991); *Kaplan v. DaimlerChrysler, A.G.*, 331 F.3d 1251, 1255 (11th Cir. 2003).

> one judicial actor is better positioned than another to decide the issue in question. We think that consideration relevant in the present context as well, and it argues in favor of deferential, abuse-of-discretion review. To begin with, some of the elements that bear upon whether the Government's position was substantially justified may be known only to the district court. Not infrequently, the question will turn upon not merely what was the law, but what was the evidence regarding the facts. By reason of settlement conferences and other pretrial activities, the district court may have insights not conveyed by the record, into such matters as whether particular evidence was worthy of being relied upon, or whether critical facts could easily have been verified by the Government.

Pierce, 487 U.S. at 560 (internal quotation marks and citations omitted).

The same can be said about the objectively baseless analysis in the exceptional case context. The district court is better situated to decide whether a litigation position was objectively baseless. Such a determination may turn on legal positions taken, on factual support for those positions, or both. The trial court is in the best position to make the requisite findings and weigh them accordingly. Like the EAJA determination, the district court's objective baselessness findings should be given deference on appeal.

Regional circuits also consider whether a prevailing party is entitled to attorney fees under 28 U.S.C. § 1927. In a majority of circuits, the § 1927 inquiry

is objective, just like § 285's "objective baselessness." *See Jensen v. Phillips Screw Co.*, 546 F.3d 59, 64-65 (1st Cir. 2008) ("In this circuit, courts use a mainly objective standard for the purpose of determining when a lawyer's actions are unreasonable or vexatious. . . . This focus on objective measurement comports with the majority view across the circuits." (citations to cases from the Sixth, Seventh, Eleventh, and Federal Circuits omitted)); *Lee v. L.B. Sales, Inc.*, 177 F.3d 714, 718-19 (8th Cir. 1999). In all regional circuits, regardless of whether the inquiry is objective or subjective, it is a question of fact that is reviewed with deference.[5]

Despite all of these parallel inquiries where the regional circuits and the Supreme Court have consistently held that the objective reasonableness finding is to be given deference on appeal, *Highmark* holds that our court should review this determination *de novo*. There is no reason a district court judge's findings on objective reasonableness should be reviewed without deference (*de novo*) in patent cases, but given deference in all other areas of law. There is no justification in either law or logic for the departure that our court takes in *Highmark*.

---

[5] See Jensen, 546 F.3d at 64-65; Gollomp v. Spitzer, 568 F.3d 355, 368 (2d Cir. 2009); LaSalle Nat. Bank v. First Conn. Holding Grp., LLC XXIII, 287 F.3d 279, 288 (3d Cir. 2002); Newport News Holdings Corp. v. Virtual City Vision, Inc., 650 F.3d 423, 443 (4th Cir. 2011); Cambridge Toxicology Grp., Inc. v. Exnicos, 495 F.3d 169, 180 (5th Cir. 2007); Braunstein v. Ariz. Dep't of Transp., 683 F.3d 1177, 1184 (9th Cir. 2012); Roth v. Green, 466 F.3d 1179, 1187 (10th Cir. 2006).

III.

As Judge Mayer explained in his dissent, "the question of what constitutes reasonable conduct under varying circumstances is a quintessentially factual issue." *Highmark*, 687 F.3d at 1321 (Mayer, J., dissenting). An objectively baseless lawsuit is one in which no reasonable litigant could reasonably expect success on the merits. *PRE*, 508 U.S. at 60. The question is not whether the litigation or positions taken in litigation are actually meritorious but rather whether a reasonable person in similar circumstances would have expected any chance of success. Thus, whether a defendant's anticipation defense is considered "objectively baseless" depends not on whether the defense is actually meritorious, but instead on whether a reasonable attorney would think the defense is completely meritless in light of the facts and circumstances relevant to the defense. District court judges live with these cases, often for many years. They are better situated to review the evidence, hear the testimony and evaluate the parties' conduct, behavior, and positions in the litigation.[6] There is simply no reason to believe that

---

[6] *See Eon-Net*, 653 F.3d at 1324 ("When reviewing an exceptional case finding for clear error, we are mindful that the district court has lived with the case and the lawyers for an extended period. Having only the briefs and the cold record, and with counsel appearing before us for only a short period of time, we are not in the position to second-guess the trial court's judgment."); *Takeda Chem. Indus., Ltd. v. Mylan Labs., Inc.*, 549 F.3d 1381, 1391-92 (Fed. Cir. 2008) (Bryson, J., concurring) ("A district judge who has lived with a case and the lawyers for an extended period . . . is infinitely better situated than we are to . . . assess whether the case should be treated as exceptional and whether fees should be awarded. Where the trial court applies the proper legal standards and conducts a thorough

we, as an appellate tribunal spending just thirty minutes with the attorneys and having a limited record and knowledge of the events taking place in the proceeding below, are in a better position than the trial judge to decide "objective baselessness." Objective baselessness in the § 285 context, like Rule 11, the EAJA, and § 1927, involves fact issues decided by the district court judge that should be afforded deference on appeal.

---

review of the circumstances bearing upon the section 285 inquiry, there is little room for a reviewing court to second-guess the trial court's judgment."); *Thomas v. Capital Sec. Svcs., Inc.*, 836 F.2d 866, 873 (5th Cir. 1988) ("The trial judge is in the best position to review the factual circumstances and render an informed judgment as he is intimately involved with the case, the litigants, and the attorneys on a daily basis."); *O'Connell v. Champion Int'l Corp.*, 812 F.2d 393, 395 (8th Cir. 1987) ("This [Rule 11] determination . . . rests upon and is informed by the District Court's intimate familiarity with the case, parties, and counsel, a familiarity we cannot have. Such a determination deserves substantial deference from a reviewing court."); *Mendez-Aponte v. Bonilla*, 645 F.3d 60, 68 (1st Cir. 2011) ("We give deference to a district court's decision to impose sanctions because it is in the best position to 'evaluate the circumstances surrounding an alleged violation and render an informed judgment.'" (citation omitted)); *Thompson v. RelationServe Media, Inc.*, 610 F.3d 628, 638 (11th Cir. 2010) ("Given the district court's familiarity with the case and the parties, the district court is in a better position 'to make these [Rule 11] determinations in the first instance, explicitly and on the record.'"); *Mars Steel Corp. v. Cont'l Bank N.A.*, 880 F.2d 928, 933 (7th Cir1989) (en banc) ("Because the district courts have the best information about the patterns of their cases, they are in the best position to determine whether a legal position is far enough off the mark to be frivolous or whether an attorney conducted an adequate inquiry under the particular circumstances of a case.").

IV.

We need to avoid the temptation to label everything legal and usurp the province of the fact finder with our manufactured *de novo* review. We have done it with claim construction, *see Cybor*, with willfulness, *see Bard*, and now with the exceptional case, *see Highmark*. When we convert factual issues, or mixed questions of law and fact, into legal ones for our *de novo* review, we undermine the uniformity and predictability goals this court was designed to advance.

This is not to say that these issues should be given to the jury. The Supreme Court held that claim construction is better decided by the district court judge. *Markman v. Westview Instruments, Inc.*, 517 U.S. 370, 388 (1996). This does not, however, morph a mixed question of law and fact into a pure legal question entitled to no deference on appeal. Stating that something is better decided by the judge is not the same as saying it is a matter of law. The same is true with the objectively baseless analysis in the willfulness context. We have concluded then when the analysis turns on purely legal issues, the judge not the jury should be the fact finder. *Powell*, 663 F.3d at 1236-37. This is logical. It does not, however, convert the issue into a legal one. For example, in deciding whether a defendant's claim construction position is objectively baseless, the judge, not the jury, decides claim construction. The jury would not have heard the claim construction arguments; they are held in a *Markman* hearing outside the presence of the jury. In that circumstance, it makes no sense for the jury to decide whether arguments it never heard were objectively

baseless. The judge is better suited to make this determination. That does not, however, make the inquiry purely legal entitled to no deference on appeal. Whether a district court's claim construction is correct on the merits is significantly different from whether a litigant's claim construction position is objectively baseless. Indeed, whether a party's position—on claim construction, anticipation, obviousness, or otherwise—is objectively baseless involves consideration of not only the state of the law when the position was advanced, but also the underlying facts and circumstances forming the basis of the position. Objective baselessness is a finding that should be given deference by this court.

CONCLUSION

Highmark is contrary to Supreme Court precedent, contrary to the practice of the other circuits, and improperly shifts the decision-making balance between the trial and appellate courts. The Supreme Court reprimanded our court not so long ago for departing from the "long tradition of equity practice" and creating patent-law specific rules. It is clear from *Highmark* that our court has not learned this lesson. I dissent from the denial of en banc review in this case.

REYNA, *Circuit Judge*, dissenting, with whom RADER, *Chief Judge*, joins in parts I–II, and with whom MOORE, O'MALLEY and WALLACH, *Circuit Judges*, join in full.

I dissent from the court's refusal to consider *en banc* the proper standard of review governing exceptional case determinations under 35 U.S.C. § 285. The majority decision is incorrect in

presuming it appropriate for us to invade the fact finding province of the lower court.[1] Sitting as a three judge panel, the *Highmark* majority shifts our standard of review from the deferential clear error standard to *de novo* review when assessing whether infringement allegations are objectively baseless. Until now, we have treated all aspects of § 285 determinations as issues of fact and we have repeatedly emphasized the importance of deferring to the trial judge who is intimately familiar with the litigation and has observed all case developments—factual, legal, evidentiary, or otherwise—before ruling on a motion for attorneys' fees. As explained below, this court now adopts an erroneous approach that disregards binding precedent, misunderstands the deference owed to the factual findings of the district court, and overstates the significance of § 284 authority.

I

In the proceedings below, the district court awarded an accused infringer attorneys' fees, expert fees, and costs after it prevailed on a motion for summary judgment of non-infringement. *See Highmark Inc. v. Allcare Health Mgmt. Sys., Inc.*, 687 F.3d 1300, 1307–09 (Fed. Cir. 2012). The award of fees followed the district court's declaration that the case was exceptional. *Highmark, Inc. v. Allcare Health Mgmt. Sys., Inc.*, 706 F. Supp. 2d 713, 738 (N.D. Tex. 2010). The district court explained that

---

[1] Many of the issues I raise herein have previously been addressed in Judge Mayer's well-crafted dissent. I share in full my colleague's views in this particular case. *See generally Highmark Inc. v. Allcare Health Mgmt. Sys., Inc.*, 687 F.3d 1300, 1319–24 (Fed. Cir. 2012).

the patentee's allegations of infringement were frivolous, *id.* at 727–29, and also found that the patentee impermissibly shifted its claim construction positions throughout the course of the proceedings, made improper arguments on the issues of *res judicata* and collateral estoppel, and made misrepresentations to the transferor court in connection with a motion to transfer venue. *Id.* at 733-36. On appeal, this court reversed the district court's findings with regard to litigation misconduct and reversed the award of attorneys' fees for one of the two independent claims because it determined as a matter of law that the infringement claim was not objectively baseless.

Our case law regarding § 285 is a well-established "two-step process." *Forest Labs., Inc. v. Abbott Labs.*, 339 F.3d 1324, 1327–28 (Fed. Cir. 2003). As relevant here, the first step is for a prevailing party to establish by clear and convincing evidence that the case is "exceptional." *Id.* at 1327. In *Brooks Furniture*, we explained that a showing of exceptionality can be made only if (1) the litigation is brought in subjective bad faith, and (2) the litigation is objectively baseless. *Brooks Furniture Mfg., Inc. v. Dutailier Int'l, Inc.*, 393 F.3d 1378, 1381 (Fed. Cir. 2005) (relying on *Prof'l Real Estate Investors, Inc. v. Columbia Pictures Indus., Inc.*, 508 U.S. 49, 60 (1993)). Thus, our cases consistently required a two-prong analysis assessing both the objective reasonableness of the losing party's positions and the losing party's subjective intent.

This court routinely reviews lower courts' § 285 rulings in patent cases, and we have consistently done so by reversing only in instances of clear error. *E.g.*,

Eon-Net LP v. Zimmerman, 653 F.3d 1314, 1323–24 (Fed. Cir. 2011) ("[W]e review the court's exceptional case finding for clear error."); *ICU Med., Inc. v. Alaris Med. Sys., Inc.*, 558 F.3d 1368, 1380 (Fed. Cir. 2009) (affirming the district court's exceptional case findings because they were not clearly erroneous); *Nilssen v. Osram Sylvania, Inc.*, 528 F.3d 1352, 1357–58 (Fed. Cir. 2008) (explaining that the "court did not clearly err in finding [the] case exceptional"); *see also Forest Labs*, 339 F.3d at 1328 (emphasizing that this court reviews a trial "court's factual findings, including whether the case is exceptional, for clear error"). In reviewing for clear error, we have noted that district courts are owed a "high level of deference," *Wedgetail, Ltd. v. Huddleston Deluxe, Inc.*, 576 F.3d 1302, 1305 (Fed. Cir. 2009) (internal citation omitted), because "[w]hether a case is 'exceptional' in accordance with 35 U.S.C. § 285, is a question of fact." *Brasseler, U.S.A. v. Stryker Sales Corp.*, 267 F.3d 1370, 1378 (Fed. Cir. 2001); *see also Forest Group, Inc. v. Bon Tool Co.*, 590 F.3d 1295, 1304 (Fed. Cir. 2009) (discussing the determination of whether the case is exceptional as "a question of fact").

The purpose underlying 35 U.S.C. § 285 is to compensate a prevailing party for its monetary outlays in the prosecution or defense of the suit. *See Central Soya Co. v. Geo. A. Hormel & Co.*, 723 F.2d 1573, 1578 (Fed. Cir. 1983). Congress authorized awards of attorney fees to prevailing defendants "to enable the court to prevent a gross injustice to an alleged infringer." S. Rep. No. 1503, 79th Cong., 2d Sess. (1946), *reprinted in* 1946 U.S. Code Cong. Serv. 1386, 1387; *see also Mathis v. Spears*, 857 F.2d 749, 758 (Fed. Cir. 1988). Thus, the exceptional case

determination is bound up with whether a court will "make whole a party injured by an egregious abuse of the judicial process." *Mathis*, 857 F.2d at 758 (citing *Hall v. Cole*, 412 U.S. 1, 5 (1973)).

Against this backdrop, the two-judge *Highmark* majority alters the standard of review for a patent-specific statute without accounting for the litany of precedential decisions applying the clear error standard to the objective and subjective exceptional case inquiries. This departure constitutes an issue of great importance and I desire *en banc* action to examine—with the input of the full court—whether our prior precedent should be overruled. *Preminger v. Sec'y of VA*, 517 F.3d 1299, 1309 (Fed. Cir. 2008) (citing *Sacco v. Dep't of Justice*, 317 F.3d 1384, 1386 (Fed. Cir. 2003) (holding that a prior precedential decision on a point of law cannot be overruled or avoided unless the court sits *en banc*)).

II

The principle of *stare decisis* tasks courts with abiding by, or adhering to, decided cases. *Accord Hubbard v. United States*, 514 U.S. 695, 711 (1995) (Scalia, J., concurring). *Stare decisis* is the preferred course because it "promotes the evenhanded, predictable, and consistent development of legal principles, fosters reliance on judicial decisions, and contributes to the actual and perceived integrity of the judicial process." *Payne v. Tennessee*, 501 U.S. 808, 827 (1991) (internal citation omitted); *see also In re Bilski*, 545 F.3d 943, 993–94 (Fed. Cir. 2008), *aff'd but criticized on other grounds*, *Bilski v. Kappos*, 130 S. Ct. 3218 (2010) (noting the judicial obligation to respect the principles of *stare decisis*). The Supreme Court suggests that governing decisions

should only be set aside where the applicable rule of law is "unworkable" or "badly reasoned." *Payne*, 501 U.S. at 827.

We have a duty today and every day to yield to settled rules in our jurisprudence. Even a cursory review of our cases reveals that we have clearly set forth a deferential standard of review and we have routinely communicated to litigants and lower courts that we will review all § 285 findings for clear error. Here, the established precedent is especially wise, and should not be disturbed because it respects the enduring balance between the trial judge and the appellate panel in carrying out their distinct responsibilities. *E.g.*, *Salve Regina College v. Russell*, 499 U.S. 225, 233 (1991) (noting that established standards of deference for appellate review of district-court determinations reflects "an accommodation of the respective institutional advantages of trial and appellate courts").

The *Highmark* decision casually sets aside binding precedent that was neither unworkable nor badly reasoned. While we may be tempted to view ourselves as best-positioned to weigh whether a given party's claim construction or infringement positions are objectively reasonable, in doing so, we fallaciously presume that we can neatly separate intertwined issues of law and fact. As the Supreme Court teaches, however, "[m]aking such distinctions is particularly difficult" since there is no "rule or principle that will unerringly distinguish a factual finding from a legal conclusion" in the context of attorney fee awards. *Cooter & Gell v. Hartmarx Corp.*, 496 U.S. 384, 401 (1990); *see also Highmark*, 687 F.3d at 1322 (Mayer, J., dissenting) (recognizing

that implementing a *de novo* standard of review for questions of objective baselessness will "undoubtedly spawn unneeded litigation over which issues in a section 285 determination are issues of fact, which are issues of law, and which are mixed questions of law and fact").

Instead of applying *de novo* review to a mixed question of law and fact, I would abide by the Supreme Court's guidance and continue to apply the clear error standard to a trial court's informed judgment. *See Salve Regina College*, 499 U.S. at 233 (explaining that a "deferential review of mixed questions of law and fact is warranted when it appears that the district court is better positioned than the appellate court to decide the issue in question or that probing appellate scrutiny will not contribute to the clarity of legal doctrine") (internal citations omitted); *see also Cooter & Gell*, 496 U.S. at 402 ("[T]he district court is better situated than the court of appeals to marshal the pertinent facts and apply the fact-dependent legal standard mandated by Rule 11"). This path more closely tracks the § 285 statutory goals such as deterring suits that a district court finds are "clearly unwarranted." *Automated Business Cos. v. NEC Am., Inc.*, 202 F.3d 1353, 1355 (Fed. Cir. 2000); *see also Mathis*, 857 F.2d at 754, 758.

Nowhere is the mixed nature of objective baselessness conclusions more apparent than when courts accept the testimony of experts to assist in making legal determinations. The inherent complexity of patent cases almost always requires expert testimony on questions of infringement and validity, and this testimony certainly bears upon

whether a litigant's position is objectively baseless. I am persuaded that we tread too far by declining any deference to lower court conclusions that may turn on, or be informed by, how a skilled artisan would understand the claims.[2] In my view, the judge presiding over claim construction, summary judgment, and trial is uniquely positioned to refer back to earlier proceedings when parsing through whether or not a party was objectively reasonable in litigating a particular claim or the case as a whole. Even when we attempt to "look backwards" and "consider the record as a whole," *see Highmark*, 687 F.3d at 1310–11, this court is not on equal footing with the district court in weighing determinative facts, especially in the context of expert opinions. *Salve Regina College*, 499 U.S. at 233 (recognizing a trial court's superior fact finding ability and demanding that due regard be given to a trial court in judging the credibility of the witnesses).

III

I take particular issue with the majority's overstated reliance on developments in the willful

---

[2] For example, in a situation where the objective baselessness allegations are premised on a finding that certain claims were insolubly ambiguous pursuant to 35 U.S.C. § 112, ¶ 2, a trial judge may dismiss all or part of the case based on a showing that one of ordinary skill in the relevant art could not discern the boundaries of the claim based on the claim language, the specification, the prosecution history, and the knowledge in the relevant art. *See Haemonetics Corp. v. Baxter Healthcare Corp.*, 607 F.3d 776, 783 (Fed. Cir. 2010). In such a case, it is entirely possible that this decision would be reached through reliance on expert testimony. We as an appellate court cannot adequately, if at all, assess credibility of such testimony because the witness is not before us in person. We should thus limit our intervention to instances of clear error.

infringement context in order to dictate a less deferential standard of review in deciding whether it is proper to award attorneys' fees. The majority does not make even a veiled attempt to premise its decision on applicable § 285 cases. Instead, it manipulates two inapposite § 284 cases in order to unnecessarily extend *de novo* review. [3] *See Highmark*, 687 F.3d at 1309.

First, the majority quotes *Bard Peripheral Vascular, Inc. v. W.L. Gore & Assocs.*, 682 F.3d 1003, 1007 (Fed. Cir. 2012), which held that objective recklessness in a willfulness determination is subject to *de novo* review even though the "ultimate question of willful infringement has long been treated as a question of fact." *Id.* at 1006–07 (internal citations omitted). Despite the puzzling conclusion in *Bard* that we can transform a question of fact into a mixed question of law and fact in order to exclude a jury from deciding what conduct is reasonable, I am aware of no Supreme Court or *en banc* authority requiring us to apply the same standard of review for § 285 as we do in § 284. Even assuming *Bard* was correctly decided, in the absence of a compelling reason or explanation to further extend *Bard*'s

---

[3] *Highmark* does not incorporate the discussion in *iLOR v. Google* which equated the objective baselessness standard for enhanced damages and attorneys' fees and the objective recklessness standard for willful infringement actions. *See iLOR, LLC v. Google, Inc.*, 631 F.3d 1372, 1377 (Fed. Cir. 2011). Even so, *iLOR* does not state that we are departing from a clear error standard of review for § 285. Indeed, even after we decided *iLOR*, we continued to review the trial court's objective baselessness findings for clear error. *See Eon-Net*, 653 F.3d at 1324, 1326 (assessing the reasonableness of the plaintiff's claim construction positions under the clear error standard) (citing *iLOR*, 631 F.3d at 1378–79).

directive allowing questions of fact to masquerade as questions of law, I caution against upsetting the equilibrium we have achieved in reviewing exceptional case determinations.

I consider the two standards of review to be distinct questions, in part, because the posture by which the two questions reach this court is not the same. Both before and after our decision in *In re Seagate*, the question of willful infringement[4] has frequently been submitted to a jury as a question of fact. *See i4i Ltd. P'ship v. Microsoft Corp.*, 598 F.3d 831, 858 (Fed. Cir. 2010) ("Here, the question of willfulness was submitted to the jury. Microsoft does not dispute that the jury instructions were proper under [*Seagate*]."). The same is not true in the § 285 context. By contrast, the exceptional case determination has always been a factual question answered by the trial judge based on that judge's review of objective and subjective circumstances that emerged throughout the course of the entire litigation.[5] Now, as before, trial judges are still being

---

[4] Following *In re Seagate*, the § 284 inquiry has been (1) whether there was clear and convincing evidence that the infringer acted despite an objectively high likelihood that its actions constituted infringement of a valid patent, and (2) whether the infringer knew or should have known of the objectively high risk. *Transocean Offshore Deepwater Drilling, Inc. v. Maersk Contractors USA, Inc.*, 617 F.3d 1296, 1312 (Fed. Cir. 2010) (citing *In re Seagate Tech., LLC*, 497 F.3d 1360, 1371 (Fed. Cir. 2007) (en banc)).

[5] The *Seagate* decision "left it to future cases to further develop the application of [the willful infringement] standard." 497 F.3d at 1371. While I share Judge Mayer's concerns that *Bard* was wrongly decided pursuant to a three judge panel unilaterally shifting the appropriate standard of review, *see Highmark*, 687 F.3d at 1321, I note that at least *Bard* attempted to bolster its

asked to answer a single question—"Is this case exceptional?"—except we now refuse to give their objective baselessness findings any deference. We tie the trial court's hand if we render it mute in the face of such questions. I do not read *Bard* to compel a shift in our standard of review for exceptional case issues and I consider it unnecessary to apply two different standards of review to answer one overriding question.

In addition to relying on *Bard*, the *Highmark* majority suggests that *Powell v. Home Depot*, 663 F.3d 1221, 1236 (Fed. Cir. 2011) supports its newly-adopted standard of review. This reliance is misplaced because *Powell*'s actual treatment of the § 285 issues is inconsistent with the standard of review applied in *Highmark*. In *Powell*, both § 284 and § 285 determinations were discussed, yet *Highmark* ignores that the standards of review were not the same. *See Powell*, 663 F.3d at 1229. Notably, while the *Powell* willful infringement discussion distinguished when an accused infringer's reliance on a particular defense is a question for the court instead of the jury, it never attempted to extend this analysis to the exceptional case discussion. *See id.* at 1236–37. To the contrary, *Powell* affirmed all of the district court's exceptional case findings after reiterating our well-established clear error review for all aspects of the exceptional case determination. *Powell*, 663 F.3d at 1229, 1241 ("A district court's finding that a case is 'exceptional' within the

---

reasoning with a recent § 284 *en banc* decision. The same is not true in the *Highmark* case, where the § 285 standard of review was altered without reference to binding Supreme Court or *en banc* authority discussing the unique purpose of 35 U.S.C. § 285.

meaning of 35 U.S.C. § 285 is reviewed for clear error."). I do not read *Powell* to support the conclusion in *Highmark* and I am left without any basis to determine that the majority was justified in importing the § 284 standard of review to exceptional case inquiries.

OPPOSITION BRIEF

No. 12-1163

IN THE
Supreme Court of the United States

HIGHMARK INC.,

Petitioner,

v.

ALLCARE HEALTH MANAGEMENT SYSTEM, INC.,

Respondent.

On Petition for a Writ of Certiorari to the United States Court of Appeals for the Federal Circuit

BRIEF IN OPPOSITION

Of Counsel:
ERIK R. PUKNYS
FINNEGAN, HENDERSON, FARABOW, GARRETT & DUNNER, LLP
3300 Hillview Avenue
Palo Alto, CA 94304-1203
(650) 849-6600

DONALD R. DUNNER
Counsel of Record
FINNEGAN, HENDERSON, FARABOW, GARRETT & DUNNER, LLP
901 New York Avenue, NW
Washington, DC 20001-4413
(202) 408-4000
don.dunner@finnegan.com

June 13, 2013

RULE 29.6 STATEMENT

Respondent Allcare Health Management System, Inc. has no parent company and no publicly held corporation owns 10 percent or more of its stock.

TABLE OF CONTENTS

Page

RULE 29.6 STATEMENT i

TABLE OF CONTENTS ii

I. PRELIMINARY STATEMENT 1

II. FACTUAL BACKGROUND 5

A. The Parties and Their Dispute 5

1. Allcare and Its Patent 5

2. Allcare's Infringement Investigation 8

3. The *Trigon* Rulings and Allcare's Licensing Efforts 9

4. Allcare's Response to the *Trigon* Rulings 11

5. Highmark's Declaratory Judgment Action 12

6. The Special Master's Reports 13

7. Highmark's ECF Motion, Allcare's Response, and the ECF Order 17

8. Events Between the ECF Order (April 1, 2010) and the Order Vacating Rule 11 Sanctions Against Counsel (August 9, 2010).....22

9. The Federal Circuit's Decision 24

10. The Denial of Highmark's Petition for Rehearing *En Banc*.....29

III. ARGUMENT.....32

A. The Federal Circuit's Decision Is Consistent with this Court's Jurisprudence 32

1. This Court's Decisions Establish That "Objective Reasonableness" Is an Issue of Law Reviewed *De Novo*.....32

2. This Court's Cases Cited by Highmark as Being in Conflict with the Decision Below Do Not Involve Constitutional Rights.....34

3. The Decision Below Does Not Conflict with Fed. R. Civ. P. 52 37

4. The Decision Below Is Not in Conflict with Earlier Federal Circuit or Other Circuit Decisions 38

5. The Policy Arguments Presented by Highmark and Blue Cross Are Inadequate 40

IV. CONCLUSION 42

TABLE OF AUTHORITIES

CASES

Bard Peripheral Vascular, Inc. v. W.L. Gore & Assocs., Inc.,
682 F.3d 1003 (Fed. Cir. 2012) 26

Bose Corp. v. Consumers Union of United States, Inc.,
466 U.S. 485 (1984) 34, 37

Brooks Furniture Manufacturing, Inc. v. Dutailier International, Inc.,
393 F.3d 1378 (Fed. Cir. 2005) 1, 24, 25

California Motor Transport Co. v. Trucking Unlimited,
404 U.S. 508 (1972) 33

Cooper Indus., Inc. v. Leatherman Tool Group, Inc.,
532 U.S. 424 (2001) 34

Cooter & Gell v. Hartmarx Corp.,
496 U.S. 384 (1990) 4, 34, 35

Covad Commc'ns Co. v. Bell Atlantic Corp.,
398 F3d 666 (D.C. Cir. 2005) 2

Crescent City Live Stock Co. v. Butchers Union Slaughter–House Co.,
120 U.S. 141 (1887) 32

FilmTec Corp. v. Hydranautics,
67 F.3d 931 (Fed. Cir. 1995) 2, 32, 38, 39

iLOR, LLC v. Google, Inc.,
631 F.3d 1372 (Fed. Cir. 2011) 25, 26

In re Seagate Technology, LLC,
497 F.3d 1360 (Fed. Cir. 2007) 26

Jacobellis v. Ohio,
378 U.S. 184 (1964) 34

Koon v. United States,
518 U.S. 81 (1996) 3, 25, 26, 32

Lighting Ballast Control, LLC v. Philips Electronics North America Corp.,
500 Fed. Appx. 951 (Fed. Cir. 2013) 27

Markman v. Westview Instruments,
517 U.S. 370 (1996) 27

Miller v. Fenton,
474 U.S. 104 (1985) 34

Ornelas v. United States,
517 U.S. 690 (1996) 33

Phillips v. AWH Corporation,
415 F.3d 1303 (Fed. Cir. 2005) 19

Pierce v. Underwood,
487 U.S. 552 (1988) 4, 34, 36

Pitt v. District of Columbia,
491 F3d 494 (D.C. Cir. 2007) 39

Professional Real Estate Investors, Inc. v. Columbia Pictures Indus., Inc.,
508 U.S. 49 (1993) ..... passim

Raylon v. Complus Data Innovations, Inc.,
700 F.3d 1361 (Fed. Cir. 2012) 41

United States v. Garzon,
119 F.3d 1446 (10th Cir. 1997) 39

United States v. Legros,
529 F.3d 470 (2d Cir. 2008) 33

United States v. Nerber,
222 F.3d 597 (9th Cir. 2000) 39

Respondent Allcare Health Management System, Inc. ("Allcare") respectfully files this opposition to the petition for a writ of certiorari filed by Highmark, Inc. ("Highmark").

I. PRELIMINARY STATEMENT

There are many reasons a case may be found exceptional under Section 285. For instance, a case may be exceptional "when there has been some material inappropriate conduct related to the matter in litigation, such as willful infringement, fraud or inequitable conduct in procuring the patent, misconduct during litigation, vexatious or unjustified litigation, conduct that violates Fed. R. Civ. P. 11, or like infractions." *Brooks Furniture Mfg., Inc. v. Dutailier Int'l, Inc.*, 393 F.3d 1378, 1381 (Fed. Cir. 2005). Or a case may be exceptional when an "objectively baseless" litigation is brought in subjective bad faith. *Id.*

Many, perhaps even most, of these bases require extensive fact-finding, but not all of them do. In particular, determining whether a case is "objectively baseless" is a legal conclusion requiring "a retrospective assessment of the merits of the entire litigation and does not rely on the facts present at a particular time and is 'based on the record ultimately made in the infringement proceedings.'" (Pet.App.11a, n.1.) As a result, determining whether a case is "objectively baseless" "does not require fact-finding" because it considers

only "whether the record established in the [underlying] proceeding supports a reasonable argument as to the facts and law." (*Id.*)

This Court has repeatedly recognized the *legal* nature of an "objectively baseless" finding. For instance, the Court has explained that the "sham" litigation exception to *Noerr* immunity cannot apply if the plaintiff's claim was "objectively reasonable," and thus the plaintiff had probable cause to sue. *See, e.g., Professional Real Estate Investors, Inc. v. Columbia Pictures Indus., Inc.*, 508 U.S. 49, 62-63 (1993) ("*PRE*"). The test of whether a plaintiff had probable cause is fundamentally a *legal* one. *Id.* at 63 (stating that where "there is no dispute over the predicate facts of the underlying legal proceeding, a court may decide probable cause as a matter of law"). Past decisions from the Federal Circuit and other circuit courts of appeal have made similar observations. *See, e.g., FilmTec Corp. v. Hydranautics*, 67 F.3d 931, 938 (Fed. Cir. 1995) (stating that "[t]he facts of this case have been established by prior litigations" so "there is no dispute over the facts, [and] the question of whether or not a cause of action is reasonable or an abuse of process is a question of law"); *Covad Commc'ns Co. v. Bell Atlantic Corp.*, 398 F.3d 666 (D.C. Cir. 2005) (stating that because the objective baselessness determination was based solely on "the opinions of the patent courts" (the district court's and Federal Circuit's decisions in the underlying litigation), the issue was a "question of law").

Just as in *FilmTec* and *Covad*, the district court's "objective baselessness" determination below was based solely on the record of the underlying merits litigation. Accordingly, the relevant facts were undisputed and the question of "objective baselessness" was a purely legal one.

Highmark argues that the Federal Circuit should have deferred to the district court's "objective baselessness" determination, but none of the cases cited in its petition supports that argument. To the contrary, this Court's decisions concerning the appropriate scope of appellate review demonstrate that the panel was right. For instance, while no one disputes that a district court's exceptional-case determination is reviewed for an abuse of discretion (Pet.App.183a), not *every* aspect of the district court's decision is entitled to deference. Indeed, this Court has stated that "[a] district court by definition abuses its discretion when it makes an error of law." *Koon v. United States*, 518 U.S. 81, 100 (1996). And, this Court has stated numerous times that the question of "objective baselessness" is one of law. *PRE*, 508 U.S. at 63. Accordingly, even under ordinary abuse-of-discretion review, the district court's *legal* conclusion of "objective baselessness" is not entitled to deference.

Moreover, this Court demands *de novo* review of legal conclusions where Constitutional rights are at risk. In the context of "objective reasonableness" under *PRE*, the Constitutional right of concern is a citizen's First Amendment right "to petition the

Government for a redress of grievances," a right that has long been recognized as including access to the courts. *PRE*, 508 U.S. 56-57. The right to access the courts that is protected by the "objectively baseless" test of *PRE* is the same right protected by the "objectively baseless" test used for Section 285.

Against this weight of authority, Highmark cites two cases—*Pierce v. Underwood*, 487 U.S. 552 (1988) and *Cooter & Gell v. Hartmarx Corp.*, 496 U.S. 384 (1990)—where this Court applied a more relaxed standard of appellate review. Highmark claims that the issues addressed by these cases are analogous to the "objectively baseless" test under Section 285, but they are not. In particular, neither case concerns issues that implicate Constitutional rights. *Pierce* addresses when attorneys' fees can be assessed against the *government* pursuant to the Equal Access to Justice Act ("EAJA"), which obviously does not raise any First Amendment concerns. Similarly, *Cooter* addresses sanctions awarded pursuant to Rule 11, which are intended to punish misconduct and, as the *Cooter* court itself recognized, do "not preclude the refiling of a complaint." 496 U.S. at 396. Accordingly, Rule 11 sanctions, unlike a sanction under Section 285, will rarely, if ever, act to effectively deprive a plaintiff of his First Amendment right to seek redress in the courts.

Moreover, as the panel below noted, typical EAJA or Rule 11 awards are insignificant in comparison to awards resulting from violations of

Section 285. Indeed, in this case the Rule 11 sanctions that were awarded (but later vacated) against Allcare's counsel amounted to a total of $35,000, a tiny fraction of the nearly $5,000,000 assessed against Allcare under Section 285. This disparity between EAJA and Rule 11 awards on the one hand, and Section 285 awards on the other, also demonstrates that *de novo* review of a district court's "objectively baseless" determination is appropriate.

In sum, the Federal Circuit's decision below is entirely consistent with this Court's precedent, which defines the "objectively baseless" inquiry as a legal question and demands that legal conclusions, especially those that could jeopardize Constitutional rights, should be reviewed *de novo*. Accordingly, Highmark's petition should be denied.

II. FACTUAL BACKGROUND

A. The Parties and Their Dispute

1. Allcare and Its Patent

Allcare, the owner of U.S. Patent No. 5,301,105 ("the '105 patent"), was incorporated to develop the system described in it and to license rights to it. (A2778-80; A1039-50). The '105 patent is directed to "managed health care systems" used by managed care organizations, such as insurance companies, to interact with health care providers (physicians or hospitals). (A160[1:4]). Managed care

organizations contract with providers who their members/patients are eligible to see, and who administer complex policies to assure that medical services do not exceed contractually obligated benefits. The process of determining whether a given procedure is appropriate for a patient's particular circumstances is called "utilization review." (A170[21:31-42]). The methods covered by asserted claims 52, 53 (a dependent claim based on claim 52) and 102 involve a computer system that determines, based on criteria provided by the managed care organization and data from the provider concerning the patient and his or her symptoms, whether a proposed mode of treatment requires utilization review. (*Id.*). If it does, the system ensures that payment is not made until the utilization review has been performed and approval has been given. (*Id.*).

There are two embodiments of the invention described in the patent: a "diagnostic smart system" and a "utilization review smart system." (Pet.App.19a). A "diagnostic smart system" analyzes the symptoms reported by the provider and "prepares a list of the most likely medical condition corresponding to such symptoms, together with the generally approved and/or recommended treatment protocols." (*id.*; A162[6:64-67]). In other words, in a "diagnostic smart system" there is a "cause-and-effect" relationship such that the entry of symptoms data causes the system to respond with a treatment proposal. In a "utilization review system," however, the system does not propose a treatment in response to symptoms data. Instead, the symptoms data *and*

the proposed treatment are entered into the system by, for example, the treating physician. (Pet.App.19a; A164[9:53-10:17).

The principal non-infringement issue in the district court and the prior appeal concerned element 52(c):

> (c) entering through said input means into said data processor data symbolic of patient symptoms for tentatively identifying a proposed mode of treatment . . . .

(A6697-99). In particular, while both parties agreed that this language covered *at least* the "diagnostic smart system" embodiment, they disagreed as to whether it also covered the "utilization review smart system" embodiment. Specifically, the parties disputed whether the claim language covered systems, like Highmark's, where the doctor entered both patient symptoms and a proposed mode of treatment. (A6698). As explained below in more detail, at the claim-construction stage of the litigation the district court rejected Highmark's attempt to limit element 52(c) to a "diagnostic smart system."

Although Allcare also asserted claim 102 earlier in the litigation, Allcare withdrew it before the district court ruled on the parties' summary judgment motions. (A11574; A11517). Before then, the principal dispute concerning claim 102 was whether the preamble term "integrated health care

management system" required direct interaction between the patient and his employer. (A1357-58; A6701-02; A54-55). At the claim-construction stage, the special master rejected the construction Highmark proposed and chose instead a construction of claim 102's preamble that was essentially the same as Allcare's. (A1357-58; A6701-02).

2. Allcare's Infringement Investigation

In July 2001, Allcare engaged Seaport Surveys, Inc. ("Seaport"), an independent market research firm, to conduct telephone interviews with various managed care companies to ascertain their capabilities for processing authorizations electronically. (A12214-15). Seaport completed about 328 telephone interviews of such firms, including Highmark, a member of the Blue Cross Blue Shield organization (A12215; A1046).

Highmark's answers to the survey suggested it was infringing the '105 patent, so Allcare conducted an additional investigation. (A12215). This investigation included publicly available sources, including Highmark's website, the websites of third parties who used and serviced Highmark's system, and other materials available on the internet concerning Highmark's system. (A12215-18). Allcare also consulted with its patent litigation counsel, Steven Hill, who confirmed that Allcare had a viable case of infringement against Highmark. (A12454; A12479-80). Thus, Allcare contacted

Highmark and encouraged it to consider taking a license to the '105 patent. (A12216).

Over the next ten months, Allcare (directly and through attorney Hill) held a number of meetings with Highmark. (A12454-56). During the course of these discussions, Highmark argued it did not infringe the '105 patent because, in Highmark's view, its claims required a "diagnostic smart system," and thus did not cover Highmark's system. (A12216-17). Highmark also argued that the '105 patent was unenforceable for inequitable conduct. (*Id.*).

3. The *Trigon* Rulings and Allcare's Licensing Efforts

At the time Allcare was negotiating with Highmark, it was also enforcing the '105 patent against another Blue Cross Blue Shield organization, Trigon Healthcare, Inc., in the Eastern District of Virginia, *Allcare Health Management System, Inc. v. Trigon Healthcare, Inc.*, No. 02-756-A (Hilton, C.J.). Allcare's infringement theory against Trigon was similar to its infringement theory against Highmark. (A12455). In particular, both systems were similar to the "utilization review smart system" disclosed in the '105 patent in that both enabled a physician to enter symptom data and a proposed treatment to obtain authorization from the insurance company. (A12455-56). Highmark's counsel did not deny Hill's description of the similarities between the Trigon and Highmark systems. (*Id.*).

With Highmark's counsel present in the courtroom, Trigon's summary-judgment argument focused on the same issues that Highmark raised in its defense. (A12459). In particular, the parties argued over whether the claims were limited to a "diagnostic smart system" and thus excluded any system that did not provide a proposed mode of treatment in response to the physician's entry of symptoms data. (A12458; A12544-53). The parties also argued whether the patent was invalid or unenforceable for inequitable conduct. (*Id*).

In February 2002, Chief Judge Claude Hilton issued "the *Trigon* rulings," which rejected Trigon's argument that claim 52 required "a 'cause and effect' relationship whereby entry of the data symbolic of symptoms causes the automatic tentative identification of a proposed mode of treatment" (A12349) (the touchstone of a "diagnostic smart system"). Based on the ordinary meaning of the term "for," in "entering through said input means into said data processor data symbolic of patient symptoms *for* tentatively identifying a proposed mode of treatment" (i.e., that "for" simply means "corresponding to" or "with a view towards"), Judge Hilton held that the entry of data symbolic of patient symptoms did not have to cause the system to suggest a proposed mode of treatment. (A12349, A12455-60). Applying this claim construction—which Highmark itself conceded is "remarkably similar" to the claim construction in this case (*see* A11974)—Judge Hilton *denied* Trigon's motion for summary judgment of non-infringement as to claim

52. (A12369-70; A12460). Judge Hilton also rejected Trigon's inequitable-conduct defense. (*Id.*).

4. Allcare's Response to the *Trigon* Rulings

The *Trigon* rulings increased Allcare's confidence in its conclusion that health insurance companies using systems like Trigon's and Highmark's infringed its patent. (A12477). And, in fact, shortly after the *Trigon* rulings, Trigon licensed the '105 patent, as did many other health insurers. (A12455-57; A12460; A12476-79). But even with this record of success, Allcare was not blindly threatening healthcare companies to take a license or face certain litigation. In fact, Allcare's investigations sometimes led Allcare to conclude that asserting its patent would be inappropriate. For instance, Allcare investigated Lakewood Health, but after examining Lakewood's system, Allcare advised Lakewood that it did not need to take a license. (A12431).

Amid this flurry of licensing activity, Allcare and Highmark continued to talk. (A12461). Knowing that Allcare's infringement analysis against Highmark was similar to its infringement analysis in the case against Trigon, Highmark asked to see Allcare's infringement claim chart against Trigon, and Hill forwarded a copy in August, 2002. (A12456-57; A12522-23). Highmark did not refute Hill's comparison of Highmark's system to Trigon's or any of Hill's other characterizations of Highmark's system during their discussions, but instead

continued to insist that Judge Hilton's claim construction was wrong—that the claims required a "diagnostic smart system," which Highmark's system lacked. (A12458).

During these negotiations, Allcare repeatedly expressed its preference for an amicable resolution. (A12430, A12435-39). On or about April 3, 2003, Highmark responded to an earlier proposal by Allcare that the parties mediate their dispute. (A12461). As a condition for Highmark's participation, Highmark's counsel asked Hill to guarantee that if mediation did not succeed, any suit would be filed in Highmark's home venue of western Pennsylvania. (*Id.*) When Hill declined, Highmark's counsel placed him on hold, rejoined the call and informed him that Highmark had sued Allcare for declaratory judgment in the Western District of Pennsylvania. (*Id.*)

5. Highmark's Declaratory Judgment Action

After the case was transferred to Texas, Allcare counterclaimed for infringement. (A1039-50). Before filing its counterclaim, Hill reconfirmed Allcare's earlier conclusion that Highmark was infringing by comparing Highmark's system to certain claims of the '105 patent using the *Trigon* claim construction and then confirmed this analysis with technical experts. (A12479-80). The attorney who filed the counterclaim—V. Bryan Medlock, a patent litigator with nearly 50 years of experience and the head of Sidley & Austin's intellectual

property law group—also studied Allcare's allegations and found them to have merit. (A12832, A12837).

In addition to asserting that Highmark infringed the '105 patent, Allcare also contended that Highmark was bound by the *Trigon* rulings under *res judicata* and collateral estoppel, based on Allcare's understanding of the Blue Cross Blue Shield relationship between Highmark and the *Trigon* defendants, as well as the observation that Highmark, through its counsel, had collaborated with Trigon's counsel to develop one or more of the defenses that Trigon presented to the Virginia court. (A1046-47). Shortly after Highmark filed its answer to the counterclaims and a motion to dismiss these claim-preclusion counts, Allcare's and Highmark's counsel met-and-conferred about Highmark's relationship to the *Trigon* defendants and its lack of involvement in that case, and Allcare voluntarily withdrew those contentions. (A1064-65; A1085; A12484-85).

6. The Special Master's Reports

Although the district court had initially concluded that a special master would not be necessary for resolving the parties' disputes over claim construction, it later changed its mind after realizing how complex the claim-construction issues were (A6638-39).

Accordingly, the court appointed Don Martens, an experienced patent litigator, as special

master. After extensive briefing and a full day of oral argument, the special master filed his report on claim construction. (A6658). As noted, the principal dispute for claim 52 involved element (c) and in particular, whether it was limited to a "diagnostic smart system" or whether it could also cover a "utilization review smart system." (A6698).

The special master's claim-construction recommendation, like Judge Hilton's *Trigon* rulings, rejected Highmark's attempt to limit the claims to the "diagnostic smart system" embodiment. (A6699). On the other hand, however, the special master (and the court in later adopting his recommendations) refused to resolve whether the claims covered "utilization review smart systems," like Highmark's, that require a doctor to enter both the patient symptoms and a mode of treatment. (A6699). Indeed, the Special Master went even further and said that he was refusing to decide "whether the *accused* method is covered by element 52(c)" because "*[t]hat is an infringement issue for the trier of fact*, not a claim construction issue." *Id.* (emphasis added). The special master's report also indicated elsewhere that he expected a jury would be required to resolve the dispute between Allcare and Highmark, suggesting that "in preparing jury instructions, the parties and the Court should consider whether construing [the claims] for [the] jury will add confusion, rather than reducing it." (A6667). The special master also found for Allcare on the principal dispute concerning claim 102, adopting its proposed construction of the term "integrated health care management system."

(A6701-02). The district court adopted the special master's report in its entirety. (A7144-45).

Because Allcare had defeated Highmark's attempt to limit claim 52 to a "diagnostic smart system" and convinced the district court that its construction of claim 102 was the correct one, at this point it seemed to Allcare that it was prevailing in its infringement position just as it had in the *Trigon* case. Accordingly, Allcare continued to assert claims 52, 53 and 102. (A12475-78).

Highmark subsequently moved for summary judgment of invalidity and non-infringement of claims 52 and 53, and non-infringement of claim 102. (A11574). While Allcare opposed Highmark's motion with regard to claims 52 and 53, Allcare did not challenge Highmark's arguments that claim 102 was not infringed, and ultimately voluntarily withdrew that claim from the case. (*Id.*; A11517).

The district court re-appointed Mr. Martens as special master to make recommendations for summary judgment. (A10251-53). On April 25, 2008, the special master filed his report (A11566) which, contrary to his earlier statement concerning claim 52 that the "infringement issue [was] for the trier of fact" (A6684), found that there was no infringement *as a matter of law*, and thus recommended that summary judgment of non-infringement be granted.

(A11588).[1] The special master also recommended that Highmark's motion for summary judgment as to invalidity be denied. (A11928). The district court adopted these recommendations, entering final judgment of non-infringement and dismissing Highmark's claims of invalidity and unenforceability without prejudice. (A11926-29; A11934).

Even though the special master ruled against Allcare, he did not state that Allcare's position was in any way frivolous or unreasonable. To the contrary, at the conclusion of the summary judgment hearing, he stated: "Argument on both sides has been very helpful, very helpful. This has been a helpful day for me and *there are some difficult issues here* and I will do my very, very best to do them right, and that's all I can promise you." (A12477) (emphasis added).

Allcare appealed the district court's judgment. (A11936). On July 13, 2009, after oral argument, the Federal Circuit affirmed the summary judgment without issuing a written opinion. (A12607-09).

---

[1] Judge Dyk, one of the Federal Circuit judges who presided over both the merits appeal and the sanctions appeal, explained that it appeared to him "that what happened here was that you had an initial claim construction from the Special Master which was then elaborated, if you will, in connection with the summary judgment decision." (A12615).

7. Highmark's ECF Motion, Allcare's Response, and the ECF Order

While the merits appeal was pending, Highmark moved for an exceptional-case finding and Rule 11 sanctions. (Pet.App.6a). Highmark's motion cast Allcare as a "troll" who "sells no products" and "offers no services," but who instead tries to make money by licensing its patent or threatening litigation. (A12022). Although its motion strongly implied it, Highmark presented no evidence that Allcare's claims against other parties (e.g., Trigon) lacked merit or that it had baselessly threatened the other healthcare companies that willingly took licenses.

Highmark also presented a series of actions that it claimed made the case exceptional. These included allegations that the claim of infringement as to claim 52 "was not a close one" (A12020); that Allcare failed to perform a proper pre-suit investigation (A12021); that Allcare's assertions of claim preclusion were frivolous (A12028); that Allcare's claim-construction positions, particularly its construction of element 52(c), kept shifting (A12028-29); that Allcare submitted false arguments concerning whether the interview of Highmark by Seaport could qualify as an Allcare "contact" with the Western District of Pennsylvania in support of Allcare's motion to dismiss (A12024); and that Allcare had a pattern of asserting and withdrawing allegedly meritless claims. (A12020).

Allcare's response described its pre-suit investigation (A12317-20) and showed that it had sought mediation with Highmark both before and after Highmark filed its suit (A12320-21). Allcare also argued that there was no evidence of litigation misconduct, objective baselessness, or subjective bad faith. (A12338-39).

With regard to Highmark's allegation that Allcare shifted its claim-construction positions, Hill explained that he proposed the wording changes to Allcare's claim constructions "for the purpose of trying to forge consensus (i.e., to be less disagreeable), or at least clarify language, and perhaps narrow issues on claim construction by accommodating the relative strengths and weaknesses as I perceived them at the time." A12463-64. And indeed, in all its complaints about Allcare's shifting positions, Highmark had never identified any *material* change in Allcare's proposed constructions. (A12028-29; A11953-56). For instance, the principal disagreement between the parties on element 52(c) was whether it limited the claim to a "diagnostic smart system" (*see supra* pages 9-14, 17-20) and all of Allcare's claim-construction submissions consistently argued it did not. *Compare* A1352-53 *with* A1970-71 *and* A6698. Hill also explained, in response to Highmark's broad complaints of "extensive additional briefing," "delay[]," and significant additional and unnecessary expense" (A11953-56), that Highmark never suffered any prejudice from any change in Allcare's claim-construction language. Indeed, explained Hill, after

the initial round of briefing was complete, the Federal Circuit issued its seminal *en banc* claim-construction decision in *Phillips v. AWH Corp.*, 415 F.3d 1303 (Fed. Cir. 2005), and *both parties* told the district court that a new round of briefing "would benefit their case and [the district court's] review of the claim at issue." (A5094-95; A12464-65).

With regard to Allcare's arguments to the Pennsylvania court, Allcare also submitted a declaration from Robert Shelton, an Allcare vice president, explaining that Allcare "did not control the manner in which Seaport Surveys, an independent contractor, went about completing the surveys." (A67-68).

Highmark never submitted any evidence to rebut the sworn declarations from Hill and Shelton, but argued only that they were "interested parties" whose testimony should be "dismissed as unsupported and inadmissible rhetoric." (A12565).

The district court issued its ECF Order in April 2010. (Pet.App.44a-96a). In the ECF Order, the district court echoed Highmark's distaste for "patent trolls" and the impropriety of a patentee who does not make or sell any products or services suing others who do. (Pet.App.69a).

In a subsection entitled "Allcare's Continued Pursuit of Frivolous Claims," the court found that Allcare's counsel should have realized early in the case that Highmark's system lacked claim element 52(c) (Pet.App.72a-73a) notwithstanding that the

claim-construction order in this case (like Judge Hilton's in *Trigon*) expressly rejected Highmark's argument that this element was limited to a "diagnostic smart system." *See supra* pages 14-15. Indeed, Allcare's infringement expert, Dr. Holland, showed in his report how he believed infringement could be proven under the court's claim construction. (A10911-21). In particular, Dr. Holland explained why the authorization procedure for Highmark's system "meets the definition of utilization review adopted in this case." (A10916-17).

Moreover, contrary to its own claim-construction ruling, which rejected Highmark's attempt to exclude the disclosed "utilization review smart system" from claim 52, the district court stated in its ECF Order that the construction of "for" in the phrase "entering through said input means into said data processor data symbolic of patient symptoms *for* tentatively identifying a proposed mode of treatment" precluded any possibility that Highmark's system infringed. (Pet.App.75a). But nothing in the Court's construction of "for"—that "'for' means 'used to indicate the aim, or purpose of an action or activity'" (A6698)—meant that the claims could not cover a "utilization review smart system" in which a doctor enters both patient symptoms and a proposed mode of treatment. To the contrary, Judge Hilton, based on essentially the same construction of "for," had previously rejected the argument that the claims necessarily excluded a "utilization review smart system" in the *Trigon* case. (A11974; A12369-70; A12460).

Further, the court found that Allcare continued to pursue claim 102 after the claim-construction order (Pet.App.72a) even though the special master adopted *Allcare's* construction and Allcare never opposed Highmark's summary judgment motion for non-infringement on claim 102 and ultimately withdrew claim 102 from this case (A11517-18).

The district court also found that Allcare asserted allegedly meritless claim-preclusion defenses of *res judicata* and collateral estoppel, even though Allcare voluntarily withdrew these defenses in response to a motion filed by Highmark. (Pet.App.81a-82a).

The court also criticized Allcare's "shifting claim construction," but failed to identify any *material* change to Allcare's claim-construction position or any harm caused by Allcare's changed language. (Pet.App.82a-83a). To the contrary, the court noted that Allcare argued that element 52(c) did not limit the claim to a "diagnostic smart system" (Pet.App.74a), which was consistent with Allcare's claim-construction position even before this litigation was filed (Pet.App.46a-47a). Further, with regard to Highmark's main complaint that Allcare's shifting positions necessitated a new round of briefing (A11955), the court acknowledged that *the court itself* had ordered re-briefing in response to the Federal Circuit's *Phillips* decision (Pet.App.83a).

The district court also faulted Allcare for arguing in the Pennsylvania court that Allcare "did

not control the manner in which Seaport's Surveys, an independent contractor, went about *completing* the surveys." (Pet.App.84a (emphasis in original)). The district court did not conclude that the statement was false, but rather called it "at best obfuscatory and it strains the bounds of zealous advocacy." (Pet.App.86a). Despite this criticism, it is not clear what, if any, role this declaration played in the exceptional-case finding since the district court also noted that "[t]he Western District of Pennsylvania does not appear to have placed much weight on Allcare's representation regarding the degree of control over the Seaport Survey" (*id.*), and later observed that "if any court were to issue sanctions based on the motion, it would be most appropriate for the Western District of Pennsylvania to do so" (Pet.App.141a).

At the end of the ECF Order, the district court awarded a total of $35,000 in Rule 11 sanctions against counsel and ordered Highmark to submit a brief itemizing and justifying the attorney fees it was seeking under Section 285. (Pet.App.93a-94a).

8. Events Between the ECF Order (April 1, 2010) and the Order Vacating Rule 11 Sanctions Against Counsel (August 9, 2010)

Shortly after the ECF Order, all of Allcare's lawyers moved to withdraw based on conflicts of interest. (A12786; A12792; A12800; A12804; A12821-23). As a result, Allcare proceeded *pro se* for the next several months.

The attorneys also filed motions to reconsider the Rule 11 sanctions. *See, e.g.*, A12953-60. In particular, Hill further explained his role in Allcare's pre-suit investigation (A12454-80), providing more detail and corroborating documentation (Pet.App.112a-125a). Hill also provided additional explanations for Allcare's allegedly "shifting" claim-construction positions (Pet.App.125a-127a) and for the assertion of the *res judicata* and collateral estoppel defenses, explaining that he believed that all three elements of virtual representation—identity of interest, notice of the prior litigation, and the balance of the equities—were met (Pet.App.128a). Bryan Medlock, the experienced Sidley Austin litigator, also explained why the claim preclusion defenses were asserted (A12837-39).

In August 2010, the district court vacated the Rule 11 sanctions in a lengthy opinion explaining why the court no longer believed that the lawyers deserved to be sanctioned. Even though the court recognized that "[m]ost of the conduct discussed by Highmark in the exceptional-case motion involved not only Allcare, but Allcare's counsel" (Pet.App.104a), the district court stated that its decision to vacate the Rule 11 sanctions "ha[d] no bearing on the Court's exceptional-case finding against Allcare." (Pet.App.147a n.5).

In November 2010, the district court issued its Attorney Fees Order awarding Highmark $4,694,727.40 in attorneys' fees and $209,626.56 in

costs as a result of his finding that this is an "exceptional case" under Section 285. (Pet.App.169a).

9. The Federal Circuit's Decision

The panel hearing the appeal from the exceptional-case award included two of the three Federal Circuit judges who heard the first appeal (the third member of the merits-appeal panel, Chief Judge Michel, had retired). The panel majority, which consisted of the two judges who had heard the merits appeal (A12607;Pet.App.2a), issued its decision over the dissent of the third panel member.

The majority began its analysis by citing *Brooks Furniture Manufacturing, Inc. v. Dutailier International, Inc.*, 393 F.3d 1378 (Fed. Cir. 2005). *Brooks* provides a useful overview of the Federal Circuit's jurisprudence concerning exceptional-case findings under Section 285. In determining whether a case is exceptional, a court first determines whether there has been some material inappropriate conduct, such as willful infringement, inequitable conduct in procuring the patent, litigation misconduct, vexatious or unjustified litigation, or conduct that violates Rule 11. *Id.* at 1381. Absent misconduct in procuring the patent or in the litigation, an exceptional-case finding can be found only if there was an insufficient pre-suit investigation performed or meritless claims or defenses were brought or maintained. Where it is alleged that meritless claims or defenses were asserted, a Section 285 violation may be found only if clear and convincing evidence demonstrates that the

litigation is both (1) brought or maintained in subjective bad faith and (2) objectively baseless. *Id.*; *see also iLOR, LLC v. Google, Inc.*, 631 F.3d 1372, 1377-78 (Fed. Cir. 2011) (applying the *Brooks Furniture* two-pronged test to allegations that the patentee knew "long before filing suit" that its infringement claims were meritless).

In establishing this two-pronged test, *Brooks* expressly adopted the objectively baseless standard from *PRE*. *Brooks*, 393 F.3d at 1381. Under *PRE*, litigation can be deemed objectively baseless only if "no reasonable litigant could realistically expect success on the merits." 508 U.S. at 60. The Federal Circuit has incorporated that same definition into its exceptional-case jurisprudence. *See, e.g., iLOR*, 631 F.3d at 1378.

Brooks also notes that "for an exceptional case, the decision to award attorney fees and the amount thereof are within the district court's sound discretion." *Brooks*, 393 F.3d at 1382. The majority expressly recognized the discretionary nature of the district court's decision. (Pet.App.183a). Under the Federal Circuit's precedents (which are consistent with every other circuit's and this Court's precedents, "[a] district court abuses its discretion when its decision is based on clearly erroneous findings of fact, is based on erroneous interpretations of the law, or is clearly unreasonable, arbitrary or fanciful." *iLOR*, 631 F.3d. at 1376; *see also Koon v. United States*, 518 U.S. 81, 100 (1996)

("A district court by definition abuses its discretion when it makes an error of law.").

Applying the well-established *Brooks* standard, the majority reviewed all five bases for the district court's exceptional-case determination. The majority recognized the "central issue" in this case was "whether Allcare's infringement counterclaims against Highmark were frivolous" and thus applied *PRE*'s "objectively baseless" standard to those allegations. (Pet.App.8a). Because this Court held that the issue of "objective reasonableness" is an issue of law in *PRE*, 508 U.S. 49, the majority reviewed *de novo* the district court's "objectively baseless" determination. (Pet.App.9a-10a n.1).[2]

In reviewing the district court's decision, however, the majority *never* rejected—or even criticized—a single finding of fact the district court made. Instead, the majority's analysis was at all

---

[2] The majority also found support for *de novo* review in the Federal Circuit's decision in *Bard Peripheral Vascular, Inc. v. W.L. Gore & Assocs., Inc.*, 682 F.3d 1003, 1005 (Fed. Cir. 2012), which applied the same standard of review to findings of "objective reasonableness" in the willful infringement context. (Pet.App.9a; *see also iLOR*, 631 F.3d at 1377 ("The objective baselessness standard for enhanced damages and attorneys' fees against a non-prevailing plaintiff under *Brooks Furniture* is identical to the objective recklessness standard for enhanced damages and attorneys' fees against an accused infringer for § 284 willful infringement actions under *In re Seagate Technology, LLC*, 497 F.3d 1360 (Fed. Cir. 2007) (en banc).")).

times directed to the district court's legal conclusions.

Specifically, on the "central issue" in the case, Allcare's infringement claims, the majority considered only whether the Allcare's constructions for claims 52 and 102 were reasonable. (Pet.App.14a ("The key question with respect to claim 102 was whether the preamble . . . was a claim limitation and, if so, whether it required patient and employer interaction."); *id.* at 19a ("The district court's exceptional case finding with respect to claim 52 centered on Allcare's lack of basis for its claim construction position."). This Court has held that claim construction, at least where the construction is based solely on the intrinsic evidence of the patent itself, is an issue of law. *See Markman v. Westview Instruments*, 517 U.S. 370, 384 (1996) (stating that "construing the patent" is a "question of law"). Accordingly, the panel independently reviewed Allcare's claim-construction positions,[3] finding that its construction for claim 52 was reasonable (Pet.App.19a-22a), but that its construction for claim 102 was not (Pet.App.14a-16a). Even though it reviewed the claim-construction issues without

---

[3] The Federal Circuit is revisiting the issue of whether the appellate court should defer to any aspect of a district court's claim construction. *See Lighting Ballast Control LLC v. Philips Electronics North America Corp.*, 500 Fed. Appx. 951 (Fed. Cir. 2013) (order granting petition for *en banc* rehearing on the question of "Should this court afford deference to any aspect of a district court's claim construction?").

deference, with regard to the subjective prong of *Brooks*, the panel deferred to the district court, finding that it "did not clearly err in concluding that Allcare's claim 102 allegations were brought in subjective bad faith." (Pet.App.18a).

With regard to the three other bases for the district court's exceptional-case determination, the majority based its decision solely on undisputed facts and its independent consideration of the legal principles involved. First, the majority concluded that Allcare's assertion of *res judicata* and collateral estoppel was not frivolous because, at that time, the *law* was unsettled as to the viability of Allcare's theory and there was no dispute that Allcare promptly and voluntarily withdrew those assertions after learning additional facts tending to undermine them. (Pet.App.24a-26a.) Second, the majority reversed the district court's finding based on Allcare's allegedly "shifting claim construction" because "[t]he constructions proffered by Allcare [did] not differ in substance" (*id.* at 28a) and "Highmark itself conceded that new claim construction briefs in light of *Phillips* were desirable and would benefit the district court" (Pet.App.27a-29a). Again, the Panel's decision was based on a *legal* issue—the scope of proposed claim constructions and the effect of the *Phillips* decision—not a factual finding. Third, the Panel found that the district court erred as *a matter of law* in "sanctioning [Allcare] for conduct [occurring] before a different tribunal." (Pet.App.29a-31a).

As a result, the majority held that the district court's exceptional-case determination could be based on the assertion of claim 102, but not on "Allcare's other claims and actions" in this case. (Pet.App.at 31a). The majority therefore remanded the case to the district court so that it could determine the appropriate fee and cost award attributable to Allcare's assertion of claim 102.

10. The Denial of Highmark's Petition for Rehearing *En Banc*

Both parties petitioned for rehearing. Allcare petitioned for panel rehearing concerning the affirmance of the exceptional-case finding based on claim 102. Highmark petitioned for panel rehearing on the grounds that the majority allegedly "misperceived" the district court's claim construction and ignored the "law of the case" as well as the "full record" created in the district court. Highmark also petitioned for an *en banc* rehearing based on essentially the same arguments it raises in its petition to this Court.

The Federal Circuit denied both parties' petitions, but five judges dissented from the denial of Highmark's petition for rehearing *en banc*. (Pet.App.180a-181a). The dissenters argued that the majority departed from Federal Circuit precedent (Pet.App.191a-192a;205a-209a) and misapplied *PRE* (Pet.App.192a-195a). The dissenters also contended that the majority's decision was contrary to this Court's *Pierce* and *Cooter* decisions (Pet.App.195a-199a) and threatened to usurp the role of the district

court judge who, in their opinion, is in a better position than the appellate court to make the "objectively baseless" determination (Pet.App.200a-203a; 209a-210a).[4]

The panel majority responded to all of these criticisms. (Pet.App.182a-190a). Specifically, the majority discussed a number of cases from this Court, including *PRE*, that characterized "objective reasonableness" (or the related issue of "probable cause") as a legal question. (Pet.App.185a). In contrast, the majority observed, the dissenters failed to cite any case stating otherwise or any case stating that "a determination of probable cause for legal arguments is not subject to de novo review." (*Id.*)

The majority then addressed the dissenters' reliance on *Pierce* and *Cooter*, explaining that these cases were inapplicable for numerous reasons, including that, unlike the EAJA (which was at issue in *Pierce*) and Rule 11 (which was at issue in *Cooter*), Section 285 did not include an "open-ended discretionary standard." (Pet.App.186a). In fact, continued the majority, the discretionary language was eliminated in 1952 and replaced with language restricting a district court's discretion. (*Id.*). The majority also discussed significant differences in

---

[4] Circuit Judge Reyna, joined by three of the dissenters, criticized what he called "the majority's overstated reliance on developments in the willful infringement context" to address exceptional-case determinations pursuant to Section 285. (Pet.App.210a-214a; *see also supra* n.2).

policy considerations between Section 285 and the EAJA and Rule 11 (Pet.App.186a-187a), as well as significant differences between the sizes of the awards involved (Pet.App.187a-188a). The majority also discussed the different analyses between an "objective reasonableness" determination in a Section 285 case (which is based on the entire record of the litigation) and the test under Rule 11 (which is based on the facts as they were at a particular moment in time). (Pet.App.188a). These differences not only affect the nature of the inquiry (e.g., there is no factual dispute when the determination is based on the record created during the merits case), but also make the appellate court the better judge of whether a particular case or argument was "objectively baseless." (Pet.App.188a-189a). Directly responding to the dissenters' claim that a district court was better suited to make the determination, the majority finally observed that the Federal Circuit "sees far more patent cases than any district court, and is well positioned to recognize those 'exceptional' cases in which a litigant could not, under the law, have had a reasonable expectation of success." (Pet.App.189a-190a).

III. ARGUMENT

A. The Federal Circuit's Decision Is Consistent with this Court's Jurisprudence

1. This Court's Decisions Establish That "Objective Reasonableness" Is an Issue of Law Reviewed *De Novo*

In *PRE*, this Court unequivocally stated that where "there is no dispute over the predicate facts of the underlying legal proceeding, a court may decide probable cause as a matter of law." 508 U.S. at 63. This is consistent with earlier decisions from this Court, which similarly describe the issue as one of law. *See, e.g., Crescent City Live Stock Co. v. Butchers Union Slaughter–House Co.*, 120 U.S. 141, 149 (1887) ("when there is no dispute of fact, the question of probable cause is a question of law, for the determination of the court").

Because "objective baselessness" is an issue of law, the majority correctly reviewed the district court's conclusion on this issue without deference. Reviewing *legal* determinations *de novo* is what reviewing courts are supposed to do, even where the standard of review is otherwise deferential. *See, e.g., Koon*, 518 U.S. at 100 (stating that even though the abuse-of-discretion standard of review is deferential, "[a] district court by definition abuses its discretion when it makes an error of law."); *see also FilmTec*, 67 F.3d at 938 (stating that "the question of whether

or not a cause of action is reasonable or an abuse of process is a question of law" and that "[w]e review questions of law without deference to the trial forum."); *United States v. Legros*, 529 F.3d 470, 474 (2d Cir. 2008) ("The abuse-of-discretion standard incorporates *de novo* review of questions of law (including interpretation of the Guidelines) and clear-error review of questions of fact.").

Further compelling a *de novo* standard of review for "objectively baseless" determinations under Section 285 are the rights that are stake. As *PRE* explained, the "objectively baseless" standard is intended to protect the First Amendment right of access to the courts. Specifically, *PRE* required an objective test because a "purely subjective definition of 'sham' . . . would undermine, if not vitiate *Noerr*," which "shields from the Sherman Act a concerted effort to influence public officials regardless of intent or purpose." *PRE*, 508 U.S. at 58, 60. *See also California Motor Transport Co. v. Trucking Unlimited*, 404 U.S. 508, 513 (1972) (extending *Noerr's* protections to litigants and stating that "the right of access to the agencies and courts . . . is part of the right of petition protected by the First Amendment").

Cases in other areas of law emphasize the importance of independent appellate review where Constitutional rights are at risk. *See, e.g., Ornelas v. United States*, 517 U.S. 690, 699 (1996) ("We therefore hold that as a general matter determinations of reasonable suspicion and probable

cause should be reviewed *de novo* on appeal."); *Cooper Indus., Inc. v. Leatherman Tool Group, Inc.*, 532 U.S. 424, 436 (2001) ("courts of appeals should apply a *de novo* standard of review when passing on district courts' determinations of the constitutionality of punitive damages awards"); *Jacobellis v. Ohio*, 378 U.S. 184, 189 (1964) ("In other areas involving constitutional rights under the Due Process Clause, the Court has consistently recognized its duty to apply the applicable rules of law upon the basis of an independent review of the facts of each case"); *Bose Corp. v. Consumers Union of United States, Inc.*, 466 U.S. 485, 508 n.27 (1984) ("The simple fact is that *First Amendment* questions of 'constitutional fact' compel this Court's *de novo* review."); *Miller v. Fenton*, 474 U.S. 104, 115 (1985) ("we think that it would be inappropriate to abandon the Court's longstanding position that the ultimate question of the admissibility of a confession merits treatment as a legal inquiry requiring plenary federal review").

2. This Court's Cases Cited by Highmark as Being in Conflict with the Decision Below Do Not Involve Constitutional Rights

Highmark argues that the decision below conflicts with *Pierce v. Underwood*, 487 U.S. 552 (1988) and *Cooter & Gell v. Hartmarx Corp.*, 496 U.S. 384 (1990) (Petition at 14-19), but it does not. Most significantly, those decisions do not involve the same Constitutional concerns that are at stake in

cases subject to *PRE's* "objectively reasonable" test. *Peirce*, for instance, involves the standard of review for awards of fees and costs against the Government, so there are no Constitutional rights at risk at all.

And, although there is some overlap in the kinds of misconduct addressed by Rule 11 and Section 285 (for instance, both cover litigation misconduct), there is rarely, if ever, the kind of Constitutional concerns at work in Rule 11 cases as there are in cases involving allegedly "objectively baseless" claims under Section 285. Most significantly, Rule 11 sanctions generally do not implicate the First Amendment right of access to the courts. Indeed, the *Cooter* court recognized that "[e]ven if a district court indicated that a complaint was not legally tenable or factually well founded for Rule 11 purposes, the resulting Rule 11 sanction would nevertheless not preclude the refiling of a complaint."). *Cooter*, 496 U.S. at 396.

The majority also identified other significant differences between Section 285 cases and *Pierce* and *Cooter*. For instance, the majority noted that while the EAJA and Rule 11 describe the award as discretionary, the discretionary language that had been in Section 285 was deleted by the 1952 Patent Act. (Pet.App.186a). Additionally, the purposes of Rule 11 (to deter litigation abuses) and the EAJA ("eliminat[ing] for the average person the financial disincentive to challenge unreasonable government actions") are different from the primarily compensatory purpose of Section 285.

(Pet.App.186a). Another significant difference is the amount of money involved. The majority listed a series of cases where the fees and costs awarded in Section 285 cases were many millions of dollars. (Pet.App.187a). In contrast, Rule 11 sanctions are usually much more modest (here, certainly, the $5,000,000 Section 285 award dwarfed the $35,000 Rule 11 sanctions) and this Court reasoned that if a typical EAJA award exceeded $1,000,000 (as Section 285 awards do) then "one might expect it to be reviewed more intensively." *Pierce*, 487 U.S. at 563. Finally, unlike Rule 11 sanctions, which are directed to a specific point in time, Section 285 awards are based on the entire litigation, which in patent cases usually involves an appeal if it is litigated to judgment in the district court. (Pet.App.188a-189a). This not only changes the fundamental nature of the inquiry, but also makes the Federal Circuit a better arbiter of the "objective reasonableness" of a party's position (let alone the fact that the Federal Circuit judges see far more patent cases every year than any individual district court judge). (*Id.*).

In addition to these reasons, Allcare can add one more. In defending the district court's sanctions, Highmark convinced the panel that the evidence that caused the district court to withdraw its Rule 11 sanctions against counsel had no bearing on the district court's findings against Allcare under Section 285. Red Brief at 64 ("As this Court has held, '[m]otions under Rule 11 and § 285 are different,' and, for that reason, '[a] case interpreting Rule 11 . . . is inapposite' to interpretation under §285.").

Highmark cannot legitimately argue to the panel that it should not look to Rule 11 cases to decide a case under Section 285, and then argue exactly the opposite to this Court.

3. The Decision Below Does Not Conflict with Fed. R. Civ. P. 52

Highmark also alleges that the decision below conflicts with Federal Rule of Civil Procedure 52(a)(6), which provides for "clearly erroneous" review of a district court's factual findings. Petition at 19-20. But as noted above (*supra* page 27), the majority did not overturn a single *factual* finding made by the district court. To the contrary, the facts were either undisputed or, in the specific context of *PRE's subjective* test, affirmed. (Pet.App.18a). The Federal Circuit's *de novo* review of the district court's *legal* conclusion of "objective baselessness," moreover, was entirely consistent with Rule 52. *See, e.g., Bose*, 466 U.S. at 501 ("Rule 52(a) does not inhibit an appellate court's power to correct errors of law, including those that may infect a so-called mixed finding of law and fact, or a finding of fact that is predicated on a misunderstanding of the governing rule of law.").

4. The Decision Below Is Not in Conflict with Earlier Federal Circuit or Other Circuit Decisions

Highmark also alleges that the majority's decision conflicts with earlier Federal Circuit cases and cases from other circuits, which state that awards under Section 285 are to be reviewed under the abuse-of-discretion standard. But as the majority explained, even they do not dispute that a Section 285 award is committed to a district court's discretion. (Pet.App.183a).

That is not the issue in this appeal. Instead, the issue in this appeal is what level of deference should the reviewing court give to the lower court's *legal* conclusion of "objective baselessness"? And, as shown above, *every* circuit court, following this Court's lead, generally reviews a lower court's *legal* conclusions without deference.[5] *See supra* pages 33-34.

Furthermore, cases from the Federal Circuit and its sister circuits are entirely consistent with the decision below. For instance, the Federal Circuit in *FilmTec Corp. v. Hydranautics* held as early as 1995 that a district court's conclusion of "objective baselessness" is to be reviewed *de novo*.

---

[5] None of the cases cited by Highmark states that an "objectively baseless" determination should be reviewed with deference.

> The facts of this case have been established by prior litigations, and are therefore law of the case. Because there is no dispute over the facts, the question of whether or not a cause of action is reasonable or an abuse of process is a question of law. . . . We review questions of law without deference to the trial forum.

67 F.3d at 938.

In other areas of law where the *legal* justifications for a party's actions must be considered, other circuit courts treat the issue of the party's reasonableness as one of law that is reviewed without deference. For instance, in determining the issue of qualified immunity, courts must consider "whether an objectively reasonable officer would have believed his conduct to be lawful, in light of clearly established law," which "is a question of law that must be resolved by the court, not the jury" *See, e.g., Pitt v. District of Columbia*, 491 F3d 494, 509-510 (D.C. Cir. 2007). Likewise, in considering whether searches and seizures were legally justified, the other circuits review *de novo* the issue of whether the person challenging the officer's actions had a reasonable expectation of privacy. *See, e.g., United States v. Nerber*, 222 F.3d 597, 599 (9th Cir. 2000) ("Whether a citizen's expectation of privacy was objectively reasonable is a question of law reviewed de novo."); *United States v. Garzon*, 119 F.3d 1446, 1449 (10th Cir. 1997) ("a determination of

whether the defendant retained an objectively reasonable expectation of privacy in the property that society will recognize is a question of law that we review *de novo*").

5. The Policy Arguments Presented by Highmark and Blue Cross Are Inadequate

Finally, Highmark and the Blue Cross Blue Shield Association (as amicus), allege that the decision below will make it more difficult for a district court to sanction "patent assertion entities" or, pejoratively, "patent trolls." Petition at 2-4,13-14,26-28; Brief of Blue Cross Blue Shield Association at 6-8,9-12.

Putting aside Highmark's and Blue Cross's condemnations,[6] the standard of review has nothing

---

[6] Allcare, of course, disputes the "troll" label. In fact, Allcare is what Blue Cross would call a "good" NPE: "small businessmen trying to monetize inventions remaining from failed business ventures." Blue Cross Br. at 12; (A22863;A2441-42;A2778-80). Certainly, Allcare's licensing activities (*see supra* at 9-12) bear no resemblance to the abuses that have garnered so much attention from the public, academia, Congress, and the Administration. *See infra* notes 7 and 8. For instance, Allcare did not indiscriminately sue companies in the relevant field (in this case, healthcare companies) or their customers, nor can it be said that it tried to avoid testing the legitimacy of its assertions by forcing early "settlement, before reaching litigation on the merits . . . ." Blue Cross Br. at 6. To the contrary, Allcare litigated its patent through summary

to do with proving objective baselessness in district courts. Indeed, a recent Federal Circuit decision shows that the standard of review cuts both ways, and where the undisputed facts show that a plaintiff's position is "objectively baseless," the Federal Circuit will reverse a district court that concludes otherwise. *See Raylon, LLC v. Complus Data Innovations, Inc.*, 700 F.3d 1361 (Fed. Cir. 2012) (reversing the district court's finding that case was not exceptional under Section 285).

In any event, there are numerous bills pending in Congress that address "patent assertion entities" to one degree or another[7] and the Administration has also recently shown interest in the issue.[8] These are much preferable vehicles for effecting the policy changes that Highmark and Blue Cross seek.

---

judgment, *twice*, once successfully (in *Trigon*) and once unsuccessfully (here).

[7] *See* "Saving High-Tech Innovators from Egregious Legal Disputes Act" (H.R. 845); "Patent Quality Improvement Act" (S. 866); "End Anonymous Patents Act" (H.R. 2024); "Patent Abuse Reduction Act" (S. 1013).

[8] http://www.whitehouse.gov/the-press-office/2013/06/04/fact-sheet-white-house-task-force-high-tech-patent-issues.

IV. CONCLUSION

For the foregoing reasons, Allcare respectfully requests that this Court deny Highmark's petition.

Respectfully submitted,

Of Counsel:
ERIK R. PUKNYS
FINNEGAN, HENDERSON, FARABOW, GARRETT & DUNNER, LLP
3300 Hillview Avenue
Palo Alto, CA 94304-1203
(650) 849-6600

DONALD R. DUNNER
Counsel of Record
FINNEGAN, HENDERSON, FARABOW, GARRETT & DUNNER, LLP
901 New York Avenue, NW
Washington, DC 20001-4413
(202) 408-4000

Counsel for Respondent, Allcare Health Management System, Inc.

June 13, 2013

REPLY BRIEF

RECORD
AND
BRIEFS

Supreme Court, U.S.
FILED
JUN 25 2013
OFFICE OF THE CLERK

No. 12-1163

IN THE
Supreme Court of the United States

HIGHMARK INC.,

Petitioner,

v.

ALLCARE HEALTH MANAGEMENT SYSTEMS, INC.,

Respondent.

On Petition for a Writ of Certiorari to the United States Court of Appeals for the Federal Circuit

REPLY BRIEF FOR PETITIONER

CYNTHIA E. KERNICK
JAMES C. MARTIN
KIM M. WATTERSON
KEVIN S. KATONA
THOMAS M. POHL
REED SMITH LLP
225 Fifth Avenue
Pittsburgh, PA 15222
(412) 288-3131

NEAL KUMAR KATYAL*
DOMINIC F. PERELLA
HOGAN LOVELLS US LLP
555 13th Street, N.W.
Washington, D.C. 20004
(202) 637-5528
neal.katyal@hoganlovells.com

Counsel for Petitioner
**Counsel of Record*

WILSON-EPES PRINTING CO., INC. – (202) 789-0096 – WASHINGTON, D. C. 20002

TABLE OF CONTENTS

INTRODUCTION 1

ARGUMENT 4

I. THIS COURT'S CASES REFUTE RESPONDENT'S ARGUMENT ON THE MERITS 4

II. RESPONDENT'S ATTEMPTS TO DISTINGUISH *COOTER* AND *PIERCE* FAIL 6

III. THE DECISION BELOW CONFLICTS BOTH WITH FEDERAL CIRCUIT PRECEDENT AND DECISIONS OF OTHER COURTS OF APPEALS 8

IV. THE IMPORTANCE OF THE QUESTION PRESENTED FAVORS REVIEW 10

CONCLUSION 12

TABLE OF AUTHORITIES

Page

ASES:

Bill Johnson's Rests., Inc. v. *NLRB*,
461 U.S. 731 (1983). 3, 6

Brooks Furniture Mfg., Inc. v.
Dutailier Int'l, Inc.,
393 F.3d 1378 (Fed. Cir. 2005) 3, 8

California Motor Transp. Co. v. *Trucking Unlimited*, 404 U.S. 508 (1972) 6

Checkpoint Sys., Inc. v. *All-Tag Sec. S.A.*,
711 F.3d 1341 (Fed. Cir. 2013) 10

Cooter & Gell v. *Hartmax Corp.*,
496 U.S. 384 (1990) ..... *passim*

FilmTec Corp. v. *Hydranautics*,
67 F.3d 931 (Fed. Cir. 1995) 9

Hoge Warren Zimmerman Co. v. *Nourse & Co.*, 293 F.2d 779 (6th Cir. 1961) 7

Pierce v. *Underwood*,
487 U.S. 552 (1987) ..... *passim*

Precision Links Inc. v. *USA Prods. Grp., Inc.*,
2013 WL 2450630
(Fed. Cir. June 4, 2013) 10

Professional Real Estate Investors, Inc. v.
Columbia Pictures Indus., Inc.,
508 U.S. 49 (1993) 4, 5, 6

Salve Regina College v. *Russell*,
499 U.S. 225 (1991) 2

Zadvydas v. *Davis*,
533 U.S. 678 (2001) 7

TABLE OF AUTHORITIES—Continued

Page

CONSTITUTION:

U.S. Const. amend. I 2, 3, 6, 7

STATUTES:

15 U.S.C. § 1117(a)(3) 9

35 U.S.C. § 285 ..... *passim*

RULES:

Fed. R. Civ. P. 11 ..... 6, 7, 8

OTHER AUTHORITIES:

R. Rader *et al.*, Op-Ed., *Make Patent Trolls Pay in Court*, N.Y. Times, June 4, 2013 10

IN THE

Supreme Court of the United States

No. 12-1163

HIGHMARK INC.,

Petitioner,

v.

ALLCARE HEALTH MANAGEMENT SYSTEMS, INC.,

Respondent.

On Petition for a Writ of Certiorari to the United States Court of Appeals for the Federal Circuit

REPLY BRIEF FOR PETITIONER

INTRODUCTION

The petition explained that it was impossible for the Federal Circuit to have fractured the law any more: Its 6-5 decision not only flouted this Court's cases, it also split with decisions from *every* other circuit on an important statutory provision. Faced with that overwhelming case for *certiorari*, Respondent's brief in opposition spends its time insisting that the Federal Circuit got it right on the merits. That argument would not ward off *certiorari* even if it were correct. But it is not correct. The Federal Circuit has gone astray. Review is required to stop its aberrant approach from neutering a statute crucial to the administration of patent law.

Respondent's defense of the Federal Circuit can be summarized in a syllogism: issues of law are re-

viewed *de novo*; objective baselessness is an issue of law; therefore, objective baselessness should be reviewed *de novo*. Both premises and the conclusion are wrong. As for the first premise: This Court has squarely held that even a "purely legal" issue should be reviewed deferentially in the attorney-fee context. *Pierce* v. *Underwood*, 487 U.S. 552, 560 (1988); *Cooter & Gell* v. *Hartmax Corp.*, 496 U.S. 384, 402 (1990). And the second premise: The objective baselessness inquiry is about "what constitutes reasonable conduct under varying circumstances"—a "quintessentially factual inquiry." Pet. App. 35a (Mayer, J., dissenting). At most, as even the panel acknowledged, it is "based on mixed questions of law and fact." Pet. App. 9a. And "deferential review of mixed questions of law and fact is warranted when it appears that the district court is 'better positioned' than the appellate court to decide the issue in question." *Salve Regina Coll.* v. *Russell*, 499 U.S. 225, 233 (1991). The district court is "better positioned" here. *See Cooter*, 496 U.S. at 399-405; *Pierce*, 487 U.S. at 557-63. Indeed, this case is a perfect illustration of why deference is warranted. A district court, intimately familiar with the whole litigation, concluded that Respondent's conduct was so egregious that it gave "the term 'patent troll' its negative connotation." Pet. App. 69a. Yet its lengthy study and evaluation of the way the case was litigated received no deference at all.

Respondent does briefly turn from the merits to the actual question at hand, but its passing attempts to reconcile the Federal Circuit's decision with other authority fail. Its lead strategy for distinguishing *Cooter* and *Pierce* is to invoke the specter of "[c]onstitutional concerns," specifically the "First

Amendment right of access to the courts." Opp. 33-35. Those concerns dissolve under even minimal scrutiny. As much as Respondent would like to shoehorn this type of litigation within the protective embrace of the First Amendment, "baseless litigation is not immunized by the First Amendment right to petition." *Bill Johnson's Rests., Inc.* v. *NLRB*, 461 U.S. 731, 743 (1983).

As for the circuit splits: Respondent does not even try to dispute the divergence between the Federal Circuit's approach here and that taken by eleven circuits in implementing the identical fee-shifting provision of the Lanham Act. And the best Respondent can muster against the fact that *every* circuit reviewed exceptional-case findings deferentially before the Federal Circuit was created is that none specifically held that "objective baselessness" should be reviewed deferentially. That is unsurprising: That nomenclature was not used by the Federal Circuit until 2005. *Brooks Furniture Mfg.* v. *Dutailier Int'l, Inc.*, 393 F.3d 1378, 1381 (2005).

Finally, rather than dispute the importance of fee-shifting to modern patent litigation, Respondent suggests that this Court should wait on the sidelines for Congress to act. But the bills referenced by Respondent are all in extremely preliminary phases—none has even made it out of committee—and they deal with issues tangential to the question presented. This Court should act to restore vitality to the fee-shifting statute Congress has already passed: Section 285. The pending bills should not deter review.[1]

---

[1] The bulk of the brief in opposition is devoted to a prolix retelling of the procedural history of the case. It is replete with

ARGUMENT

I. THIS COURT'S CASES REFUTE RESPONDENT'S ARGUMENT ON THE MERITS.

Respondent's first argument is that because objective baselessness is a "legal determination," the Federal Circuit must review it *de novo*. That is directly contrary to this Court's decisions in *Pierce* and *Cooter*. *Pierce* held that even a "purely legal issue" should be reviewed deferentially in the attorney-fee context. 487 U.S. at 560-61. Similarly, in *Cooter*, the precise question before the Court was "whether the court of appeals must defer to the district court's *legal conclusions* in Rule 11 proceedings." 496 U.S. at 401 (emphasis added). The Court answered yes. *Id.* at 405. The fact that something is in some sense a "legal" question does not lead inexorably to *de novo* review.

Respondent relies solely on *Professional Real Estate Investors, Inc.* v. *Columbia Pictures Industries, Inc.* (*"PRE"*), 508 U.S. 49 (1993), to show both that objective baselessness is a legal question and that it should be reviewed *de novo*. But *PRE* only held that "probable cause" to institute legal proceedings is a question of law when "there is no dispute over the predicate facts of the underlying proceeding." *Id.* at 63. Here, the "predicate facts"—the characteristics of Highmark's system, the adequacy of the pre-filing investigation, the background of the patent, and

---

misrepresentations, which are not addressed here because they are irrelevant to the propriety of *certiorari*. The discussion of *Trigon* is particularly ironic, however, given that Respondent's continual reliance on *Trigon* in district court, without ever adequately investigating or explaining the relationship between the accused system in *Trigon* and Highmark's system, was one reason the court found the case exceptional. Pet. App. 63a.

whether or not there was infringement—were vigorously contested. *See* Pet. 6-8; Opp. 7-24. Indeed, Respondent's first appeal was predicated on challenging the district court's view of the facts. *See* No. 09-1065, Appellant Br. (Fed. Cir. Jan. 12, 2009). Thus the statement in *PRE* is by its own terms inapplicable.

Moreover, when *PRE* called "probable cause" a "matter of law," it meant that in a specific and limited sense: It is an issue for the court rather than the jury to decide. *PRE* did not speak to the appropriate standard of review. By contrast, both *Pierce* and *Cooter* make clear that when a "legal determination" is "rooted in factual determinations," so that the district court is "better situated than the court of appeals to marshal the pertinent facts and apply the fact-dependent legal standard," the appellate court "must defer." *Cooter*, 496 U.S. at 401-402, 405.

Respondent also erroneously suggests that the standard of review makes no difference: Because the reasonableness of an allegation is a matter of law and a "district court by definition abuses its discretion when it makes an error of law," it argues, review would effectively be *de novo* even under an abuse-of-discretion standard. Opp. 3. Once again, Respondent's premise is wrong. Objective reasonableness is not a pure issue of law. It is a mixed question of law and fact that examines not merely claim construction but infringement as well, over the course of a potentially long litigation. Pet. App. 9a, 188a. And a district court's application of a correctly stated, "fact-dependent legal standard" is entitled to deference. Otherwise *Cooter* itself would be meaningless. After all, it specifically calls for deference to "legal conclusions." 496 U.S. at 401.

II. RESPONDENT'S ATTEMPTS TO DISTINGUISH *COOTER* AND *PIERCE* FAIL.

1. Respondent's primary argument against the application of *Cooter* and *Pierce* is that they "do not involve the same Constitutional concerns that are at stake in cases subject to *PRE*'s 'objectively reasonable' test." Opp. 34-35. This argument lacks merit for two reasons.

To begin with, this case presents no constitutional concern whatever. In *PRE*, the Court recognized that a litigant could be subjected to criminal and civil liability (with treble damages) under the federal antitrust laws for the simple act of bringing a lawsuit. The Court thus formulated its definition of "sham" litigation with "the First Amendment right to petition" in the background. *PRE*, 508 U.S. at 56. This case, by contrast, involves fee awards for baseless litigation. And this Court has settled, in no uncertain terms, that "baseless litigation is not immunized by the First Amendment right to petition." *Bill Johnson's Restaurants*, 461 U.S. at 743. That is so because the right of access to courts operates "within the limits * * * of their proper procedures," and "unethical conduct in the setting of the adjudicatory process often results in sanctions." *California Motor Transport Co.* v. *Trucking Unlimited*, 404 U.S. 508, 512, 515 (1972). Section 285 is just the sort of procedural regulation that does not implicate the First Amendment right of access at all. It is therefore unsurprising that Respondent has not cited a single case to the contrary, in the context of Section 285 or any other attorneys'-fee statute.

Second, even if there were some First Amendment issue, that would not distinguish *Cooter*. Rule 11 empowers a court to sanction an "attorney" or "party"

for filing a frivolous motion or pleading. Thus both Rule 11 and Section 285 have the same practical effect—to dissuade the filing of baseless suits—and create the same alleged tension with the right of access, were that concern not so clearly foreclosed.

2. Respondent's other attempts to distinguish *Cooter* and *Pierce* fare no better. Respondent contends that "unlike Rule 11 sanctions, which are directed to a specific point in time, Section 285 awards are based on the entire litigation." Opp. 36. That is true, but it hardly helps Respondent: The fact that Section 285 determinations require a comprehensive look at the entire course of a case—often spanning a decade, like this one—militates in *favor* of deference. It would be impossible for an appellate judge to acquire the same level of familiarity with the "entire litigation" as a district judge who has lived with it. Even if it were, that "acquisition" would come "at unusual expense," and would not be a worthwhile "investment of appellate energy." *Cooter*, 487 U.S. at 552, 561.

Respondent also claims that "the EAJA and Rule 11 describe the award as discretionary," whereas the "discretionary language" in Section 285 was removed by the 1952 revision to the Patent Act. Opp. 35. That is plainly wrong. Section 285 still provides that a court "*may* award" fees, and "'may' suggests discretion." *Zadvydas* v. *Davis*, 533 U.S. 678, 697 (2001). That is why courts have consistently recognized that the 1952 amendment did "not do[] away with the discretionary feature." *Hoge Warren Zimmerman Co.* v. *Nourse & Co.*, 293 F.2d 779, 783 (6th Cir. 1961).

Finally, Respondent claims that it is "significant" that Section 285 awards tend to be larger than Rule

11 sanctions. Putting aside the fact that sanctions inflict tremendous reputational harm, *Cooter* was grounded in the fact that "the district court is better situated than the court of appeals to marshal the pertinent facts and apply the fact-dependent legal standard." 496 U.S. at 402. The premise of *Cooter* is that the best decision-maker will make the best decision, a fact that does not vary with the amount in controversy. And the best decision-maker, in both the Rule 11 and Section 285 contexts, is the district court. The fact that awards are larger under Section 285 only *increases* the importance of ensuring that the decision is made well.

III. THE DECISION BELOW CONFLICTS BOTH WITH FEDERAL CIRCUIT PRECEDENT AND DECISIONS OF OTHER COURTS OF APPEALS.

1. Before the consolidation of patent appeals in the Federal Circuit, every circuit concluded that a district court's exceptional-case finding under the Patent Act should be reviewed deferentially. Pet. 25. Respondent's only retort to that clear split is that "[n]one of the cases cited by Highmark states that an 'objectively baseless' determination should be reviewed with deference." Opp. 38 n.5. Of course none does: The Federal Circuit did not begin using the "objective baselessness" nomenclature for exceptional case findings until 2005, *see Brooks*, 393 F.3d at 1381, well after the other circuits had their opportunity to consider the standard of review. But that does not make it any less of a split. The bottom line is that the Federal Circuit interposes *de novo* review of Section 285 fee awards, whereas every other circuit had deferentially reviewed each aspect of such awards. On that critical divergence Respondent has nothing to say. And it is precisely the novel use of *de*

novo review that fractured the Federal Circuit 6-5. *See* Pet. App. 191a. (decision below is "squarely at odds with the highly deferential review adopted by every other regional circuit" in analogous contexts).

2. The Lanham Act, just like the Patent Act, provides for attorneys' fees in "exceptional cases." 15 U.S.C. § 1117(a)(3). And the circuits agree—with one outlier—that a district court's exceptional-case finding in that context should be reviewed deferentially. Pet. 24. Respondent does not even discuss, let alone distinguish, those decisions—an apparent concession that the split, and damage to the fabric of the law in this area, is irreconcilable.

3. The petition pointed to an unbroken line of Federal Circuit cases deferring to district courts' judgments about objective baselessness in the exceptional-case context. Pet. 22. In response, Respondent cites a single case from 1995 that supposedly shows that "objective baselessness is to be reviewed *de novo*." Opp. 38-39 (citing *FilmTec Corp.* v. *Hydronautics*, 67 F.3d 931 (Fed. Cir. 1995)). That case is inapposite. First, *FilmTec* was not about fee-shifting at all; it was, like *PRE*, about the sham exception to antitrust immunity. Therefore it was not controlled by *Cooter* and *Pierce*, and the many factors favoring deference here were not present. Second, in *FilmTec* the facts informing the objective baselessness analysis were "established by prior litigations" and "therefore the law of the case." 67 F.3d at 938. Thus the facts were not only undisputed, but the presumption of district court familiarity with the facts was weakened. *FilmTec* in no way contradicts the Federal Circuit's consistent practice of deferring to district courts' judgments in the attorneys' fee context.

IV. THE IMPORTANCE OF THE QUESTION PRESENTED FAVORS REVIEW.

Respondent does not dispute any of the features of modern patent litigation that support the case for *certiorari*: that suits by trolls are now a majority of all patent suits filed in the United States; that these suits have a startlingly low success rate; that the troll problem is exacerbated by the escalating cost of patent litigation; or that fee-shifting under Section 285 can be an effective mechanism to address these problems. Pet. 27-28; *see also* BCBSA Amicus Br. 9-12. Indeed, this month Chief Judge Rader (one of the dissenters in this case) penned an editorial in the *New York Times* urging trial judges to exercise their Section 285 authority more aggressively to "make trolls pay for abusive litigation." R. Rader *et al.*, *Make Patent Trolls Pay in Court*, N.Y. Times, June 4, 2013, at A25. "Section 285 of the Patent Act," he explains, "give[s] judges the authority they need to shift the cost burden of litigation abuse from the defendant to the troll." *Id.*

That will be harder after this case. As the dissenters recognized, the effect of the decision below is to "tie[ ] the trial court's hand," Pet. App. 213a, and to make it even less likely for abused defendants to recoup their costs. Cases subsequent to *Highmark* have borne that out: In just a few months, the Federal Circuit has vacated both fee awards it has reviewed. *Precision Links Inc.* v. *USA Products Grp., Inc.*, 2013 WL 2450630 (2013); *Checkpoint Sys., Inc.* v. *All-Tag Sec. S.A.*, 711 F.3d 1341 (2013). The decision below has weakened the deterrent effect of Section 285.

Respondent counters that the Court should not worry because the Federal Circuit may exercise its

de novo review to *award* fees, rather than reverse them. That argument ignores how the standard will operate in practice. A skillful appellate lawyer will now be able to dream up some remotely colorable argument to have a fee award vacated, even if that argument was not made to the district judge. One who has been *denied* fees, however, must attempt to prove a negative: that there are no colorable arguments at all in support of a claim. That will only be possible in the most unusual and egregious cases. BCBSA Amicus Br. 16.

2. Respondent also points to "numerous bills pending in Congress" as reasons to deny *certiorari*. Opp. 41. But these bills are at best tangential to the issues at hand. The Patent Quality Improvement Act (S. 866) deals with when parties can petition the Patent and Trademark Office (PTO) to review a grant of a business method patent. The End Anonymous Patents Act (H.R. 2024) would require any sales or transfers of patents to be disclosed to the PTO. The Patent Abuse Reduction Act (S. 1013) would, among other things, modify the substantive standard governing when fees should be awarded, but not otherwise affect the standard of review. Similarly, the SHIELD Act (H.R. 845) would make an award of attorneys' fees against patent trolls the norm unless "exceptional circumstances" make it unjust. But this does not affect the standard of review, and only applies to a subset of patent litigants. The question presented by this case, by contrast, is germane to every patent suit, regardless of the parties.

Not only are these bills irrelevant to the basic issue in this case, they are in very preliminary phases; none has even been voted out of committee. They

should not detain this Court. Congress already has empowered district judges with a vital tool to address abuse of the patent system: the award of attorneys' fees in exceptional cases. But the decision below has "tie[d] the trial court's hand," Pet. App. 213a, while disregarding this Court's precedent and the unanimous views of other circuits.

CONCLUSION

For the foregoing reasons, and those in the petition, the petition should be granted.

Respectfully submitted,

CYNTHIA E. KERNICK
JAMES C. MARTIN
KIM M. WATTERSON
KEVIN S. KATONA
THOMAS M. POHL
REED SMITH LLP
225 Fifth Avenue
Pittsburgh, PA 15222
(412) 288-3131

NEAL KUMAR KATYAL*
DOMINIC F. PERELLA
HOGAN LOVELLS US LLP
555 13th Street, N.W.
Washington, D.C. 20004
(202) 637-5528
neal.katyal@hoganlovells.com

Counsel for Petitioner
**Counsel of Record*

June 2013

AMICUS CURIAE BRIEF

RECORD AND BRIEFS

Supreme Court, U.S.
FILED
APR 24 2013
OFFICE OF THE CLERK

No. 12-1163

IN THE

Supreme Court of the United States

HIGHMARK INC.,

Petitioner,

v.

ALLCARE HEALTH MANAGEMENT SYSTEMS, INC.,

Respondent.

ON PETITION FOR A WRIT OF CERTIORARI TO THE UNITED STATES COURT OF APPEALS FOR THE FEDERAL CIRCUIT

BRIEF OF BLUE CROSS BLUE SHIELD ASSOCIATION AS AMICUS CURIAE IN SUPPORT OF PETITIONER

ROGER G. WILSON
Senior Vice President, General Counsel and Corporate Secretary
BLUECROSS BLUESHIELD ASSOCIATION
225 N. Michigan Avenue
Chicago, IL 60601
(312) 297-6439

BRIAN H. PANDYA
Counsel of Record
JAMES H. WALLACE, JR.
JOHN B. WYSS
MICHAEL L. STURM
THOMAS R. MCCARTHY
WILEY REIN LLP
1776 K Street, NW
Washington, D.C. 20006
(202) 719-7000
bpandya@wileyrein.com

Counsel For Amicus Curiae

April 24, 2013

247198

COUNSEL PRESS
(800) 274-3321 • (800) 359-6859

Library of Congress
Law Library

TABLE OF CONTENTS

Page

TABLE OF CONTENTS i

TABLE OF CITED AUTHORITIES iii

INTEREST OF *AMICUS CURIAE* 1

INTRODUCTION AND SUMMARY OF THE ARGUMENT 2

ARGUMENT 9

I. THE RAPIDLY INCREASING AMOUNT AND EXPENSE OF PATENT LITIGATION HIGHLIGHTS THE IMPORTANCE OF SECTION 285'S ROLE IN REGULATING THE QUALITY OF PATENT SUITS 9

A. Patent Lawsuits, Which Routinely Cost Millions Of Dollars To Litigate, Have Nearly Doubled In The Last Five Years 9

B. The Panel Majority's Decision Ignores That Section 285 Awards Are Inherently Fact Intensive And Thus Properly Left To District Courts 13

C. Taking Discretion Away From District Courts Weakens Section 285's Deterrent Effects 15

Table of Contents

Page

II. THE PANEL MAJORITY'S DECISION TO REVIEW SECTION 285 AWARDS *DE NOVO* USURPS DISCRETION THIS COURT HAS TRADITIONALLY GIVEN TRIAL COURTS 18

A. Under This Court's Precedents, Attorney's Fees Awards Are Reviewed For Abuse Of Discretion 18

B. Section 285 Awards Are Mixed Questions Of Law And Fact, Which This Court Has Held In Similar Circumstances Are Subject To Review For Clear Error.....20

III. THE PANEL MAJORITY'S INTERPRETATION OF "EXCEPTIONAL CASE" IN SECTION 285 CONFLICTS WITH OTHER CIRCUITS THAT HAVE INTERPRETED THE PHRASE IN SIMILAR STATUTES 22

CONCLUSION 25

TABLE OF CITED AUTHORITIES

Page

CASES

Anderson v. City of Bessemer City,
470 U.S. 564 (1985) 16

Berkla v. Corel Corp.,
302 F.3d 909 (9th Cir. 2002) 18

Brooks Furniture Mfg., Inc. v. Dutailier Int'l, Inc.,
393 F.3d 1378 (Fed. Cir. 2005) 20

Brown v. Plata,
131 S. Ct. 1910 (2011) 21

Checkpoint Systems, Inc. v. All-Tag Security S.A.,
2012-1085 (Fed. Cir. Mar. 25, 2013) 17

Classic Media, Inc. v. Mewborn,
532 F.3d 978 (9th Cir. 2008) 24

Cooter & Gell v. Hartmarx Corp.,
496 U.S. 384 (1990) 18

Cybor Corp. v. FAS Technologies, Inc.,
138 F.3d 1448 (Fed. Cir. 1998) 21

DuBuit v. Harwell Enterprises, Inc.,
540 F.2d 690 (4th Cir. 1976) 23

Eon-Net LP v. Flagstar Bancorp,
653 F.3d 1314 (Fed. Cir. 2011) 19

Cited Authorities

Page

F.D. Rich Co. v. United States ex rel. Industrial Lumber Co., 417 U.S. 116 (1974) 18

First National Bank in Sioux Falls v. First National Bank South Dakota, 679 F.3d 763 (8th Cir. 2012) 19, 24

Freytag v. Commissoner of Internal Revenue, 501 U.S. 868 (1991) 16

Goodheart Clothing Co. v. Laura Goodman Enterprises, Inc., 962 F.2d 268 (2d Cir. 1992) 23-24

Hoge Warren Zimmerman Co. v. Nourse & Co., 293 F.2d 779 (6th Cir. 1961) 22

Ji v. Bose Corp., 626 F.3d 116 (1st Cir. 2010) 23

Lilly v. Virginia, 527 U.S. 116 (1999) 21

Lipscher v. LRP Publications, Inc., 266 F.3d 1305 (11th Cir. 2001) 24

Microsoft Corp. v. i4i Limited Partnership, 131 S. Ct. 2238 (2011) 12

Cited Authorities

Page

Miller v. Fenton,
474 U.S. 104 (1985) 21

National Business Forms & Printing, Inc. v. Ford Motor Co.,
671 F.3d 526 (5th Cir. 2012) 24

Newman v. Piggie Park Enterprises, Inc.,
390 U.S. 400 (1968) 18

Newport News Holdings Corp. v. Virtual City Vision, Inc.,
650 F.3d 423 (4th Cir. 2011) 24

Pierce v. Underwood,
487 U.S. 552 (1988) 18

Salve Regina Coll. v. Russell,
499 U.S. 225 (1991) 21

Securacomm Consulting, Inc. v. Securacom Inc.,
224 F.3d 273 (3d Cir. 2000) 24

Talon, Inc. v. Union Slide Fastener, Inc.,
266 F.2d 731 (9th Cir. 1959) 22-23

STATUTES

7 U.S.C. § 2565 23

15 U.S.C. § 1117 23

Page

17 U.S.C. § 505 23

35 U.S.C. § 285 ..... *passim*

Sup. Ct. R. 37 1

OTHER AUTHORITIES

American Intellectual Property Law Association, *2011 Report of the Economic Survey* (2012) 6, 10, 11

Brian T. Yeh, Cong. Research Serv., R42668, *An Overview of the "Patent Trolls" Debate* (2012) 6

David L. Schwartz, *Practice Makes Perfect? An Empirical Study of Claim Construction Reversal Rates in Patent Cases*, 107 Mich. L. Rev. 223 (2008) 17

James Beesen & Michael J. Meurer, *The Direct Costs from NPE Disputes* (Bos. Univ. Sch. of Law, Law & Economics Research Paper No. 12-34, 2012) 6, 12

Jim Kerstetter, *How much is that patent lawsuit going to cost you?*, CNET (Apr. 5, 2012), http://news.cnet.com/8301-32973_3-57409792-296/how-much-is-that-patent-lawsuit-going-to-cost-you/ 11

Cited Authorities

Page

Merritt B. Fox, *Required Disclosure And Corporate Governance*, 62 Law & Contemp. Probs. 113 (1999) 6

P.J. Federico, Commentary on the New Patent Act, 35 U.S.C.A. 1, 56 (1954).....22

Perspectives on Patents: Post-Grant Review Procedures and Other Litigation Reforms: Hearing before the Subcomm. on Intellectual Property of the S. Judiciary Comm., 109th Cong. (2006) 6

Sara Jeruss, Robin Feldman & Thomas Ewing, *The AIA 500 Expanded: Effects of Patent Monetization Entities* (Apr. 9, 2013) http://ssrn.com/abstract=2247195 .....5, 9

INTEREST OF *AMICUS CURIAE*[1]

The Blue Cross Blue Shield Association ("BCBSA") is the trade association that coordinates the national interests of the independent, locally operated Blue Cross and Blue Shield companies ("BCBSA Member Companies"). Together, the 38 independent, community-based, and locally operated BCBSA Member Companies provide health insurance benefits to nearly 100 million people – almost one-third of all Americans – in all 50 states, the District of Columbia, and Puerto Rico. The BCBSA Member Companies offer a variety of insurance products to all segments of the population, including large public and private employer groups, small businesses, and individuals.

Petitioner Highmark, Inc. ("Highmark") is a Member Company of BCBSA, although BCBSA has had no involvement in the case and has no financial interest in its outcome. BCBSA has filed nine amicus briefs with the Court in the past ten years. The issues set forth in Highmark's *certiorari* petition interest BCBSA because of the high costs that patent litigations have imposed on a wide range of businesses in all sectors, from Member Companies, such as Highmark, to the entrepreneurs, small businesses, and large companies that purchase health insurance products from Member Companies. One

---

1. Respondent and Petitioner have been given timely notice and have both consented to the filing of this *amicus* brief under Supreme Court Rule 37. *Amicus* and its counsel represent that no party to this case nor its counsel authored this brief in whole or in part, and that no person other than *amicus* paid for or made a monetary contribution toward the preparation and submission of this brief.

way patent litigation costs can be held in check is through the proper application and review of attorney's fees awards under 35 U.S.C. § 285, thus giving the issues set forth Highmark's *certiorari* petition particular relevance and urgency.

INTRODUCTION AND SUMMARY OF THE ARGUMENT

In the decision below, the Federal Circuit reviewed an exceptional case finding of the Northern District of Texas. The District Court, after carefully reviewing the six-year history of the case, was "firmly convince[d]" that this case was "exceptional" under 35 U.S.C. § 285 because Respondent Allcare "had not done its homework when it began trolling for dollars and threatening litigation," Pet. App. 69a; continued to assert "meritless allegations after the lack of merit became apparent" and after they were proven to be "without support by its own expert's report and deposition testimony," apparently "as insurance or leverage," Pet. App. 77a-78a; "use[d] frivolous and vexatious tactics" in litigating the case, including the assertion of a frivolous *res judicata* defense, misrepresentations to another district court in support of its transfer motion, and flip-flopping its position on claim construction "without reasonable explanation" and after court ordered deadlines, "thus complicating Highmark's ability to advance its own claim construction and to defend against Allcare's elusive allegations," Pet. App. 82a-83a, 91a. The District Court's exhaustive analysis of the six-year record culminated with an exceptional case finding and an award of "reasonable attorney fees" to Petitioner as "the prevailing party." 35 U.S.C. § 285.

Despite having only appellate briefing, a limited record, and a brief oral argument, a split panel of the Federal Circuit reversed the district court's exceptional case finding with respect to Respondent's litigation of one patent claim (claim 52). The panel majority broke with long-standing circuit precedent by granting itself the authority to make a *de novo* determination of whether the "objectively baseless" prong of the two-part test for an "exceptional case" was satisfied, Pet. App. 9a, and then compounded its error by overturning the trial court's judgment that Respondent's construction of claim 52 was objectiveless baseless, based in part on an argument Respondent never advanced.

Because of the Federal Circuit's exclusive patent jurisdiction, this rule of *de novo* review will apply to all patent cases nationwide. And given that rehearing *en banc* was denied and the active members of the Federal Circuit are evenly divided on the issue, the Federal Circuit's newly established authority to engage in *de novo* review of fee awards under Section 285 will remain the law of the land unless and until this Court acts.

BCBSA agrees with Petitioner Highmark that *certiorari* review is warranted because the decision below is incompatible with the precedent of this Court and regional appellate courts and creates a deep division within the Federal Circuit itself. *See* Pet. 14-26. BCBSA writes separately here primarily to underscore the reasons why this case presents a question of national importance. *See id.* at 26-31.

The Federal Circuit's decision to review Section 285 attorney fee awards *de novo*—as opposed to

deferentially—distorts the proper allocation of judicial responsibility between federal trial and appellate courts. *De novo* appellate review of what are, in large part, factual determinations invades the traditional province of the district court and impedes the orderly administration of justice in the federal court system. Moreover, awarding attorney's fees has historically been part of the trial court's inherent power, as the trial court has a front seat view to the whole course of the litigation and the opportunity to view the entirety of the case firsthand, including the claims asserted and positions taken by the parties and the conduct and candor of the parties. Thus, the Federal Circuit's sharply divided decision to vest itself with the power to review such fee awards *de novo* is a significant development. *Certiorari* review is warranted to ensure the proper division of labor between the federal trial and appellate courts.

This is not simply an academic issue but also an issue of great *practical* importance. By refusing to afford deference to a trial court's factual findings and instead deciding for itself what is or is not an "exceptional case" based on only "thirty minutes with the attorneys and . . . [a] limited record and knowledge of the events taking place in the proceedings below," Pet. App. 201a (Moore, J., dissenting from denial of rehearing *en banc*), *de novo* review impedes the proper application of 35 U.S.C. § 285.

This is because Section 285 plays a critical role in regulating the quality of patent infringement lawsuits. Section 285 incentivizes patent holders and accused infringers to litigate only legitimate, good-faith disputes over patent infringement and validity. The prospect of a prevailing party recovering its attorney's fees in an

"exceptional case" both: (a) deters patent holders from filing dubious cases with the main purpose of extracting settlements based on threatened litigation costs rather than the merits of the asserted infringement; and (b) encourages willful infringers to settle cases and enter into license agreements where the infringement is clear cut and in bad faith. The decision below, however, will only embolden parties with dubious positions to litigate, knowing that they will have not one, but two *de novo* opportunities to avoid an exceptional case finding. It thus threatens to clog busy district courts with both meritless cases and meritorious cases opposed only by futile defenses.

Because of the Federal Circuit's exclusive jurisdiction over patent appeals, this is a national problem. And it is a problem that will only grow in magnitude because of the increasing amount and expense of patent infringement litigation. Between January 1, 2007 and December 31, 2008, 4,803 patent infringement lawsuits were filed.[2] For the equivalent period between January 1, 2011 and December 31, 2012, the number of patent lawsuits nearly doubled, to 8,196. This increase was largely attributable to lawsuits filed by non-practicing entities ("NPEs") (also commonly called patent assertion entities ("PAEs")). *Id.*

Patent lawsuits are among the most expensive cases to litigate. The American Intellectual Property Law Association ("AIPLA") estimates that a patent lawsuit

---

2. *See* Sara Jeruss, Robin Feldman & Thomas Ewing, *The AIA 500 Expanded: The Effects of Patent Monetization Entities* app. A (Apr. 9, 2013), *available at* http://ssrn.com/abstract=2247195.

involving $1 million to $25 million in claimed damages (*i.e.*, a typical patent case) costs each party, on average, $1.5 million in attorney's fees through discovery and $2.5 million in attorney's fees through trial.[3] As the claimed damages increase, the expected fees will also escalate.

The rise of NPE lawsuits has, according to some studies, inflicted billions of dollars of costs on the U.S. economy.[4] Some industry leaders characterize NPE settlements as an "innovation tax" on high-tech companies.[5] And, with NPEs losing 92% of cases adjudicated on the merits, many NPE lawsuits are the patent litigation equivalent to a "strike suit" in securities litigation – *i.e.*, the plaintiff makes a dubious claim for the purpose of gaining a settlement, before reaching litigation on the merits, for an amount equal to or lesser than the defendant's anticipated legal costs.[6]

---

3. Am. Intellectual Prop. Law Ass'n, *2011 Report of the Economic Survey* 35 (2012).

4. *See* James Beesen & Michael Meurer, *The Direct Costs from NPE Disputes* 18-19 (Bos. Univ. Sch. of Law, Law & Economics Research Paper No. 12-34, 2012).

5. *E.g.*, *Perspectives on Patents: Post-Grant Review Procedures and Other Litigation Reforms: Hearing before the Subcomm. on Intellectual Property of the S. Judiciary Comm.*, 109th Cong. 40-52 (2006) (statement of Mark Chandler, General Counsel, Cisco Systems).

6. Brian T. Yeh, Cong. Research Serv., R42668, *An Overview of the "Patent Trolls" Debate* 1 (2012); Merritt B. Fox, *Required Disclosure And Corporate Governance*, 62 Law & Contemp. Probs. 113, 119 (1999) (defining strike suit).

NPEs are able to impose this "tax" because of the asymmetric financial risks inherent in NPE lawsuits. NPEs, which typically have no operations, face little threat of counterclaims and have fewer documents to produce and depositions to defend than practicing entities. In contrast, a large company accused of patent infringement can incur millions of dollars simply responding to discovery requests propounded by an NPE. The one weapon that parties sued by NPEs have to level the playing field and deter abusive litigation tactics is the threat of shifting attorney's fees "in exceptional cases." 35 U.S.C. § 285 ("The court in exceptional cases may award reasonable attorney fees to the prevailing party.").

Of course, NPEs are not the only parties that can assert baseless positions or use litigation as a tool to vex and harass. One can readily imagine a company suing its competitor to interfere with a new product launch or attempts to obtain investor financing. Generic drug companies have long alleged that branded drug companies initiate litigation under the Hatch-Waxman Act to delay the launch of generic drugs. Likewise, accused infringers may assert baseless defenses, and engage in scorched-earth litigation tactics, to exhaust the resources of the party asserting patent infringement. In all of these instances, the threat of fee shifting serves as an important deterrent. More broadly, due to their complexity, patent lawsuits stretch the increasingly limited resources of the federal judiciary. Because Section 285 applies to both plaintiffs and defendants, it focuses the parties on matters of legitimate dispute and increases the quality of patent cases that are litigated in the federal courts.

As evidenced by the decision here, where the district court determined that the case was exceptional but a split panel of the Federal Circuit held otherwise, the result of *de novo* review of attorney's fees awards is that the Federal Circuit will simply substitute its own judgment for the judgment of the district court when determining whether a party's litigation positions and conduct were sufficiently meritless (or otherwise exceptional) to warrant fee shifting. Appellate review, however, is based only on excerpts of the trial court record; key facts and observations available to the district court are likely to be invisible in the appellate record. Such facts may include the candor and credibility of litigants and their counsel, the consistency of positions taken, efforts to block discovery or otherwise delay development of the factual record, continued advocation of positions after facts no longer support the position, and ever-shifting or obfuscatory arguments designed to draw out the litigation.

If this new *de novo* review standard is upheld, the deterrent effect of Section 285 will be weakened, and parties will be more likely to roll the dice on bad claims or defenses, knowing that if the claim fails and attorney's fees are awarded by the district court, they will get a clean slate at the Federal Circuit and will have the ability to make a *post hoc* rationalization of their positions and conduct. This is especially so given the panel majority's willingness to supply its own *post hoc* rationalizations for Respondent's conduct. A grant of *certiorari* is warranted.

ARGUMENT

I. THE RAPIDLY INCREASING AMOUNT AND EXPENSE OF PATENT LITIGATION HIGHLIGHTS THE IMPORTANCE OF SECTION 285'S ROLE IN REGULATING THE QUALITY OF PATENT SUITS

The question presented is important because of the increase in the number of patent cases filed and the high cost of litigating those cases. To manage this increase in filings and mitigate the high costs of litigation, district courts discretion to award attorney's fees in exceptional cases should not be unduly circumscribed. The Federal Circuit moved in the wrong direction when it decided to allow itself to reexamine *de novo* whether a case is objectively baseless and thus potentially exceptional. This important and unprecedented change in the law warrants review by this Court.

A. Patent Lawsuits, Which Routinely Cost Millions Of Dollars To Litigate, Have Nearly Doubled In The Last Five Years

As noted above, the number of patent infringement lawsuits filed in the last five years has nearly doubled. The vast majority of this increase has been fueled by NPE filings. From January 1, 2007 to December 31, 2008, NPEs filed 804 lawsuits, representing 17 percent of all patent infringement lawsuits.[7] Over 2011 and 2012, NPEs filed 3,844 lawsuits, a 378% increase in filings. *Id.* In contrast, the number of patent lawsuits filed between competitors

---

7. *See* Jeruss, *supra*, at app. 1.

increased by 6.7% during that same timespan. *Id.* As a result of skyrocketing NPE filings and the relatively flat increase in non-NPE filings, NPE suits now represent a majority (54.6%) of all patent cases.

Litigating these lawsuits is costly. The American Intellectual Property Law Association's ("AIPLA") most recent annual survey of patent litigation reported that the average attorney's fees to defend a typical patent case through trial totaled $2.5 million.[8] Most of those fees are discovery costs incurred on the front end of the case – the average attorney's fees from filing to the completion of discovery are $1.5 million. *Id.* Thus, the majority of patent litigation costs are incurred prior to the summary judgment phase of the case, which is usually the earliest opportunity to defeat a non-meritorious claim.

Many patent litigation costs are fixed costs and not tied to the amount in controversy. For example, parties routinely spend hundreds of thousands of dollars, if not millions of dollars, collecting and reviewing electronically stored information. Depositions and expert witnesses can quickly total several hundred thousand dollars. Although litigants typically spend more litigating a case when tens or hundreds of millions of dollars in damages are claimed, the cost of defending a case with only one million dollars in claimed damages remains substantial, as set forth below:

---

8. Am. Intellectual Prop. Law Ass'n, *supra*.

The cost of fighting a patent lawsuit

Planning to file a patent lawsuit or have to defend against one?
Your legal bills are going to add up fast.

How much could you lose?	2005	2011
Less than $1 million at risk		
- End of discovery	$350,000	$350,000
- All costs	$650,000	$650,000
$1 million to $25 million at risk		
-End of discovery	$1.25 million	$1.5 million
-All costs	$2 million	$2.5 million
More than $25 million at risk		
-End of discovery	$3 million	$3 million
-All costs	$4.5 million	$5 million

Source: Report of the Economic Survey 2011, American Intellectual Property Law Association

Fig. 1. Jim Kerstetter, *How much is that patent lawsuit going to cost you?*, CNET (Apr. 5, 2012), http://news.cnet.com/8301-32973_3-57409792-296/how-much-is-that-patent-lawsuit-going-to-cost-you/ (citing Am. Intellectual Prop. Law Ass'n, *supra*).

It should come as no surprise then that many companies accused of patent infringement choose to settle cases, irrespective of their merits, to avoid incurring these costs. Quite simply, a party can "win" a patent case but lose millions of dollars in the process. The collective impact of these cases is substantial. One study estimated that companies spent $29 billion defending NPE lawsuits

in 2011.[9] Section 285 is the principal mechanism under which some of these costs can potentially be recouped.

To be sure, a patent owner is not required under the Patent Act to practice a patented invention. And there are many examples of what most individuals would consider "good" NPEs – universities, garage inventors, and perhaps small businessmen trying to monetize inventions remaining from failed business ventures. There are also examples of NPEs bringing lawsuits on patents that were adjudged valid, infringed, and highly valuable. *See, e.g.*, *Microsoft Corp. v. i4i Ltd. P'ship*, 131 S. Ct. 2238 (2011) (patentee awarded approximately $300 million in damages). Although the strike suit nature of some NPE cases is used to illustrate the problem of rising patent litigation costs, the importance of Section 285 is not confined to lawsuits filed by NPEs. High legal costs can impact any patent litigant, thus the proper standard of review for Section 285 awards is not a pro-plaintiff or pro-defendant issue. For example, a manufacturer could file a frivolous patent lawsuit to interfere with its competitor's business relationships or to simply force the competitor to incur litigation costs. And, in some cases, defendants may attempt to exhaust the patent holder by fighting infringement claims to the bitter end based on specious defenses and endless discovery, thereby forcing both parties to incur substantial costs and consuming judicial resources. Section 285 is the best tool to deter conduct like this that harms the judicial system and the overall economy.

---

9. *See* Beesen, *supra*, at 18-19.

B. The Panel Majority's Decision Ignores That Section 285 Awards Are Inherently Fact Intensive And Thus Properly Left To District Courts

Notwithstanding the Federal Circuit's decision to engage in *de novo* review, the underlying case illustrates the fact-intensive nature of Section 285. Here, the district court awarded attorney's fees only after finding that: Respondent Allcare's assertions that two patent claims were infringed "were frivolous" and that "Allcare engaged in litigation misconduct" by (a) "asserting a frivolous position based on *res judicata* and collateral estoppel," (b) "shifting its claim construction position through the course of the proceedings before the district court," and (c) "making misrepresentations to the [transferor court] in connection with a motion to transfer venue." Pet. App. 6a-7a. Thus, the district court's decisions to award attorney's fees was based upon the trial court's view of the entire conduct of the case, taking into consideration the claims asserted, the positions taken, how long a position was taken, the frivolity of claims or positions in light of facts known or readily available, and a party's lack of candor, delay, and scorched-earth tactics – all of which taken together imposed unreasonable, unnecessary, and unjust attorney's fees and costs on Highmark.

Rather than focusing on the totality of the case and deferring to the district court, which viewed the case up close, the Federal Circuit's review of the exceptional case determination—already narrowed by a limited appellate record—focused on a discrete claim construction issue in concluding that Allcare's infringement claim was not objectively baseless. Despite affirming the district court's

rejection of Allcare's claim construction position, the Federal Circuit explained that Allcare hypothetically *could* have made a claim construction argument that *could* have supported its infringement position. Pet. App. 21a ("While Allcare may not have pointed to the specification as an argument in support of its theory, this theory as to the scope of claim 52 was argued repeatedly by Allcare.").

That Allcare did not make that argument and that both the district court and Federal Circuit adopted different claim construction positions was apparently of no moment, as the Federal Circuit concluded that Highmark was not entitled to attorney's fees because it failed "to establish that under this alternative claim construction, the allegations of infringement were objectively unreasonable." Pet. App. 22a.

This *sua sponte* endeavor to justify Allcare's otherwise baseless claim construction position underscores the degree to which the panel majority's decision to grant itself the authority to engage in *de novo* review distorts the administration of justice. Rather than review the district court's objectively baseless determination deferentially, the panel actually attacked and overcame that determination on its own.

This decision to apply *de novo* review to the objective prong of Section 285 triggered sharp divisions within the Federal Circuit. Judge Mayer dissented from the underlying opinion (authored by Judge Dyk and joined by Judge Newman), asserting that "the question of what constitutes [objectively] reasonable conduct under varying circumstances is a quintessentially factual inquiry." Pet. App. 35a.

In the Federal Circuit's denial of *en banc* review, Judge Moore filed a dissenting opinion (joined by Chief Judge Rader and Judges O'Malley, Reyna, and Wallach) that argued that "[o]ur court system has well-defined roles: the trial court makes factual findings and the appellate court reviews those findings with deference to the expertise of the trial court. An exceptional case determination under 35 U.S.C. § 285 has traditionally been one of the questions of fact determined by the trial court that is reviewable only for clear error." Pet. App. 190a. Judge Reyna also filed a dissenting opinion (joined in full by Judges Moore, O'Malley, and Wallach, and joined in part by Chief Judge Rader) that argued that although the Federal Circuit "may be tempted to view ourselves as best-positioned to weigh whether a given party's claim construction or infringement positions are objectively reasonable, in doing so, we fallaciously presume that we can neatly separate intertwined issues of law and fact." Pet. App. 208a. These sharp divisions within the Federal Circuit itself underscore the need for this Court to intervene to clarify the role of the trial court in applying Section 285.

C. Taking Discretion Away From District Courts Weakens Section 285's Deterrent Effects

With the average patent case costing millions of dollars to litigate, the threat of paying the prevailing party's attorney's fees is a powerful deterrent to frivolous claims and litigation mischief. When invoked, Section 285 deters both patent holders and accused infringers from engaging in non-meritorious litigation that is motivated by a desire to consume or exhaust the resources of the other party rather than adjudicate legitimate claims. The Federal Circuit's new *de novo* review standard, however, weakens these deterrent effects.

Unlike a district court, the Federal Circuit does not live with a case for years. Despite its expertise in patent law, the Federal Circuit is no different from any other appellate court in that it has less familiarity than the trial court with the contours and nuances of a case. As was apparently the case here, exceptional case determinations are often influenced by the live conduct of the parties during the litigation, but such facts are often invisible in the cold appellate record. In essence, turning Section 285 into a *de novo* determination means that a party that engages in vexatious litigation at the trial court gets a clean slate at the appellate court to excuse its conduct. Such a standard conflicts with the truism that "trial on the merits . . . is the main event and not simply a tryout on the road to appellate review." *E.g.*, *Freytag v. Comm'r*, 501 U.S. 868, 895 (1991) (quotation marks omitted).

If permitted to make a *de novo* determination, the Federal Circuit – in spite of its best intentions and desire to employ judicial restraint – will simply substitute its own judgment for the judgment of the trial court when reviewing exceptional case findings and attorney's fees awards. Doing so will often lead to the Federal Circuit reaching a different conclusion because it only has the sterile record before it. Moreover, because exceptional case determinations are inherently fact-intensive and turn on the candor, conduct, and credibility of the parties, this approach overrides the fact-finding role of the district courts. *See Anderson v. City of Bessemer City*, 470 U.S. 564, 575 (1985) ("[T]he parties to a case on appeal have already been forced to concentrate their energies and resources on persuading the trial judge that their account of the facts is the correct one; requiring them to persuade three more judges at the appellate level is requiring too much.").

Reviewing Section 285 awards *de novo* will mean that more exceptional case findings will be overturned and that fewer cases will ultimately result in the award of attorney's fees under Section 285. Before this case, and as Judge Reyna's dissent noted, the Federal Circuit had a long history of leaving attorney's fees awards undisturbed.[10] Now, in addition to this case, less than one month ago the Federal Circuit exercised its self-conferred *de novo* review authority and overturned another district court award of attorney's fees. *See Checkpoint Sys., Inc. v. All-Tag Sec. S.A.*, 2012-1085 (Fed. Cir. Mar. 25, 2013). This trend is likely to continue unless this Court confirms that the Federal Circuit must defer to the district court's determination absent an abuse of discretion.[11]

The decision below has diminished the predictability of fee awards and lessened the likelihood that such awards will survive on appeal. As a result, litigants necessarily will be less likely to see Section 285 as a deterrent to questionable filings and conduct. Review is thus warranted to ensure the proper administration of Section 285.

---

10. Pet. App. 205a-206a (collecting cases).

11. Indeed, in the decade after gaining *de novo* review of claim construction, the Federal Circuit found in 38.2% of claim construction appeals that at least one claim term was wrongly construed by the lower court, and reversed, vacated and/or remanded 29.7% of all cases that it heard due to a claim construction error. *See* David L. Schwartz, *Practice Makes Perfect? An Empirical Study of Claim Construction Reversal Rates in Patent Cases*, 107 Mich. L. Rev. 223, 249 (2008)

II. THE PANEL MAJORITY'S DECISION TO REVIEW SECTION 285 AWARDS *DE NOVO* USURPS DISCRETION THIS COURT HAS TRADITIONALLY GIVEN TRIAL COURTS

A. Under This Court's Precedents, Attorney's Fees Awards Are Reviewed For Abuse Of Discretion

The Federal Circuit's decision to grant itself *de novo* review of exceptional case determinations also conflicts with the broad discretion that district courts have long been afforded by this Court in the area of awarding attorney's fees. This Court's precedents confirm the inherent authority of trial courts to assess attorney's fees for abusive litigation conduct, which includes the filing and maintenance of frivolous cases. *See, e.g., F.D. Rich Co. v. United States ex rel. Indus. Lumber Co.*, 417 U.S. 116, 129 (1974); *Newman v. Piggie Park Enters., Inc.*, 390 U.S. 400, 402 n.4 (1968). Such matters of inherent authority are reviewed for an abuse of discretion.

The fact that attorney's fees awards under section 285 arise from statute rather than the trial court's common law inherent powers does not support the Federal Circuit's decision to review such awards *de novo*. Other statute or rule-based awards are reviewed for an abuse of discretion. *E.g., Cooter & Gell v. Hartmarx Corp.*, 496 U.S. 384, 385 (1990) ("A court of appeals should apply an abuse-of-discretion standard in reviewing all aspects of a district court's decision in a Rule 11 proceeding."); *Pierce v. Underwood*, 487 U.S. 552, 571 (1988) (EAJA attorney fee awards are reviewed for abuse of discretion); *Berkla v. Corel Corp.*, 302 F.3d 909, 917 (9th Cir. 2002) (attorney fees awarded under the Copyright Act are reviewed for

an abuse of discretion); *First Nat'l Bank in Sioux Falls v. First Nat'l Bank S.D.*, 679 F.3d 763, 771 (8th Cir. 2012) (attorney fees awarded under the Lanham Act are reviewed for an abuse of discretion).

The argument that attorney's fees in patent cases "frequently involve extraordinarily large awards, often amounting to millions of dollars" also does not support *de novo* review. Pet. App. 187a (denying *en banc* review). The Federal Circuit panel majority stated "that large fee awards militated against an abuse of discretion standard" and should instead "be reviewed more intensively." Pet. App. 187a-188a. *See also* Pet. App. 10a n.1 ("Under section 285 . . . the award of fees is routinely in the millions of dollars . . . , thus supporting *de novo* review."). However, this rationale for reviewing *de novo* attorney's fees awards ignores the circumstances in which most such awards arise.

Typically, attorney's fees are awarded after extensive litigation at the district court. Reviewing such awards *de novo* is more likely to cause the Federal Circuit to use appellate hindsight to second guess and improperly overturn awards rather than prevent large, unwarranted fee assessments. Curiously, just two years ago, the Federal Circuit recognized this danger when it affirmed that section 285 determinations are reviewed for clear error, stating that "the district court has lived with the case and the lawyers for an extended period. Having only the briefs and the cold record, and with counsel appearing before [the appellate court] for only a short period of time, [the appellate court is] not in the position to second-guess the trial court's judgment." *Eon-Net LP v. Flagstar Bancorp*, 653 F.3d 1314, 1324 (Fed. Cir. 2011). Thus, until the present

case, the Federal Circuit applied the correct standard of appellate review. Its decision to change that standard of review to *de novo* review should be reversed.

B. Section 285 Awards Are Mixed Questions Of Law And Fact, Which This Court Has Held In Similar Circumstances Are Subject To Review For Clear Error

The Federal Circuit panel majority attempted to justify *de novo* review of Section 285 awards on the basis of its assertion that Section 285, unlike other fee shifting statutes, can be cleanly divided into objective and subjective components:

> [W]hile both Rule 11 and section 285 have both subjective and objective components, Rule 11 review is not easily separated into these separate components as is the standard under section 285. Because deferential review is particularly appropriate as to the subjective determination, a deferential standard for the whole of Rule 11 is required. Under the *Brooks Furniture* standard, the section 285 inquiry is easily divided into objective and subjective components, only the subjective prong is reviewed under a deferential standard.

Pet. App. 10a n.1 (citations omitted) (citing *Brooks Furniture Mfg., Inc. v. Dutailier Int'l, Inc.*, 393 F.3d 1378 (Fed. Cir. 2005)). Although the Federal Circuit panel majority claims the Section 285 inquiry can "easily" be divided into objective and subjective components with each subject to different standards of review, it offers no explanation of why that would be true of Section 285

as opposed to other fee statutes. Indeed, this divided standard of appellate review appears to be a whole cloth creation.

Before the present case, Section 285 awards were treated as mixed questions of law and fact, subject to review for clear error. *See, e.g., Cybor Corp. v. FAS Techs., Inc.*, 138 F.3d 1448, 1460 (Fed. Cir. 1998). The decision below changes that standard of review and conflicts with this Court's recognition that mixed questions of law and fact are reviewed for clear error because legal issues are inextricably intertwined with factual determinations. *Salve Regina Coll. v. Russell*, 499 U.S. 225, 233 (1991) ("[D]eferential review of mixed questions of law and fact is warranted when it appears that the district court is 'better positioned' than the appellate court to decide the issue in question or that probing appellate scrutiny will not contribute to the clarity of legal doctrine." (quoting *Miller v. Fenton*, 474 U.S. 104, 114 (1985))). *See also Brown v. Plata*, 131 S. Ct. 1910, 1932 (2011) ("Because the 'district court is 'better positioned' . . . to decide the issue,' our review of the three-judge court's primary cause determination is deferential." (alteration in original) (citation omitted)); *Lilly v. Virginia*, 527 U.S. 116, 148-49 (1999) (Rehnquist, C.J., concurring) ("We have said that 'deferential review of mixed questions of law and fact is warranted when it appears that the district court is 'better positioned' than the appellate court to decide the issue in question or that probing appellate scrutiny will not contribute to the clarity of legal doctrine.'" (citation omitted)). For this additional reason, the Federal Circuit decision in this case is in conflict with this Court's precedent, warranting the granting of Highmark's *certiorari* petition.

III. THE PANEL MAJORITY'S INTERPRETATION OF "EXCEPTIONAL CASE" IN SECTION 285 CONFLICTS WITH OTHER CIRCUITS THAT HAVE INTERPRETED THE PHRASE IN SIMILAR STATUTES

The Federal Circuit misinterpreted the meaning of "exceptional case," and the significance of the addition of that language to the Patent Act in 1952, in concluding that the "exceptional case" requirement of Section 285 permits *de novo* review of awards under that section. Specifically, in denying *en banc* review of the underlying case, the Federal Circuit stated that "Section 285, as originally enacted [in 1946], provided that the district court 'may in its discretion award reasonable attorneys' fees.' The 1952 Patent Act deleted the 'in its discretion' language and replaced it with the 'exceptional case' standard that exists today." Pet. App. 186a (citation omitted). However, this revision did not alter the meaning of the statute. *See* P.J. Federico, Commentary on the New Patent Act, 35 U.S.C.A. 1, 56 (1954) (the new Section 285 "is substantially the same as the corresponding sentence of the old statute").

Cases from shortly after the enactment of Section 285 in 1952 (and from well before the creation of the Federal Circuit in 1982) confirm that adding the phrase "exceptional case" to the statute only imposed a substantive standard for determining when attorney's fees are to be awarded but did not alter the standard of appellate review. *See, e.g., Hoge Warren Zimmerman Co. v. Nourse & Co.*, 293 F.2d 779, 783 (6th Cir. 1961) ("[T]he substitution of the phrase 'in exceptional cases' has not done away with the discretionary feature."); *Talon, Inc.*

v. Union Slide Fastener, Inc., 266 F.2d 731, 738-39 (9th Cir. 1959) ("Both before and after the change in wording, this Court has interpreted this section as making the trial court's determination of attorney's fees final where it has clearly stated the basis for the award, except where there is an abuse of discretion amounting to caprice or an erroneous conception of the law on the part of the trial judge." (internal quotation marks omitted)). *See also DuBuit v. Harwell Enters., Inc.*, 540 F.2d 690, 693-94 (4th Cir. 1976) (discussing "[t]he legislative history of Section 285 as well as the predecessor statute" and finding that the 1952 revisions to the statute did not change the standard of appellate review).

The Federal Circuit's decision in the context of Section 285 also conflicts with other circuit courts that have interpreted similar fee shifting statutes. Attorney's fees awards are reviewed for an abuse of discretion under the counterparts to section 285 in other areas of intellectual property law, such as the Lanham Act, *i.e.*, the Trademark Act, (15 U.S.C. § 1117, awarding attorney's fees in "exceptional cases"), the Plant Variety Protection Act (7 U.S.C. § 2565, also awarding attorney's fees in "exceptional cases"), and the Copyright Act (17 U.S.C. § 505, giving the court discretion in awarding full costs or reasonable attorney's fees). Although this Court has not considered the issue, eight circuit courts have heard cases regarding the standard of appellate review for "exceptional case" determinations under the Lanham Act, and all eight have held that the awarding of fees is in the discretion of the trial court and that these awards are deferentially reviewed at the appellate level. *See e.g., Ji v. Bose Corp.*, 626 F.3d 116, 129 (1st Cir. 2010); *Goodheart*

Clothing Co. v. Laura Goodman Enters., Inc., 962 F.2d 268, 272 (2d Cir. 1992); *Securacomm Consulting, Inc. v. Securacom Inc.*, 224 F.3d 273, 279 (3d Cir. 2000); *Newport News Holdings Corp. v. Virtual City Vision, Inc.*, 650 F.3d 423, 441 (4th Cir. 2011); *Nat'l Bus. Forms & Printing, Inc. v. Ford Motor Co.*, 671 F.3d 526, 537 (5th Cir. 2012); *First Nat'l Bank in Sioux Falls*, 679 F.3d at 771; *Classic Media, Inc. v. Mewborn*, 532 F.3d 978, 990 (9th Cir. 2008); *Lipscher v. LRP Publ'ns, Inc.*, 266 F.3d 1305, 1320-21 (11th Cir. 2001). There is no reason that appellate review under Section 285 should be subject to a different standard. To the contrary, in order to maintain the necessary deterrent effect of section 285, deference to the district court's informed decision is particularly important.

CONCLUSION

For the foregoing reasons as well as those set forth by Petitioner, the petition for *certiorari* should be granted.

Respectfully submitted,

ROGER G. WILSON
Senior Vice President, General Counsel and Corporate Secretary
BLUECROSS BLUESHIELD ASSOCIATION
225 N. Michigan Avenue
Chicago, IL 60601
(312) 297-6439

BRIAN H. PANDYA
Counsel of Record
JAMES H. WALLACE, JR.
JOHN B. WYSS
MICHAEL L. STURM
THOMAS R. MCCARTHY
WILEY REIN LLP
1776 K Street, NW
Washington, D.C. 20006
(202) 719-7000
bpandya@wileyrein.com

Counsel For Amicus Curiae

April 24, 2013

JOINT APPENDIX

RECORD
AND
BRIEFS

Supreme Court, U.S.
FILED
DEC 2 - 2013
OFFICE OF THE CLERK

No. 12-1163

IN THE
Supreme Court of the United States

HIGHMARK INC.,
Petitioner,

v.

ALLCARE HEALTH MANAGEMENT SYSTEMS, INC.,
Respondent.

On Writ of Certiorari to the United States Court of Appeals for the Federal Circuit

JOINT APPENDIX, VOLUME I

NEAL KUMAR KATYAL
Counsel of Record
for Petitioner
DOMINIC F. PERELLA
DAVID M. GINN
R. CRAIG KITCHEN*
AMANDA K. RICE*
JONATHAN D. SHAUB*
HOGAN LOVELLS US LLP
555 13th Street, NW
Washington, DC 20004
(202) 637-5600
neal.katyal@hoganlovells.com

DONALD R. DUNNER
Counsel of Record
for Respondent
DON O. BURLEY
JASON W. MELVIN
CORA R. HOLT
FINNEGAN, HENDERSON,
FARABOW, GARRETT &
DUNNER, LLP
901 New York Avenue, NW
Washington, DC 20001
(202) 408-4000
don.dunner@finnegan.com

*Not admitted in DC; supervised by members of the firm

(additional counsel listed on inside cover)

PETITION FOR CERTIORARI FILED MARCH 25, 2013
CERTIORARI GRANTED OCTOBER 1, 2013

Library of Congress
Law Library

Additional counsel for petitioner:

CYNTHIA E. KERNICK
JAMES C. MARTIN
THOMAS M. POHL
REED SMITH LLP
225 Fifth Avenue
Pittsburgh, PA 15222
(412) 288-3131

Additional counsel for respondent:

ERIK R. PUKNYS
FINNEGAN, HENDERSON, FARABOW, GARRETT & DUNNER, LLP
3300 Hillview Avenue
Palo Alto, CA 94304
(650) 849-6600

TABLE OF CONTENTS

Page

VOLUME I

Relevant Docket Entries from the United States Court of Appeals for the Federal Circuit 1

Relevant Docket Entries from the United States District Court for the Northern District of Texas 3

Answer and Counterclaim of Defendant, filed December 16, 2003 34

Excerpts from Joint Status Report, filed January 20, 2004 46

Initial Scheduling Order, filed March 19, 2004 49

Proposed Joint Claim Construction, filed October 27, 2004 55

Excerpts from Declaration of Robert H. Shelton, filed January 12, 2005 221

Excerpts from Declaration of Thomas G. Plaskett, filed January 12, 2005 225

Order Striking Claim-Construction Motion and Related Filings, Directing an Amended Claim-Construction Motion, and Rendering Moot Related Filings and Motions, filed August 12, 2005 228

Notice Regarding the Appointment of a Special Master, filed July 19, 2006 232

Special Master's Report and Recommended Decisions on Claim Construction, filed December 20, 2006 236

TABLE OF CONTENTS—Continued

Page

Order Adopting Findings and Recommendations of Special Master, filed March 23, 2007 314

Order Granting Joint Motion to Appoint Special Master, filed December 19, 2007 317

Exhibit D (Infringement Claim Chart) to Expert Opinion of Robert A. Sherwin Regarding Reasonable Royalty Calculation, filed December 19, 2007 320

Special Master's Report and Recommended Decisions on Summary Judgment Motions and Motions to Exclude Expert Opinions and Reports, filed April 25, 2008 361

Amended Order Adopting Findings and Recommendations of Special Master, filed September 2, 2008 442

VOLUME II

Excerpts from Highmark's Appendix in Support of Motion for Exceptional Case Finding and Award of Attorney Fees, filed October 28, 2008:

Excerpts of Testimony of Robert H. Shelton, taken July 29, 2004 446

Letter from Robert H. Shelton to Highmark, dated April 16, 2002 462

Letter from Steven G. Hill to Frederick Colen and Cynthia Kernick, dated December 11, 2002 467

Letter and Attachment from Steven G. Hill to Don W. Martens, dated November 15, 2006 470

TABLE OF CONTENTS—Continued

Page

Excerpts from Allcare's Objections and Responses to Highmark's First Set of Interrogatories (Nos. 1.1-1.3), filed October 28, 2008 489

Excerpts from Allcare's Response in Opposition to Highmark's Motion for Exceptional Case Finding and Award of Attorney's Fees and Expenses and Brief in Support Thereof, filed January 7, 2009:

Excerpts from Declaration of Robert H. Shelton, dated January 6, 2009..... 498

Exhibit A to Declaration of Robert H. Shelton, filed January 7, 2009..... 507

Excerpts from Declaration of Steven G. Hill, dated January 6, 2009..... 535

Email from Cynthia Kernick to Steven G. Hill, dated August 8, 2002 614

Excerpts from Hearing on Motions in *Allcare Health Management System, Inc.* v. *Trigon Healthcare, Inc.*, No. 02-756-A (E.D. Va.), dated January 10, 2003 618

Excerpts from Transcript of Oral Argument in *Highmark* v. *Allcare*, No. 2009-1065 (Fed. Cir.), argued July 10, 2009..... 628

Order Granting Motions to Withdraw and Granting Motion for Extension of Time, filed April 26, 2010..... 640

Memorandum Opinion and Order in *Allcare Health Management System, Inc.* v. *Trigon Healthcare, Inc.*, No. 02-756-A (E.D. Va.), filed February 3, 2003 644

TABLE OF CONTENTS—Continued

Page

Memorandum Opinion and Order in *Allcare Health Management System, Inc.* v. *Trigon Healthcare, Inc.*, No. 02-756-A (E.D. Va.), filed February 3, 2003 663

SUPPLEMENTAL JOINT APPENDIX

U.S. Patent No. 5,301,105 ..... SA1

* * *

The appendix to the Petition for Certiorari contains the following material which is omitted from the Joint Appendix:

A. Opinion of the United States Court of Appeals for the Federal Circuit, decided August 7, 2012 ..... 1a

B. Opinion and Order of the District Court Granting Motion for Exceptional-Case Finding and Attorneys' Fees, filed April 1, 2010 ..... 44a

C. Order of the District Court Granting Motions to Reconsider, filed May 6, 2010 ..... 97a

D. Opinion and Order of the District Court Reconsidering and Vacating Sanctions, filed August 9, 2010 ..... 103a

E. Order of the District Court Awarding Attorneys' Fees, filed November 5, 2010..... 153a

F. Order of the District Court Denying Motion To Alter or Amend the Judgment or for a New Trial, filed January 18, 2011 ..... 171a

TABLE OF CONTENTS—Continued

Page

G. Order of the United States Court of Appeals for the Federal Circuit Denying Panel Rehearing and Rehearing *En Banc*, filed December 6, 2012 ..... 179a

RELEVANT DOCKET ENTRIES FROM THE UNITED STATES COURT OF APPEALS FOR THE FEDERAL CIRCUIT

NO. 2011-1219

HIGHMARK, INC.

Plaintiff-Appellee,

v.

ALLCARE HEALTH MANAGEMENT SYSTEMS, INC.

Defendant-Appellant.

DATE	PROCEEDINGS
6/6/2011	Brief of Defendant-Appellant Allcare Health Management Systems, Inc.
8/19/2011	Brief of Plaintiff-Appellee Highmark, Inc.
10/6/2011	Reply Brief of Defendant-Appellant Allcare Health Management Systems, Inc.
10/13/2011	Joint Appendix (Two Volumes) filed by Allcare Health Management Systems, Inc.
08/07/2012	Disposition: Affirmed-in-Part, Reversed-in-Part, and Remanded.

DATE	PROCEEDINGS
09/06/2012	Petition for panel rehearing, for en banc rehearing filed by Appellee Highmark, Inc.
09/06/2012	Petition for panel rehearing filed by Appellant Allcare Health Management Systems, Inc.
12/06/2012	Precedential Order: Petitions for panel rehearing and the petition for rehearing en banc are denied. By: Court En Banc. PER CURIAM. Dyk, with whom Newman joins, concurs in denial of petition for rehearing en banc; Moore, with whom Chief Rader, O'Malley, Reyna, and Wallach, join, dissents from denial of petition for rehearing en banc; Reyna, with whom Moore, O'Malley, and Wallach, join, dissents from denial of pet reh'g en banc. Rader joins Parts I and II of dissent.

RELEVANT DOCKET ENTRIES FROM THE UNITED STATES DISTRICT COURT FOR THE NORTHERN DISTRICT OF TEXAS

NO. 4:03-cv-01384-Y

HIGHMARK, INC.

Plaintiff,

v.

ALLCARE HEALTH MANAGEMENT SYSTEMS, INC.

Defendant.

DATE	NO.	PROCEEDINGS
04/03/2003	1	COMPLAINT with summons issued against Allcare Health Management System, Inc.
06/10/2003	4	MOTION to Dismiss by Allcare Health Management System, Inc. with Memorandum in Support.
06/10/2003	5	Declaration of Robert Shelton re motion to dismiss filed by Allcare Health Management System, Inc.
07/01/2003	9	RESPONSE in Opposition re MOTION to Dismiss filed by Highmark, Inc.

DATE	NO.	PROCEEDINGS
07/09/2003	10	REPLY to Response to Motion re MOTION to Dismiss filed by Allcare Health Management System, Inc.
07/23/2003	13	Surreply to Response to MOTION to Dismiss filed by Highmark, Inc.
11/19/2003	17	Memorandum Opinion and Order denying 4 Motion to Dismiss; Clerk of Court is directed to transfer this case to USDC for NDTX, Fort Worth Division.
11/26/2003		Case transferred in from Western District of Pennsylvania.
12/16/2003	22	ANSWER to Complaint, COUNTERCLAIM, JURY DEMAND against Highmark, Inc. by Allcare Health Management System, Inc.
01/07/2004	27	ANSWER to Counterclaim by Highmark, Inc.
01/12/2004	28	MOTION for Judgment on the Pleadings as to Defendant's Fifth Affirmative Defense and Related Claims and Averments by Highmark, Inc.

DATE	NO.	PROCEEDINGS
01/12/2004	29	Brief in Support re MOTION for Judgment filed by Highmark, Inc.
01/12/2004	30	Appendix in Support re MOTION for Judgment filed by Highmark, Inc.
01/20/2004	32	JOINT STATUS REPORT by Allcare Health Management System, Inc., Highmark, Inc.
01/30/2004	35	AMENDED ANSWER and Counterclaim of Defendant to Complaint by Allcare Health Management System, Inc.
03/19/2004	59	Initial SCHEDULING ORDER: Parties to participate in mediation in May 2004 Amended Pleadings due by 7/21/2004. Joinder of Parties due by 5/21/2004.
03/23/2004	61	ANSWER of Highmark Inc. to Defendant's Amended Counterclaim.
07/23/2004	119	AMENDED COMPLAINT FOR DECLARATORY JUDGMENT against Allcare Health Management System, Inc., filed by Highmark, Inc.

DATE	NO.	PROCEEDINGS
07/30/2004	122	Second AMENDED ANSWER and Counterclaim of Defendant to Answer to Complaint, Counterclaim by Allcare Health Management System, Inc.
08/11/2004	124	Third AMENDED ANSWER to Answer to Complaint, Counterclaim by Allcare Health management System, Inc.
09/02/2004	125	ANSWER to Third Amended Counterclaim of Allcare by Highmark, Inc.
10/27/2004	133	PROPOSED JOINT CLAIM CONSTRUCTION filed by Allcare Health Management System, Inc., Highmark, Inc.
10/29/2004	134	MOTION for Partial Summary Judgment or Non-Infringement and Invalidity of U.S. Patent No. 5,301,105 by Highmark, Inc.
10/29/2004	135	Memorandum in Support re MOTION for Summary Judgment filed by Highmark, Inc.

DATE	NO.	PROCEEDINGS
10/29/2004	136	Appendix in Support [vol. 1] re MOTION for Summary Judgment filed by Highmark, Inc.
10/29/2004	137	Appendix in Support [vol. 2] re 134 MOTION for Summary Judgment filed by Highmark, Inc.
11/04/2004	139	ORDER granting Motion for leave to supplement claim construction disclosures.
11/15/2004	140	RESPONSE to Motion re MOTION for Partial Summary Judgment filed by Allcare Health Management System, Inc.
11/17/2004	143	SEALED Memorandum in Support of Allcare's Opposition to Highmark's Motion for Partial Summary Judgment of Non-Infringement and invalidity of US Patent No. 5,301,105 by Allcare Health Management System, Inc.
11/17/2004	144	SEALED Appendix in Support of Deft. Allcare's Opposition to Highmark's Motion for Partial

DATE	NO.	PROCEEDINGS
		Summary Judgment of Non-Infringement and Invalidity of US Patent No. 5,301,105 by Allcare Health Management System, Inc.
12/07/2004	153	MEMORANDUM IN REPLY to Allcare's Opposition to Highmark's MOTION for Partial Summary Judgment of Non-Infringement and Invalidity of US Patent No. 5,301,105 filed by Highmark, Inc.
12/07/2004	154	Appendix in Support re Plaintiff Highmark Inc.'s Memo in Reply to Allcare's Opposition to Highmark's M/for Partial Summary Judgment of Non-Infringement and Invalidity of US Patent No 5,301,105. filed by Highmark, Inc.
12/13/2004	158	***STRICKEN PER ORDER NO. 282*** MOTION for Claim Construction by Allcare Health Management System, Inc., Allcare Health Management System, Inc.

DATE	NO.	PROCEEDINGS
		with Memorandum in Support.
12/23/2004	167	MOTION to Strike MOTION for Claim Construction by Highmark, Inc. with Supporting Memorandum.
12/23/2004	168	MOTION for Partial Summary Judgment of Unenforceability of US Patent No. 5,301,105 by Highmark, Inc.
12/23/2004	169	Memorandum in Support re MOTION for Partial Summary Judgment of Unenforceability of US Patent No. 5,301,105 filed by Highmark, Inc.
12/23/2004	170	Appendix, Part 1 & Attachments pgs. 1-55 in Support re MOTION for Partial Summary Judgment of Unenforceability of US Patent No. 5,301,105 filed by Highmark, Inc.
12/23/2004	171	Appendix Part 2, Attachments pgs. 56-120 in Support re MOTION for Partial Summary Judgment of

DATE	NO.	PROCEEDINGS
		Unenforceability of US Patent No. 5,301,105 filed by Highmark, Inc.
01/12/2005	183	RESPONSE to Motion re MOTION for Partial Summary Judgment filed by Allcare Health Management System, Inc.
01/12/2005	184	Memorandum in Support re Response to Motion filed by Allcare Health Management System, Inc.
01/12/2005	185	Appendix in Support re Response to Motion filed by Allcare Health Management System, Inc. (Attachments: # 1 # 2 # 3 # 4 # 5 # 6 # 7 # 8 # 9)
01/13/2005	186	RESPONSE to Motion re Emergency MOTION to Strike 158 MOTION for Claim Construction filed by Allcare Health Management System, Inc.
01/14/2005	187	Plaintiff Highmark Inc.'s REPLY to Allcare's Response to Emergency Motion Supporting Memorandum to

DATE	NO.	PROCEEDINGS
		Strike Allcare's Motion for Claim Construction.
01/14/2005	191	Plaintiff Highmark Inc.'s Emergency MOTION and Supporting Memorandum to Strike Allcare's Response and Memorandum to Highmark's Motion for Summary Judgment of Unenforceability of U.S. Patent No. 5,301,105.
01/14/2005	192	Appendix in Support re MOTION to Strike 183 Response to Motion filed by Highmark, Inc.
01/26/2005	195	RESPONSE to Motion re Emergency MOTION to Strike Response to Motion filed by Allcare Health Management System, Inc.
02/02/2005	198	REPLY to Allcare's Response to Highmark's Emergency MOTION and Supporting Memorandum to Strike Allcare's Response and Memorandum to Highmark's Motion for Summary Judgment of Unenforceability of US Patent No 5,301,105 filed by Highmark, Inc.

DATE	NO.	PROCEEDINGS
02/09/2005	204	Sur-reply to Response to MOTION to Compel filed by Highmark, Inc.
06/29/2005	249	REPLY to Response to Motion re MOTION for Summary Judgment *Highmark's Reply to Allcare's Opposition to Highmark's Motion For Summary Judgment of Unenforceability of U.S. Patent No. 5,301,105* filed by Highmark, Inc. (Attachments: # 1 Appendix Cover page # 2 Appendix Index # 3 Appendix pages 1 through 25 # 4 Appendix pages 26 through 50 # 5 Appendix pages 51 through 106 # 6 Appendix certificate of service)
06/29/2005	250	REPLY to Response to Motion re MOTION for Summary Judgment *Highmark Inc.'s Objections to Evidence Cited in Allcare's Memorandum in Support of Allcare's Response to Highmark's Motion for Partial Summary Judgment of Unenforceability (related to Doc. No. 184 and 185)* filed by

DATE	NO.	PROCEEDINGS
		Highmark, Inc. (Attachments: # 1 Appendix Appendix).
07/05/2005	253	RESPONSE in Opposition re MOTION for Claim Construction *Highmark, Inc.'s Objections to Evidence Cited in Allcare's Motion for Claim Construction* filed by Highmark, Inc.
08/12/2005	281	ORDER denying as Premature Highmark's Motion for Partial Summary Judgment of Non-Infringement (without prejudice to refiling of amd. non-infringement summary-judgment motion at proper time), finding as moot Motion to Strike and Motion for Oral Argument...see order for further specifics (Signed by Judge Terry R Means on 8/12/05)
08/12/2005	282	ORDER striking Allcare's Motion for Claim Construction, Highmark's Opposition to Deft's Motion for Claim Construction of US Patent, and Allcare's Reply to

DATE	NO.	PROCEEDINGS
		Highmark's Response in Opposition to Deft's Motion for claim Construction of US Patent; finding as moot Highmark's Objections to Evidence Cited in Allcare's Motion for Claim Construction, Motion to Strike, finding as moot Motion for Leave to File....see order for specifics (Signed by Judge Terry R Means on 8/12/05).
09/06/2005	287	Allcare's AMENDED MOTION for Claim Construction by Allcare Health Management System, Inc. with Memorandum in Support. (Attachments: # 1 Exhibit A - Order).
09/07/2005	290	*SEALED* Appendix in Support of Motion for Claim Construction by Allcare Health Management System, Inc.
09/08/2005	292	Appendix in Support re MOTION to Amend/Correct *Claim Construction Volume 1* filed by Allcare Health Management System, Inc.

DATE	NO.	PROCEEDINGS
		(Attachments: # 1 Appendix A 1-60 # 2 Appendix A 61-120 # 3 Appendix 121-179# 4 Appendix A 180-239 # 5 Appendix A 240-299 # 6 Appendix A 300-359# 7 Appendix A 360-429 # 8 Appendix A 430-515).
09/08/2005	293	Appendix in Support re MOTION to Amend/Correct *Claim Construction Volume 2* filed by Allcare Health Management System, Inc. (Attachments: # 1 Appendix A 516-639# 2 Appendix A 640-709# 3 Appendix A 710-769 # 4 Appendix A 770-815).
09/28/2005	304	ORDER DENYING AS PREMATURE PLAINTIFF'S MOTION FOR PARTIAL SUMMARY JUDGMENT OF UNENFORCEABILITY, RENDERING MOOT PLAINTIFF'S OBJECTIONS AND DEFENDANT'S MOTION TO STRIKE, AND AMENDING THE COURT'S AGREED ORDER OF DECEMBER 22 2004 denying

DATE	NO.	PROCEEDINGS
		Motion for Summary Judgment, finding as moot Motion to Strike.
11/07/2005	307	RESPONSE in Opposition re MOTION to Amend/Correct *Claim Construction Plaintiff Highmark Inc.'s Opposition to Allcare's Amended Motion for Claim Construction* filed by Highmark, Inc.
11/07/2005	308	Appendix in Support re Response in Opposition to *Allcare's Amended Motion for Claim Construction* filed by Highmark, Inc.
11/21/2005	329	REPLY to Response to Motion re MOTION to Amend/Correct *Claim Construction of U.S. Patent No. 5,301,105 and Brief* filed by Allcare Health Management System, Inc.
07/19/2006	353	NOTICE REGARDING THE APPOINTMENT OF A SPECIAL MASTER...parties are directed to file nlt Aug 4 2006 a joint notice.
08/16/2006	360	ORDER Appointing Special Master and Referring

DATE	NO.	PROCEEDINGS
		Motion...Don W. Martens appointed special master in this case.
12/08/2006	366	STATUS REPORT of the Special Master by Don W. Martens.
12/20/2006	367	RESPONSE filed by Don W. Martens re Order,,, *Special Master's Report And Recommended Decisions On Claim Construction.*
12/20/2006	368	ADDITIONAL ATTACHMENTS *Record of Materials and Evidence Considered by Special Master* to Response to Order, Order,,, by Special Master Don W Martens. (Attachments: # 1 Appendix Attachment 8 # 2 Appendix Attachment 9 # 3 Appendix Attachment 13 # 4 Appendix Attachment 14).
01/09/2007	370	OBJECTION filed by Allcare Health Management System, Inc. re Response to Order *Special Master's Report and Recommended Decisions on Claim Construction*

DATE	NO.	PROCEEDINGS
		(Attachments: # 1 Exhibit "A").
01/09/2007	371	Appendix in Support filed by Allcare Health Management System, Inc. re Objection to *Special Master's Report and Recommended Decisions on Claim Construction.*
01/29/2007	373	RESPONSE in Opposition filed by Highmark, Inc. re Objection to *Special Master's Report and Recommended Decision on Claim Construction* (Attachments: # 1 Appendix Part 1 of 10 # 2 Appendix Part 2 of 10 # 3 Appendix Part 3 of 10# 4 Appendix Part 4 of 10 # 5 Appendix Part 5 of 10 # 6 Appendix Part 6 of 10 # 7 Appendix Part 7 of 10# 8 Appendix Part 8 of 10# 9 Appendix Part 9 of 10 # 10 Appendix Part 10 of 10).
02/14/2007	374	REPLY in Support filed by Allcare Health Management System Inc. (of Objections to Special Master's Report & Recommended Decisions on

DATE	NO.	PROCEEDINGS
		Claim Construction) re Response in Opposition.
03/23/2007	375	ORDER ADOPTING FINDINGS AND RECOMMENDATIONS OF SPECIAL MASTER.
10/31/2007	397	MOTION for Summary Judgment of *Enforceability of Patent No. 5,301,105* by Allcare Health Management System, Inc. with Brief/Memorandum in Support.
10/31/2007	398	Brief/Memorandum in Support filed by Allcare Health Management System, Inc. re MOTION for Summary Judgment of *Enforceability of Patent No. 5,301,105* (Attachments: # 1 Appendix Exhibit A (pt. 1) # 2 Appendix Exhibit A (pt. 2) # 3 Appendix Exhibit A (pt. 3) # 4 Appendix Exhibit A (pt. 4) # 5 Appendix Exhibit B # 6 Appendix Exhibit C to C-6 # 7 Appendix Exhibits D, E, F, G # 8 Appendix Exhibit H# 9 Appendix Exhibits H-A to H-

DATE	NO.	PROCEEDINGS
		Inc. re 400 MOTION for Summary Judgment *of Non-Infringement and Invalidity as to U.S. Patent No. 5,301,105.*
11/20/2007	434	*SEALED* Response to Highmark's Motion for Summary Judgment of Enforceability of Patent No. 5,301,105 by Allcare Health Management System, Inc.
12/07/2007	448	REPLY filed by Allcare Health Management System, Inc. re MOTION for Summary Judgment *of Enforceability of Patent No. 5,301,105 and Brief.*
12/07/2007	455	REPLY filed by Highmark, Inc. re MOTION for Summary Judgment *of Non-Infringement and Invalidity as to U.S. Patent No. 5,301,105.*
12/14/2007	456	Joint MOTION To Re-Appoint Special Master by Allcare Health Management System, Inc. with Brief/Memorandum in Support.

DATE	NO.	PROCEEDINGS
12/19/2007	459	ORDER granting Joint Motion to appoint special master...Don W. Martens appointed as Special Master...nlt Apr 13 2008 file with the court either a report and recommendation on motions or a status update on motions listed in order.
12/19/2007	477	*SEALED* Confidential Appendix in support of Highmark's Memorandum in Opposition to Allcare's Motion to Strike the Expert Reports of Jeremy Nobel, MD and exclude related opinion testimony by Highmark, Inc.
02/06/2008	481	NOTICE by Allcare Health Management System, Inc. *of Withdrawal of Infringement Contentions Directed to Claim 102.*
04/11/2008	482	STATUS REPORT *ON SUMMARY JUDGMENT MOTIONS AND MOTIONS TO EXCLUDE EXPERT OPINIONS AND REPORTS* by Don W Martens.

DATE	NO.	PROCEEDINGS
04/25/2008	484	[unsealed per order of 10/17/09] Special Master's Report and Recommended Decisions on Summary Judgment Motions and Motions to Exclude Expert Opinions and Reports by Don W Martens.
05/16/2008	486	*SEALED* Objections to Special Master's Report and Recommended Decisions on Summary Judgment Motions by Allcare Health Management System, Inc.
06/19/2008	489	RESPONSE in Opposition filed by Highmark, Inc. re 486 Sealed Document *Allcare's Objections to the Special Master's Report and Recommended Decision on Summary Judgment.*
07/22/2008	496	Supplemental Document by Highmark, Inc. as to Response in Opposition to *Allcare's Objections to Special Master's Report and Recommended Decisions on Summary Judgment Motions.*

DATE	NO.	PROCEEDINGS
07/25/2008	499	*SEALED* Allcare Health Management System, Inc. REPLY to Highmark Inc.'s Response to Allcare's Objections to the Special Master's Report and Recommended Decisions on Summary Judgment and Brief.
08/28/2008	503	ORDER ADOPTING FINDINGS AND RECOMMENDATIONS OF SPECIAL MASTER granting in part and denying in part Motion for Summary Judgment; denying Motion for Summary Judgment; rendering moot Motion to Exclude; rendering moot Motion to Exclude; denying Motion to Exclude; and denying Motion to Exclude. See Order for further specifics.
09/02/2008	504	AMENDED ORDER ADOPTING FINDINGS AND RECOMMENDATIONS OF SPECIAL MASTER.

DATE	NO.	PROCEEDINGS
10/07/2008	505	Unopposed MOTION to Withdraw *Without Prejudice Count II (Invalidity) and Count III (Unenforceability) of Highmark's Amended Complaint for Declaratory Judgment* filed by Highmark, Inc.
10/14/2008	506	FINAL JUDGMENT...the only claims that remain pending are dism w/o prej; costs under 28 USC 1920 are taxed against the party incurring them. cy to stats.
10/15/2008	508	AMENDED FINAL JUDGMENT: See Judgment for specifics.
10/28/2008	513	MOTION for Exceptional Case Finding and Award of Attorney Fees and Expenses filed by Highmark, Inc.
10/28/2008	515	Brief/Memorandum in Support filed by Highmark, Inc. re MOTION for Exceptional Case Finding and Award of Attorney Fees and Expenses.

DATE	NO.	PROCEEDINGS
10/28/2008	516	Appendix in Support filed by Highmark, Inc. re MOTION for Exceptional Case Finding and Award of Attorney Fees and Expenses.
10/28/2008	517	DOC# 517, *SEALED* CONFIDENTIAL APPENDIX filed by Highmark, Inc.
01/07/2009	526	DOC# 526, *SEALED* Response in Opposition to Highmark's Motion for Exceptional Case finding and Award of Attorneys Fees and Expenses with Brief pursuant to order dated 2/20/2004 filed by Allcare Health Management System, Inc.
01/07/2009	527	DOC# 527, *SEALED* Appendix with Tabs A,B,C,D, in Support 526 Response pursuant to order dated 2/4/2004 filed by Allcare Health Management System, Inc.
02/02/2009	530	*Highmark Inc.'s* REPLY *to Allcare's Response* re: MOTION for Exceptional Case Finding and Award of

DATE	NO.	PROCEEDINGS
		Attorney Fees and Expenses filed by Highmark, Inc.
03/03/2009	533	SUPPLEMENTAL Appendix in Support filed by Highmark, Inc. re MOTION for Exceptional Case Finding and Award of Attorney Fees and Expenses.
09/04/2009	541	Supplemental Brief in Further Support filed by Highmark, Inc. re MOTION for Exceptional Case Finding and Award of Attorney Fees and Expenses.
09/15/2009	544	RESPONSE in Opposition filed by Allcare Health Management System, Inc. re MOTION for Exceptional Case Finding and Award of Attorney Fees and Expenses
09/23/2009	549	*Highmark's* REPLY to *Allcare's Response the Highmark's Supplemental Brief* re: MOTION for Exceptional Case Finding and Award of Attorney Fees and Expenses filed by Highmark, Inc.

DATE	NO.	PROCEEDINGS
12/17/2009	560	NOTICE *of Filing of Proposed Findings of Fact and Conclusions of Law in Opposition* re: MOTION for Exceptional Case Finding and Award of Attorney Fees and Expenses filed by Allcare Health Management System, Inc.
12/21/2009	561	MOTION to Strike *and Supporting Memorandum to Strike Allcare's Late Filed Proposed Findings of Fact and Conclusions of Law* [Doc. No. 560-2] filed by Highmark, Inc. with Brief/Memorandum in Support.
01/11/2010	562	RESPONSE filed by Allcare Health Management System, Inc. re: MOTION to Strike *and Supporting Memorandum to Strike Allcare's Late Filed Proposed Findings of Fact and Conclusions of Law [Doc. No. 560-2].*
01/22/2010	563	REPLY filed by Highmark, Inc. re: MOTION to Strike *and Supporting Memorandum to Strike Allcare's Late Filed*

DATE	NO.	PROCEEDINGS
		Proposed Findings of Fact and Conclusions of Law [Doc. No. 560-2].
03/31/2010	564	OPINION AND ORDER GRANTING MOTION FOR EXCEPTIONAL-CASE FINDING AND ATTORNEY'S FEES... granting Motion for Leave to File filed by Highmark, Inc., denying as moot Motion for Leave to File, filed by Highmark, Inc., denying as moot Motion for Miscellaneous Relief filed by Highmark, Inc., denying as moot Motion to Strike filed by Highmark, Inc.
04/01/2010	565	NOTICE OF CORRECTED ORDER UNDER RULE 60(A)...On March 31, 2010, the court issued an order granting the motion for exceptional-case finding. It has come to the Court's attn that the order contained a clerical error in that it improperly named Alfredo Silva of the law firm McKool Smith as one of the attorneys

DATE	NO.	PROCEEDINGS
		whose conduct justified an exceptional-case finding under 35 USC 285 and against whom sanction were imposed...the references to Silva should have been to Mike McKool Jr, also of McKool Smith. A revised order with this correction will be issued this same day.
04/01/2010	566	OPINION AND ORDER GRANTING MOTION FOR EXCEPTIONAL-CASE FINDING AND ATTORNEY'S FEES...this order is being issued to correct a clerical error in the original order doc. The references to Alfredo Silva in the original order are replaced in this order with Mike McKool Jr. cy to Martens/Keltner.
04/26/2010	581	ORDER GRANTING MOTIONS TO WITHDRAW AND GRANTING MOTION FOR EXTENSION OF TIME; granting Motion to Withdraw as Attorney. Attorney Steven G Hill; Mike McKool, Jr; Luke

DATE	NO.	PROCEEDINGS
		F McLeroy; Alfredo L Silva; R Darryl Burke and Christopher J. Harrington terminated; granting Motion to Extend Time.; granting Motion to Withdraw as Attorney. Attorney Steven G. Hill; Mike McKool, Jr; Luke F McLeroy; Alfredo L Silva; R. Darryl Burke and Christopher J. Harrington terminated. Allcare granted fifteen additional days to file a response brief to Highmark's opening brief. Thus, Allcare will have 45 days, in addition to the time remaining on Highmark's deadline to file its brief, to obtain new counsel and file its response.
04/30/2010	604	NOTICE OF APPEAL of a patent case to the Federal Circuit as to Memorandum Opinion and Order, by V. Bryan Medlock, Sidley Austin, LLP.
08/09/2010	633	OPINION AND ORDER RECONSIDERING AND VACATING SANCTIONS:

DATE	NO.	PROCEEDINGS
		The sanctions imposed on Steven Hill and his firm, Hill, Kertscher, & Wharton, LLP; Joseph F. Cleveland and his firm, Bracket & Ellis; and Mike McKool Jr., Christopher Harrington, Luke McLeroy, and R. Darryl Burke and their firm, McKool Smith LLP are hereby VACATED. The clerk of Court is DIRECTED to refund the sanctions paid by these attorneys. In the event that the Federal Circuit remands the issue of the sanctions imposed on V. Bryan Medlock and his firm, Sidley Austin, LLP, those sanctions will be vacated as well.
11/05/2010	639	ORDER AWARDING ATTORNEYS' FEES: Highmark shall recover attorneys's fees in the amount of $4,694,727.40 and $209,626.56 in expenses. Highmark shall also recover expert fees and expenses in the amount of $375,400.05.

DATE	NO.	PROCEEDINGS
		Interest shall accrue on these amounts, beginning April 1, 2010, at a rate of 0.42% pursuant to 28 U.S.C. § 1961.
02/10/2011	665	NOTICE OF APPEAL to the Federal Circuit as to Memorandum Opinion and Order, by Allcare Health Management System, Inc.

Highmark. Allcare further admits that a true and correct copy of the '105 patent is attached to the underlying complaint as Exhibit A. Allcare denies that the Plaintiff is entitled to any relief sought on the underlying complaint and otherwise denies the allegations of Paragraph 1 of the Complaint.

2. Upon information and belief, Allcare admits the allegations of Paragraph 2 of the Complaint.

3. Allcare admits the allegations of Paragraph 3 of the Complaint in part and denies them in part. Specifically, Allcare admits that it has its principal place of business in Fort Worth, Texas, and denies that it is a Delaware corporation.

4. Allcare admits that this Court has subject matter jurisdiction over this action pursuant to the Declaratory Judgment Act and under 28 U.S.C. §1338(A).

5. Allcare admits that venue is proper in this judicial district. Otherwise, Allcare denies the allegations of Paragraph 5 of the Complaint.

6. Allcare admits that the '105 patent issued on April 5, 1994. Allcare denies the remaining allegations of Paragraph 6 of the Complaint.

7. Allcare admits the allegations of Paragraph 7 of the Complaint in part and denies them in part. Prior to April 2002, Allcare admits it initiated litigation against approximately twenty-four (24) separate entities, each of which was unlicensed under the '105 patent at the time of the commencement of litigation. Allcare further admits that each of the actions asserted against these entities asserted infringement of one or more claims of the '105 patent. For each litigation instituted by

Allcare prior to April of 2002, Allcare admits that these cases have been terminated, and that each case was resolved by a settlement agreement. Allcare denies the remaining allegations of Paragraph 7 of the Complaint.

8. Allcare admits the allegations of Paragraph 8 of the Complaint in part and denies them in part. Specifically, Allcare admits that on April 16, 2002, Allcare sent a letter to Highmark in Pittsburgh, Pennsylvania, enclosing a copy of the '105 patent, summarizing the findings of an independent analysis of Highmark's transaction processing systems for pre-authorizations, referrals to specialists and a number of other processes that are covered by the '105 patent, and on this basis asserting that Highmark infringes the '105 patent and requesting that Highmark take a license under the patent. Allcare denies the remaining allegations of Paragraph 8 of the Complaint.

9. Allcare admits the allegations of Paragraph 9 of the Complaint in part and denies it in part. Specifically, Allcare admits that on May 24, 2002, it commenced an action asserting infringement of the '105 patent against Trigon Health Care, Inc. in the Eastern District of Virginia (the "Trigon Action"). However, Allcare is without knowledge or information sufficient to form a belief as to the date upon which Highmark became aware that Allcare had commenced the Trigon Action, and denies the allegations on that basis.

10. Allcare admits the allegations of Paragraph 10 of the Complaint in part and denies them in part. Specifically, Allcare admits that following its April 16, 2002 letter and continuing to the present date,

Highmark and Allcare engaged in discussions concerning the merits of Allcare's claims under the '105 patent. The remaining allegations of Paragraph 10 of the Complaint are denied.

11. Allcare admits the allegations of Paragraph 11 of the Complaint in part and denies them in part. Specifically, Allcare admits counsel for Allcare wrote a letter to Highmark on December 11, 2002, and that such letter communicated the terms on which Allcare was prepared to enter into a license with Highmark if such an agreement were to be concluded prior to the court in the Trigon Action ruling on a number of material issues. The remaining allegations of Paragraph 11 of the Complaint are denied.

12. Allcare admits the allegations of Paragraph 12 of the Complaint.

13. Allcare admits the allegations of Paragraph 13 of the Complaint in part and denies them in part. Specifically, Allcare admits that Allcare wrote Highmark a letter on March 4, 2003, and enclosed therein copies of certain rulings and opinions from the Trigon Action. The remaining allegations of Paragraph 13 of the Complaint are denied.

14. Allcare admits the allegations of Paragraph 14 of the Complaint and adds that there is an actual and justiciable controversy within the jurisdiction of this Court concerning the infringement, validity and enforceability of the '105 patent pursuant to the Declaratory Judgment Act.

15. Allcare admits the allegations of Paragraph 15 of the Complaint.

16. With regard to Paragraph 16 of the Complaint, Allcare incorporates herein by reference

the contents of Paragraphs 1-15 of this answer as if set forth herein in full.

17. Allcare denies the allegations of Paragraph 17 of the Complaint.

18. Allcare denies the allegations of Paragraph 18 of the Complaint.

19. Allcare denies the allegations of Paragraph 19 of the complaint.

20. With regard to Paragraph 20 of the Complaint, Allcare hereby incorporates herein by reference Paragraphs 1-15 of this Answer as if set forth herein in full.

21. Allcare denies the allegations of Paragraph 21 of the Complaint.

22. Allcare denies the allegations of Paragraph 22 of the Complaint.

23. Allcare denies the allegations of Paragraph 23 of the Complaint.

24. In response to the allegations of Paragraph 24 of the Complaint, Allcare incorporates by reference herein Paragraphs 1-15 of this Answer, as if set forth herein in full.

25. Allcare denies the allegations of Paragraph 25 of the Complaint.

26. Allcare denies that Highmark is entitled to judgment or any relief in connection with its Complaint.

AFFIRMATIVE DEFENSES

As in for its affirmative defenses, Allcare states as follows:

First Affirmative Defense

As in for its first defense, Allcare states that the Complaint fails to state a claim upon which the Court may award relief.

Second Affirmative Defense

As in for its second defense, Allcare relies upon the presumption of patent validity and enforceability, which can only be overcome by clear and convincing evidence.

Third Affirmative Defense

As in for its third defense, Allcare relies upon doctrine of actual notice and constructive notice.

Fourth Affirmative Defense

As in for its fourth defense, Allcare shows that the Complaint lacks sufficient detail as to Counts 1 and 2 to provide a basis for any relief.

Fifth Affirmative Defense

As in for its fifth defense, Allcare shows that Highmark participated in the defense provided in the Trigon Action, with a common interest in the outcome of such earlier litigation respecting the patent-in-suit, and as a result is bound by the orders handed down in the Trigon Action by virtue of the doctrines of *res judicata* and collateral estoppel.

Sixth Affirmative Defense

As in for its sixth defense, Allcare incorporates by reference the substance of its counterclaims.

COUNTERCLAIM

As in for its counterclaim, Allcare shows the Court as follows:

1. Highmark brought the instant action to show the Court that it is entitled to declaratory judgment regarding the infringement, enforceability and validity of the '105 patent. Therefore, it has specifically placed before the Court's jurisdiction these issues for resolution, and has therefore subjected itself to the personal jurisdiction of the Court.

2. Highmark has known of the existence of the '105 patent since at least on or about April 18, 2002, the date on which it received actual notice thereof by its receipt of Allcare's letter dated April 16, 2002.

3. Highmark has known of Allcare's contention that Highmark should license the '105 patent since on or about April 18, 2002.

4. Highmark has known of Allcare's contention that Highmark infringes the '105 patent since on or about April 18, 2002.

5. Allcare is the owner of all right, title and interest in the '105 patent, including the owner of the sole right to enforce said patent and collect royalties and damages associated with the infringement thereof.

6. Allcare provided Highmark over one year's time in which to conduct its evaluation of the '105 patent, discuss the substantive issues associated with Allcare's notification of patent infringement and request for license. This included approximately thirty-five (35) telephone calls, letters and/or email messages between April 16, 2002 and April 3, 2003, relating to various Highmark products, processes, systems and activities that are directly implicated by allowed claims of the '105 patent.

7. Highmark has infringed and continues to infringe the claims of the '105 patent through its products, processes, systems and activities. This infringement is literal, direct infringement, or, in the alternative, infringement under the doctrine of equivalents. Highmark has publicly stated that use of its system reduces the cost of processing claims from $8.38 to "between 25 and 50 cents" per transaction; and it is publicly reported that its system is used by more than 14,000 Highmark-contracted physicians to conduct in excess of 275,000 transactions each month.

8. As shown herein, the past and present cost savings to Highmark associated with its use of the systems and methods covered by the '105 patent exceed $2 million per month.

9. Each claim of the '105 patent is valid and complies with the statutory requirements of patentability as set forth in Title 35 of the United States Code, Sections 101, 102, 103 and 112 (collectively, the "patent act").

10. Highmark, including its counsel, is aware that in the Trigon Action, Trigon asserted unsuccessfully that the claims of the '105 patent were not enabled, are lacking in written description so that the invention of the '105 patent is not adequately described, and/or did not enable any person skilled in the art to which it pertains to use of the invention without undue experimentation. Highmark, including its counsel, is also aware that orders were issued in connection with the Trigon Action holding that the claims of the '105 patent are enabled, are adequately described and do meet the written

description and enablement requirements of the Patent Act.

11. Highmark, including its counsel, is aware that in the Trigon Action, the issue of inequitable conduct associated with the prosecution of the '105 patent was litigated. Furthermore, Highmark, including its counsel, is aware that during the course of the litigation of the inequitable conduct issue, the issues raised in Paragraph 25 of the Complaint were fully and fairly litigated to a conclusion. Highmark, including its counsel, is aware that in the Trigon action, the Court granted summary judgment in favor of Allcare dismissing such inequitable conduct and unenforceability claims, and held that the '105 patent is fully enforceable as a matter of law.

12. Highmark admits that it was aware of the Trigon Action at least as early as May of 2002.

13. From time to time during the pendency of the Trigon Action, counsel for Highmark, which does business under the name Highmark Blue Cross and Blue Shield, communicated with counsel for Trigon, which did business as Trigon Blue Cross Blue Shield.

14. Highmark and Trigon as of May of 2002 were both members of the Blue Cross Blue Shield organization.

15. As such, Highmark and Trigon had common interests associated with the defense of the claim of patent infringement, and a common interest in asserting and attempting to prove that the claims of the '105 patent are invalid and unenforceable.

16. Highmark, through its counsel, attempted to provide assistance to Trigon in the litigation of the Trigon Action. For example, Highmark counsel was

present for the hearings on claim construction, and summary judgment issues, held on January 10, 2003, and was also present at the jury trial of the Trigon Action.

17. In the course of collaborating with Trigon, Highmark provided one or more arguments to Trigon, which Trigon incorporated into its presentation to the Court in the Trigon Action.

18. As a result of its interested participation in the Trigon Action, including assistance provided to Trigon and in fact utilized by Trigon in asserting its defense against a claim of infringement by Allcare, Highmark is bound along with Trigon by the force and effect of the orders and opinions dated February 3, 2003, and issued by the Court in the Trigon Action. These orders include the disposition of various contentions regarding claim construction, infringement, validity and enforceability of the '105 patent.

19. A judicial declaration is necessary and appropriate that the '105 patent is valid and enforceable, and infringed by Highmark.

COUNT I

(Patent Infringement and Declaration Thereof)

20. Allcare incorporates herein by reference Paragraphs 1 through 19 of this Counterclaim as set forth in full herein.

21. Allcare alleges that Highmark makes and uses one or more systems and methods that infringe the claims of the '105 patent. This infringement includes but is not limited to infringement of claims 1-2, 16, 34, 52-53, 55 and 85. Allcare has previously advised Highmark in detail of the nature of the infringement

based upon Highmark's products, processes, systems and activities.

22. As a result of Highmark's past acts of infringement, Allcare is entitled to damages including a reasonable royalty.

23. The infringement in question is of a willful and wanton nature, and as a result, any award of damages should be trebled in accordance with the patent act or otherwise enhanced per the discretion of the Court.

24. The specific facts of this case make the case one of an exceptional nature within the meaning of 35 U.S.C. § 285, giving rise to an award to Allcare of its attorney's fees and costs of litigation.

25. In addition, to the relief specified above, Allcare is entitled to permanent injunctive relief unless and until such time as Highmark has licensed the '105 patent.

PRAYER FOR RELIEF

WHEREFORE Allcare respectfully prays that a trial by jury be had, and that upon entry of final judgment, Highmark take nothing on its Complaint, and judgment be awarded against Highmark and in favor of Allcare on the Complaint and Counterclaim, and that Allcare be awarded damages in the amount of not less than a reasonable royalty, plus attorney's fees and costs of litigation, and that the Court enhance said damages on account of the willfulness shown by Highmark. Moreover, Allcare prays for declaratory judgment that each claim of the '105 patent is valid and enforceable, that the case is exceptional, that Highmark has willfully infringed the '105 patent, and that a permanent injunction be

imposed against Highmark's infringement. Allcare further requests such further relief as the Court deems just and equitable under the circumstances of the case.

This 16 day of December, 2003.

Respectfully submitted,

ALLCARE HEALTH MANAGEMENT SYSTEM, INC.

By */s/ V. Bryan Medlock, Jr.*
Counsel

V. Bryan Medlock, Jr.
Texas Bar No. 13897000
SIDLEY AUSTIN BROWN & WOOD LLP
717 North Harwood, Suite 3400
Dallas, Texas 75201
Telephone: (214) 981-3300
Facsimile: (214) 981-3400

IN THE UNITED STATES DISTRICT COURT
FOR THE NORTHERN DISTRICT OF TEXAS
FORT WORTH DIVISION
CIVIL ACTION NO. 4:03-CV-1384-Y

HIGHMARK, INC.

Plaintiff,

v.

ALLCARE HEALTH
MANAGEMENT SYSTEMS, INC.

Defendant.

Judge: Terry R. MEANS

JOINT STATUS REPORT

On January 5, 2004, counsel for plaintiff Highmark, Inc. ("Highmark") and counsel for defendant Allcare Health Management Systems, Inc. ("Allcare") met via teleconference and held a status conference in accordance with this Court's Order dated December 18, 2003 for the purpose stated therein and for preparing and submitting this Joint Status Report.

(1) **BRIEF STATEMENT OF THE NATURE OF THE CASE**

Plaintiff Highmark's Statement:

This declaratory judgment action was filed on April 3, 2003, and seeks a determination that United States Patent No. 5,301,105 ("the '105 Patent"),

entitled All Care Health Management System, is invalid, unenforceable and not infringed by Highmark. This action was originally brought by Highmark in the United States District Court for the Western District of Pennsylvania at Civil Action No. 03-0462, but in response to Allcare's motion to dismiss this action, was transferred to the Northern District of Texas by Judge Gary L. Lancaster.

In its counterclaim to Highmark's complaint, Allcare has asserted only that Claims 1, 16, 19, 34, 52, 55, and 82 are infringed by Highmark.

Defendant's Position

Claim construction should occur in the order of discovery adopted by this Court in earlier patent infringement cases, thereby permitting the Joint Claim Chart to include all of the claims likely to be at issue. As indicated in Exhibit C, a Joint Claim Chart setting forth element by element the parties' agreements and disagreements on claim construction should be submitted to the Court no later than August 27, 2004.

(b) Summary Judgment

Plaintiff's Position:

Summary judgment motions on claim construction, invalidity and unenforceability should be filed by September 10, 2004.

Other summary judgment briefs should be filed not later than April 30, 2005.

Defendant's Position:

As stated earlier, multiple summary judgment motions should not be permitted. No other matters are now believed relevant to the status of the disposition of the case.

IN THE UNITED STATES DISTRICT COURT
FOR THE NORTHERN DISTRICT OF TEXAS
FORT WORTH DIVISION
CIVIL ACTION NO. 4:03-CV-1384-Y

HIGHMARK, INC.

Plaintiff,

v.

ALLCARE HEALTH
MANAGEMENT SYSTEMS, INC.

Defendant.

INITIAL SCHEDULING ORDER

Pursuant to Fed. R. Civ. P. 16 (b), this Initial Scheduling Order will govern the preparation of this case for trial. The Court, having reviewed the joint status report and proposed discovery plan recently submitted by the parties, establishes the deadlines set out below to ensure that the case is expeditiously prepared for trial.

Accordingly, it is **ORDERED** that:

(1) The parties make the initial disclosures provided for by FED. R. CDT. P. 26(a) (1) in the manner set out in that rule except that the deadline for making such disclosures is hereby extended to **April 11, 2004**;[1]

---

[1] In accordance with local civil rule 5.2(a), these disclosures shall be served on all parties but shall not be filed with the clerk of the Court.

(2) The parties participate in mediation during the month of **May 2004**, in accordance with the Order for Referral to Mediation issued this same day;

(3) The parties file any motions to implead third parties or to join additional parties pursuant to Fed. R. Civ. P. 14 or 19, respectively, by 4:30 p.m. on **May 21, 2004**;

(4) Each party plaintiff file any motions for leave to amend his pleadings no later than 4:30 p.m. on **June 22, 2004**;

(5) Each party defendant file any motions for leave to amend his pleadings no later than 4:30 p.m. on **July 21, 2004**;

(6) No later than 4:30 p.m. on **August 23, 2004**, each party claiming patent infringement serve on all parties a "Proposed Claim-Construction Statement," which shall contain the following information:

(a) identification of any special or uncommon meanings of words or phrases in the claim;

(b) all references from the specification that support, describe, or explain each element of the claim;

(c) all material in the prosecution history that describes or explains each element of the claim; and

(d) any extrinsic evidence that supports the proposed construction of the claim, including, but not limited to, expert testimony, inventor testimony, dictionary definitions, and citations to learned treatises, as permitted by law.

(7) No later than **September 9, 2004**, each party opposing a Proposed Claim-Construction Statement serve on each party a "Response to Proposed Claim-

Construction Statement." The response shall contain the following information:

(a) identification of any special or uncommon meanings of words or phrases in the claim in addition to or contrary to those disclosed pursuant to subparagraph (5) (a), above;

(b) all references from the specification that support, describe, or explain each element of the claim in addition to or contrary to those disclosed pursuant to subparagraph (5)(b), above;

(c) all material in the prosecution history that describes or explains each element of the claim in addition to or contrary to those disclosed pursuant to subparagraph (5)(c), above;

(d) any extrinsic evidence that supports the proposed construction of the claim, including, but not limited to, expert testimony, inventor testimony, dictionary definitions, and citation to learned treatises, as permitted by law.

(8) No later than **September 30, 2004**, the parties meet and confer for the purpose of preparing a "Joint Claim-Construction Statement" in accordance with paragraph (8), below;

(9) No later than 4:30 p.m. on **October 27, 2004**, the parties complete and file a "Joint Claim-Construction Statement," which shall contain the following information:

(a) the construction of those claims and terms on which the parties agree;

(b) each party's proposed construction of each disputed claim and term, supported by the same information that is required under paragraphs (5) and (6).

(10) Each party claiming patent infringement file a motion, under *Markman v. Westview Instruments, Inc.*, 517 U.S. 370 (1996), regarding any issues of patent interpretation identified in the parties' Joint Claim Construction Statement no later than 4:30 p.m. on **November 28, 2004**. Response and reply briefs shall be due as required by the local civil rules;

(11) The parties participate in a formal settlement conference on **a date and at a time and location mutually agreeable to the parties, but in no event later than November 30, 2004**, at which the parties and their counsel shall appear in person[2] to discuss settlement of this case (corporations, partnerships, associations, etc., shall participate through a representative who shall have authority to bargain in good faith). No later than seven (7) days after the date of the settlement conference, each party shall file a brief written report setting out:

(a) The date on which the settlement conference was held,

(b) The persons present,

(c) A statement regarding whether meaningful progress toward settlement was made,

(d) A statement regarding the prospects of settlement before trial;

(e) If the case was not settled, an assessment of whether the case should now be referred to mediation and if not, why not, remembering that pro

---

[2] Upon joint motion of the parties demonstrating good cause, the Court will relieve counsel of the requirement that this meeting be in person.

bono mediation may be available to parties unable to afford it.

(12) All disclosures relating to expert witnesses required by FED. R. Civ. P. 26(a) (2) be made and supplemented in the manner set out in that rule except that the disclosures required by subparagraphs (A) and (B) of Rule 26(a) (2) be made by each party with the burden of proof on an issue no later than either:

(a) the thirtieth day after the deadline for filing *Markman* motions, if no such motions are filed, or

(b) the thirtieth day after the Court's rulings on all *Markman* motions are entered on the docket, if one or more *Markman* motions are filed.

Rebuttal designations shall be made by each party no later than thirty days thereafter. Any motions challenging these designations shall be filed by the deadline for filing pretrial motions established in paragraph twelve of this order;

(13) The parties cease all discovery activity under the Federal Rules of Civil Procedure by 4:30 p.m. on the sixtieth day after service of rebuttal-expert designations as required in paragraph 10, above;[3] and

(14) The parties file all other pretrial and dispositive motions except motions in limine no later than 4:30 p.m. on the thirtieth day after the

---

[3] All discovery must be completed by the ordered date. Parties must serve discovery requests with sufficient lead time to permit opponents to serve timely responses prior to the discovery deadline.

discovery deadline established in paragraph 11, above.

Further, it is **ORDERED** that the parties and their counsel strictly comply with the terms of this initial scheduling order and be on notice that failure to timely comply with this order may result in the imposition of sanctions against the non-complying party or counsel or both.

Near the close of discovery in this case, the Court will issue an order requiring the attendance of lead counsel at a trial-setting conference, at which time a trial date will be chosen.

SIGNED March 19, 2004.

/s/ Terry R. Means
TERRY R. MEANS
UNITED STATES
DISTRICT JUDGE

IN THE UNITED STATES DISTRICT COURT
FOR THE NORTHERN DISTRICT OF TEXAS
FORT WORTH DIVISION
CIVIL NO. 4:03 CV-1384-Y

HIGHMARK, INC.,

Plaintiff,

v.

ALLCARE HEALTH
MANAGEMENT SYSTEMS, INC.,

Defendant.

Judge: Terry R. Means

PROPOSED JOINT CLAIM CONSTRUCTION

And Now, Plaintiff Highmark, Inc., and Defendant Allcare Health Management Systems, Inc., submit their Proposed Joint Claim Construction in accordance with paragraph 9 of this Court's March 19, 2004, Initial Scheduling Order.

Respectfully submitted,

HIGHMARK, INC.

Cynthia E. Kernick
Pennsylvania ID #43912
Robert D. Kucler
Pennsylvania ID #84222
Frederick H. Colen
Pennsylvania ID #21833

REED SMITH LLP
435 Sixth Avenue
Pittsburgh, PA 15219
Telephone: (412) 288-4176
Facsimile:

and

/s/ Craig B. Florence
Craig B. Florence
Texas State Bar No. 07158010
Robert Slovak
Texas State Bar.
No. 24013523
GARDERE WYNNE SEWELL LLP
1601 Elm Street, Suite 3000
Dallas, Texas 75201
Telephone: 214-999-3000
Facsimile: 214-999-4667

ALLCARE HEALTH MANAGEMENT SYSTEMS, INC.

Steve G. Hill, Esq.
HILL, KERTSCHER & WHARTON, LLP
3350 Riverwood Parkway,
Suite 800
Atlanta, Georgia 30339
Telephone: 770-953-0995
Facsimile: 770-953-1358

and

/s/ Joseph F. Cleveland, Jr.
Joseph F. Cleveland, Jr.
Texas State Bar No. 04378900
BRACKETT & ELLIS, P.C.
100 Main Street
Fort Worth, Texas 76102-3090
Telephone: 817-338-1700
Facsimile: 817-870-2265

V. Bryan Medlock, Jr.
SIDLEY AUSTIN BROWN & WOOD LLP
717 North Harwood,
Suite 3400
Dallas, Texas 75201

Dated: October 27, 2004

US Patent No. 5,301,105 (the '105 Patent)
Claim Chart
for the claims being asserted in *Highmark, Inc. v. Allcare Health Management Systems, Inc.*
(Civil No. 4:03 CV-1384-Y)
Joint Claim Construction Statement – October 27, 2004[1]

CLAIM LANGUAGE	JOINT CONSTRU-CTION	PARTIES RESPECTIVE POSITIONS
1. A comprehensive health care management system comprising:	The parties agree that the preamble term ***"comprehensive health care management system"*** is construed as a claim limitation because, *inter alia*, it provides the antecedent basis for the phrase "in said system" of claim	Highmark contends that the term ***"health care management system"*** is properly construed as "the integrated interconnection and interaction of the patient, health care provider, bank or other financial

[1] Allcare has moved this Court for leave to submit additional support for certain of its construction in the nature of expert testimony. If the Court grants Allcare's motion, the parties will submit an amended Joint Claim Construction Statement containing references to such expert testimony and expert support proposed by Highmark.

CLAIM LANGUAGE	JOINT CONSTRU-CTION	PARTIES RESPECTIVE POSITIONS
	element 1(d). The parties also agree that the meaning of the term "***health care***" is "...maintaining and restoration of health by the treatment and prevention of disease, especially by trained and licensed professionals (as in medicine, dentistry, clinical psychology and public health)" based on the definition of the term "health care" in medical dictionaries. However, the parties are unable to agree on the meaning of the terms	institution, utilization reviewer/case manager and employer so as to include within a single system each of the essential elements to provide patients with complete and comprehensive maintaining and restoration of health by the treatment and prevention of disease, especially by trained and licensed professionals and payment therefor," based on the patent Abstract and the '105 patent specification at 1:54-150 and

CLAIM LANGUAGE	JOINT CONSTRU-CTION	PARTIES RESPECTIVE POSITIONS
	"***health care management system***" which appears in the preamble of every claim of the patent and/or the term "***comprehensive health care management system***," which appears in the preamble of many claims of the patent. The parties agree that the word "***comprising***" means "including" and is an open-ended transitional phrase according to well-established patent doctrine.	FIG. 1. Highmark further contends that the modifier "***comprehensive***" is construed as "including or comprehending much, large in scope or content," *see* THE AMERICAN HERITAGE DICTIONARY SECOND COLLEGE EDITION (1982), thus requiring the "health care management system" of Claim 1 to be broad in scope. Allcare disagrees and contends that the limitation of Claim 1 is properly a "***comprehensive***

CLAIM LANGUAGE	JOINT CONSTRU-CTION	PARTIES RESPECTIVE POSITIONS
		health care management system and Allcare urges a construction of "the integrated interconnection and interaction of the patient, health care provider, bank or other financial institution, utilization reviewer/case manager and employer so as to include within a single system each of the essential elements to provide patients with complete and comprehensive maintaining and restoration of health by the treatment and

CLAIM LANGUAGE	JOINT CONSTRU-CTION	PARTIES RESPECTIVE POSITIONS
	"enter factual information into the comprehensive health care management system of the preamble for individuals who are members of a pre-established group." However, the parties disagree as to the proper scope and meaning of such provider office terminals (whether located at a physician's office or at a hospital/clinic). The parties agree that in the context of claim element 1(a), "**data identifying** ...	terminal without processing capacity; FIG. 1 shows Physician Office Terminals 11a-11c remote from processing system 10; FIG. 3 shows Terminals 11a-11c remote from micro processor 60 and other computers 61a; and FIG. 2 shows an exemplary physician Office Terminal as a telephone with magnetic card reader; and (2) dictionaries define the

CLAIM LANGUAGE	JOINT CONSTRU-CTION	PARTIES RESPECTIVE POSITIONS
	persons" is "factual information, such as an identification number, establishing or representing the identity of each of a predetermined plurality of persons." The parties agree that "**data**" is construed as "an item or items of information." *See The American Heritage Dictionary Second College Edition (1985)*; and MICROSOFT PRESS COMPUTER DICTIONARY SECOND	term "***terminal***" as a "device consisting of a video adapter, a monitor, and a keyboard. The adapter and monitor and, sometimes, although less commonly, the keyboard are usually combined in one unit. A terminal does little or no computer processing on its own; instead it is connected to a computer with a communicatio ns link over a cable. Keyboard input is sent

CLAIM LANGUAGE	JOINT CONSTRU-CTION	PARTIES RESPECTIVE POSITIONS
	EDITION (1994). The parties agree that the standard dictionary definition of "***identify***" is "to recognize as being; establish the identity of someone or something." *See e.g., The American Heritage Dictionary Second College Edition (1982).* The parties further agree with *The American Heritage Dictionary Third Edition (1992)* definition of the word "***each***" as "being one of two or more considered	from the computer to the terminal. Terminals are used primarily in multi-user systems and today are not often found on single-user personal computers." *See, e.g.,* MICROSOFT PRESS COMPUTER DICTIONARY SECOND EDITION (1994). Reference is made to FIGS. 1 and 3; and 7:17-21; or Allcare contends the "***input means***" is not limited just to 'dumb' terminals, but rather

CLAIM LANGUAGE	JOINT CONSTRU-CTION	PARTIES RESPECTIVE POSITIONS
	individually; every." The parties also agree that the phrase "***a predetermined plurality of persons***" means "a group of two or more persons determined in advance." In the context of this claim, the parties do not agree whether "each" refers to "every one," as contended by Highmark, or "one of two or more," as contended by Allcare. Accordingly, the parties disagree as to the construction of the phrase "***entering data identifying each***	"include[s] a keyboard and/or monitor for interactive communication with a computer system and a personal computer," because: (1) Allcare's July 25, 1991 Disclosure Statement describes U.S. Patent No. 4,648,037 as disclosing an exemplary "terminal" and such '037 patent, at 3:30-42, defines "terminal," as used herein to include a keyboard and monitor for interactive communica-

CLAIM LANGUAGE	JOINT CONSTRU-CTION	PARTIES RESPECTIVE POSITIONS
	of a predetermined plurality of persons."	tion with a computer system; (2) the dictionary definition of "***terminal***" as being "an instrument through which data or information can enter or leave a computer," *The American Heritage Dictionary Second College Edition (1985)*; (3) the statement in the '105 specification "Terminals 11a-11c may be any of a variety of conventional data input terminals ...

CLAIM LANGUAGE	JOINT CONSTRU-CTION	PARTIES RESPECTIVE POSITIONS
		that provide for pre-recorded card and/or manual data entry input." (*see* 4:10-14; 7:11-16, 23-31); (4) the patent specification's separate references to keyboard (7:25-27) and personal computer (7:46-60); and (5) other dictionaries, including technical dictionaries, define "terminal" as "an input/output device having a keyboard for communicating with a computer, and often a display

CLAIM LANGUAGE	JOINT CONSTRU-CTION	PARTIES RESPECTIVE POSITIONS
		and/or printer" and state that personal computers are examples of terminals (e.g., *Webster's New World Computer Dictionary (9th ed. 2001)* states on p. 363 "A personal computer is a terminal when it is connected to a network, by either a cable or a modem."). Highmark contends "***entering data identifying each of a predetermined plurality of persons***" is construed as the entry of

CLAIM LANGUAGE	JOINT CONSTRU-CTION	PARTIES RESPECTIVE POSITIONS
		data establishing or representing the individual identity of every individual from a group of two or more persons such as those with appropriate insurance or other basis for participation in a health care system." (*see* 8:57-9:33). Allcare contends "***entering data identifying each of a predetermined plurality of persons***" is construed as "the entry of data establishing or representing

CLAIM LANGUAGE	JOINT CONSTRU-CTION	PARTIES RESPECTIVE POSITIONS
		the individual identity of an individual from a group of two or more persons such as those with appropriate insurance or other basis for participation in a health care system." (*see* 8:57-9:33).

CLAIM LANGUAGE	JOINT CONSTRU-CTION	PARTIES RESPECTIVE POSITIONS
(b) a data bank memory interconnected with said input means, said data bank memory including an identification of predetermined procedures requiring utilization review;	The parties agree that claim element 1(b) is construed as "a data bank memory (*i.e.*, a data base or a collection of logically related records and/or files) that is interconnected with the input means, as properly	Highmark contends this database must be connected "physically, electrically and reciprocally to the data input terminal at the health care provider's office" based upon the definition of
	construed, and that includes within its memory a list of preselected procedures requiring utilization review, properly construed." However, the parties disagree as to the meaning of the term "***intercon-***	"***intercon-nected***" which Highmark contends means "physically, electrically and reciprocally connected" based on the technical definition contained in *Webster's New World Dictionary of Computer*

CLAIM LANGUAGE	JOINT CONSTRU-CTION	PARTIES RESPECTIVE POSITIONS
	nected. The parties also disagree on the location and connection of the data bank memory that includes a list of pre-selected procedures requiring utilization review. The parties agree that "***include***" means "to have or take in as a part or member; contain" as defined in *The American Heritage Dictionary Second College Edition (1985)*, and therefore in the context of this Claim, that "***including***" means "taking	*Terms, Third Edition (1988)* ("the physical and electrical connection of equipment furnished by different vendors") and the lay definition contained in *The American Heritage Dictionary, Second College Edition (1982)* ("connecting with one another reciprocally") and FIGs. 1 and 3; and 6:44-54, 7:53-60 and 7:39-47. Further, Highmark cites as support that the specification describes two similar

CLAIM LANGUAGE	JOINT CONSTRU-CTION	PARTIES RESPECTIVE POSITIONS
	in as a part; containing." In addition, the parties agree that the term "***procedures***" includes both medical and surgical procedures. Finally, the parties agree that utilization review may be prospective, concurrent or retrospective. However, they disagree on the construction of the term "***utilization review***,"	embodiments in which a processing system is connected to the input means (physician office terminals) and the necessary data bank memories (*e.g.*, Physician File 44) in Claim 1. In each of these embodiments described in the specification, a "smart system" is used to facilitate the processing steps described below. In the first embodiment(shown in FIG. 1), a "centralized" system is described in which data is input through input means

CLAIM LANGUAGE	JOINT CONSTRU-CTION	PARTIES RESPECTIVE POSITIONS
		(physician office terminals 11a-11c) at the health care provider's office, and is communicated to a remote centralized processor (processing system 10) which is interconnected with a series of data bank memories (including physician file 44) that store the data needed for processing. In the "distributed processing" embodiment of the system shown in FIG. 3, the data bank memories (including

CLAIM LANGUAGE	JOINT CONSTRU-CTION	PARTIES RESPECTIVE POSITIONS
		located at the provider's office, at a centralized location, or in both locations, depending on the language of the claims. As detailed below, Claim 1's use of the term "interconnected " as opposed to "in communication with" (see claim element 1(d)) denotes selection of the distributed processing embodiment of the invention for the purposes of Claim 1. Reference is also made to FIGS. 1 and 3; and 6:44-54, 7:53-60 and 7:39-47.

CLAIM LANGUAGE	JOINT CONSTRU-CTION	PARTIES RESPECTIVE POSITIONS
		Allcare contends this database "may be part of the terminal that provides the input means or part of one or more remote systems to which it may be connected in any of various distributed processing environments." Allcare contends "***interconnected***" means "to be connected one to the other," based on the definition of the term in *The American Heritage Dictionary, Second College Edition (1985)*, and based upon

CLAIM LANGUAGE	JOINT CONSTRU-CTION	PARTIES RESPECTIVE POSITIONS
		the patent specification references to FIG. 1, 4:8-10, 4:35-39, 5:50-57, 6:44-54, FIG. 3, 7:39-41 and 14:52-54.
		Highmark contends "***utilization review***" is "the evaluation of medical necessity and efficiency or quality of health care services, either prospectively, concurrently or retrospectively; contrasted with utilization management in that utilization review is more limited to the physician's

CLAIM LANGUAGE	JOINT CONSTRU-CTION	PARTIES RESPECTIVE POSITIONS
		diagnosis, treatment and billing amounts" whereas utilization management is the process of evaluating the necessity, appropriateness and efficiency of health care services; a review coordinator or medical director gathers information about the proposed hospitalization, service or procedure from the patient and/or provider, then determine whether it meets established guidelines and

CLAIM LANGUAGE	JOINT CONSTRU-CTION	PARTIES RESPECTIVE POSITIONS
		criteria, which may be written or automated protocols approved by the organization." *See* THE MANAGED HEALTH CARE DICTIONARY, at 203 (1996).[2]
		Allcare contends "***utilization review***" is "a review of the medical appropriateness or necessity of care, including but not limited

[2] Highmark has been unable to locate a dictionary dedicated to Managed Health Care terms prior to 1996 and recognizes that the law requires that the Court consider the construction of terms as construed at the time of the issuance of the patent, Intellectual Property Dev., Inc. v. UA Columbia Cablevision of Westchester, Inc., 336 F.3d 1308 (Fed. Cir. 2003) but provides this reference to the extent that it may be beneficial to the understanding of the term "provider."

CLAIM LANGUAGE	JOINT CONSTRU-CTION	PARTIES RESPECTIVE POSITIONS
		to where the review takes place in the form of pre-certification, pre-authorization, referral management, length of stay review, or retrospective review of care" based on: AHM 34593 (Ex. 12, Singer Depo.); *The Managed Health Care Dictionary, p. 251 (1998)*; patent specification at 2:15-18; 2:58-3:12; 3:79; Fig. 9; 13:60-14:4; Examples of criteria for utilization review cited within the patent include

CLAIM LANGUAGE	JOINT CONSTRU-CTION	PARTIES RESPECTIVE POSITIONS
		"any of a variety of factors for review such as Cost 212, Treatment Results 213, Referral Matters 214, Other Opinions 215 and the like." (14:11-15).
(c) payment means; and	The parties agree with *The American Heritage Dictionary, Second College Edition (1982)* definition of the word "***payment***" as "the act of paying what is due or accrued." The parties also agree that the term "***payment means***" is governed by 35	Highmark contends the "***payment means***" "is limited to the structure disclosed in the specification, here specifically electronic funds transfer, together with the identical function specified in the claim (*i.e.*, payment),"

CLAIM LANGUAGE	JOINT CONSTRU-CTION	PARTIES RESPECTIVE POSITIONS
	U.S.C. § 112, paragraph 6, and is "that part of the 'comprehensive health care management system' of the preamble of claim 1 that accomplishes the transmittal of funds for purposes of rendering payment of what is due or owed." However, the parties disagree as to the structure of the "***payment means***."	based on the disclosures in the specification regarding the structure that performs the payment function, including: (1) the statement that "a wide variety of automatic transfer of funds could be employed as between providers, ancillary services, employers, insurance companies and the like" (14:54-57); (2) the
		illustration of FIG. 1 which shows the connection 27a between the Processing

CLAIM LANGUAGE	JOINT CONSTRU-CTION	PARTIES RESPECTIVE POSITIONS
		System 10 and the Banks/ Financial Institutions (27), the connection 25 between the Banks/ Financial Institutions 27 and the insurance companies 24a, 24b, 24c, and the connection 29 between the Banks/ Financial Institutions 27 and the employer 28; and (3) Block 204 of FIG. 8, which describes that "provision is made for transfer to the account of the health provider

CLAIM LANGUAGE	JOINT CONSTRU-CTION	PARTIES RESPECTIVE POSITIONS
		(*e.g.*, the attending physician, clinic or the like) of the approved sums for such claims," which transfer can be accomplished in a variety of ways as identified in FIG. 1 (13:45-54).
		Allcare contends the "***payment means***" "includes both electronic funds transfer (as asserted by Highmark above) and 'a variety of medical payment systems' as known in the prior art, for performing the

CLAIM LANGUAGE	JOINT CONSTRU-CTION	PARTIES RESPECTIVE POSITIONS
		function of 'payment,'" based on the '105 patent specification at 1:14-19, and the specific references to U.S. Patent 4,491,725 to Pritchard (1982) and U.S. Patent No. 4,858,121 to Barber, *et al.* (1986) as examples of known medical payment systems and which pay claims by automating a check/remit-tance, wire transfer or by creating an EFT file.

CLAIM LANGUAGE	JOINT CONSTRU-CTION	PARTIES RESPECTIVE POSITIONS
(d) means in communication with said input means responsive to input of data through said input means symbolic of symptoms of one of said predetermined plurality of persons for tentatively identifying a proposed mode of treatment for said one of said predetermined plurality of persons and, when said proposed mode of treatment includes one of said predetermined procedures requiring utilization	The parties agree that this element (or integral portions thereof) is governed by 35 U.S.C. § 112, paragraph 6, and is limited to the structure disclosed in the specification and its equivalents. The parties further agree that claim element 1(d) is construed as "a computer system in communication with the input means, properly construed, responding or replying to the entry of one or more items of information	**HIGHMARK'S PROPOSED CONSTRUC-TION:** Claim element 1(d) is construed as a "smart system" comprised of a processor and the Physician File, such "smart system," receiving data from and transferring data to, the input means (construed as in claim element 1(a)) and capable of performing the following three defined tasks: (1) provision-ally identifying a proposed treatment (*i.e.*,

CLAIM LANGUAGE	JOINT CONSTRU-CTION	PARTIES RESPECTIVE POSITIONS
review, for producing indicia indicative thereof and for preventing payment therefore by said payment means until said utilization review has been obtained and data indicative thereof has been entered in said system.	through the input means, which computer system is capable of performing at least three tasks." However, the parties disagree as to the identification of the three tasks and the structure necessary to carry out such tasks.	a suggested application of remedies for a disease or injury) for one member of the pre-established group made in response to the entry of data symbolic of patient symptoms received through the input means;
		(2) identifying those proposed treatments that require utilization review and producing indicia that such utilization review is required; and

CLAIM LANGUAGE	JOINT CONSTRU-CTION	PARTIES RESPECTIVE POSITIONS
		identification of commonly encountered diseases and other ailments; (2) the symp-toms associated with such diseases and ailments; (3) approved and/or recommended treatment protocols (procedures) to remedy such diseases or ailments; and (4) an identi-fication of those procedures requiring utilization review and/or second opinions.
		SUPPORT:
		This element is a means-plus-function limitation and

CLAIM LANGUAGE	JOINT CONSTRU-CTION	PARTIES RESPECTIVE POSITIONS
		is governed under Section 112(6). It is limited to the structure disclosed in the specification and its equivalents, together with the identical functions specified in the claim element (see below). It thus covers only a single means or structure that, in accordance with the specification is limited to a "smart system" (FIG. 1, Smart System 21; 5:7-9; 6:11-26; 6:55 to 7:2; 9:56-65 and 10:18-39) performing three separate but required

CLAIM LANGUAGE	JOINT CONSTRU-CTION	PARTIES RESPECTIVE POSITIONS
		functions: 1) tentatively identifying a proposed mode of treatment (6:57-65) (e.g., a "diagnostic smart system"); 2) determining when one of these predetermined treatments requires utilization review and producing an indicia indicative thereof (6:65 to 7:2), and 3) preventing payment (*i.e.*, preventing

CLAIM LANGUAGE	JOINT CONSTRU-CTION	PARTIES RESPECTIVE POSITIONS
		the electronic transfer of funds) for the identified treatments identified by the system (through "indicia indicative thereof") as requiring utilization review until said utilization review is performed and an indication of the completion of the utilization review is entered into the system.

CLAIM LANGUAGE	JOINT CONSTRU-CTION	PARTIES RESPECTIVE POSITIONS
		The phrase "***means in communication with said input means responsive to input of data through said input means symbolic of symptoms of one of said predetermined plurality of persons***" is construed to mean a processor "smart system" transferring information to the input means and responding to the receipt of information entered through the input means which information pertains to the subjective

CLAIM LANGUAGE	JOINT CONSTRU-CTION	PARTIES RESPECTIVE POSITIONS
		evidence of disease for any one member of or designated group's members as perceived by the patient and expressed in symbolic or representative manner.
		<u>Support</u>: This construction is supported by the specification which states "if symptoms are entered into the system terminal (*e.g.*, one of terminals 11*a*-11*c*), and an identification of the corresponding

CLAIM LANGUAGE	JOINT CONSTRU-CTION	PARTIES RESPECTIVE POSITIONS
		illness is requested from the Processing System 10, the physician's file is inter-rogated, and the system prepares a list of the most likely medical condition corresponding to such symptoms, together with the generally approved and/or recommended treatment protocols," (6:59-67); and "By this is contemplated the entry of symptoms and other data which can assist in making a

CLAIM LANGUAGE	JOINT CONSTRU-CTION	PARTIES RESPECTIVE POSITIONS
		diagnosis and identifying the aforemen-tioned recommended treatment protocols. Thus, the physician is assisted in correlating the observed patient symptoms and test results so as to identify the most likely causes of the health problems, complete his diagnosis, and prescribe the most appropriate treatment protocols." (9:57-65).

CLAIM LANGUAGE	JOINT CONSTRU-CTION	PARTIES RESPECTIVE POSITIONS
		"***communi-cation***" is understood by one skilled in the art to involve "data transfer from one computer to another through a communicatio ns medium, such as a telephone, microwave relay, a satellite link, or a physical cable."
		See MICROSOFT PRESS COMPUTER DICTIONARY, SECOND EDITION (1994); *accord* WEBSTER'S NEW WORLD DICTIONARY OF COMPUTER

CLAIM LANGUAGE	JOINT CONSTRU-CTION	PARTIES RESPECTIVE POSITIONS
		TERMS, THIRD EDITION (1988). "***in communica-tion with***" is the receipt or exchange of data via a modern. (7:47 - 50). "***input means***" and "***data***" are construed as in claim element 1(a). "***responsive***" is construed as "answering or replying; responding." See THE AMERICAN HERITAGE DICTIONARY THIRD EDITION (1992).

CLAIM LANGUAGE	JOINT CONSTRU-CTION	PARTIES RESPECTIVE POSITIONS
		"***input***" - "Information entered into a computer for processing, as from a keyboard or from a file stored on a disk drive. Normally used as a noun or an adjective, the word is often also used as a verb meaning to enter information." *Microsoft Press Computer Dictionary, Second Edition (1994).*
		"***data . . . symbolic of symptoms***" is construed as "information expressed in symbolic or representative

CLAIM LANGUAGE	JOINT CONSTRU-CTION	PARTIES RESPECTIVE POSITIONS
		manner pertaining to the subjective evidence of disease or changes in the physical condition of a patient." **Support**:
		"***symbolic***" is construed as "of, or pertaining to, or expressed by means of a symbol or symbols"; *i.e.*, something that represents something else by association, resemblance, or convention. *See* AMERICAN HERITAGE DICTIONARY, SECOND COLLEGE

CLAIM LANGUAGE	JOINT CONSTRU-CTION	PARTIES RESPECTIVE POSITIONS
		EDITION (1982).
		"***symptoms***" is construed as "any subjective evidence of disease or of a patient's condition; *i.e.*, any evidence as perceived by the patient; a noticeable change in a patient's condition indicative of some bodily or mental state." *See* DORLAND'S ILLUSTRATED MEDICAL DICTIONARY 28TH EDITION (1994).
		"***one of said predetermined plurality of persons***" is

CLAIM LANGUAGE	JOINT CONSTRU-CTION	PARTIES RESPECTIVE POSITIONS
		and care of a group member's disease or disorder."
		Support:
		"*for*" is construed as "used to indicate the object, aim, or purpose of an action or activity." THE AMERICAN HERITAGE DICTIONARY SECOND COLLEGE EDITION (1982)
		The phrase "*tentatively identifying*" is construed to mean "provisionally selecting." "*tentatively*" is

CLAIM LANGUAGE	JOINT CONSTRU-CTION	PARTIES RESPECTIVE POSITIONS
		construed as being done in manner that is "based on or consisting in trial or experimentation; made or done provisionally." *See* WEBSTER'S NEW TWENTIETH CENTURY DICTIONARY UNABRIDGED SECOND EDITION (1982)
		"***identify***" means "to recognize as being; establish the identity of someone or something." *The American Heritage Dictionary Second College Edition (1982)*

CLAIM LANGUAGE	JOINT CONSTRU-CTION	PARTIES RESPECTIVE POSITIONS
		and as defined in claim element 1(a).
		"***A proposed mode of treatment***" is construed as "a suggested method of the management and care of a patient to combat disease or injury."
		"***proposed***" is construed as "to put forward for consideration, discussion, or adoption; suggest." See THE AMERICAN HERITAGE DICTIONARY SECOND COLLEGE EDITION (1982) and THE AMERICAN

CLAIM LANGUAGE	JOINT CONSTRU-CTION	PARTIES RESPECTIVE POSITIONS
		HERITAGE DICTIONARY THIRD EDITION (1992).
		"***mode***" is construed as the "manner, way, or method of doing or acting." *See* THE AMERICAN HERITAGE DICTIONARY SECOND COLLEGE EDITION (1982).
		"***treatment***" is construed as "the management and care of a patient for the purpose of combating disease or disorder." *See* DORLAND'S ILLUSTRATED

CLAIM LANGUAGE	JOINT CONSTRU-CTION	PARTIES RESPECTIVE POSITIONS
		MEDICAL DICTIONARY 28TH EDITION (1994); also, "a suggested application of remedies for a disease or injury." *See* THE AMERICAN HERITAGE DICTIONARY SECOND COLLEGE EDITION (1982). Admini-stration or application of remedies to a patient or for a disease or an injury; medicinal or surgical management; therapy." *The American Heritage Dictionary Third Edition*

CLAIM LANGUAGE	JOINT CONSTRU-CTION	PARTIES RESPECTIVE POSITIONS
		(1992).
		"***predetermined procedures requiring utilization review***" is construed as in claim element 1(b).
		"***means ... for producing indicia thereof***" is construed as "a processor programmed to display a sign or indication that utilization review is required for a proposed treatment."
		Support "***indicia***" is construed as "signs; characteristic marks; indications;

CLAIM LANGUAGE	JOINT CONSTRU-CTION	PARTIES RESPECTIVE POSITIONS
		tokens." See WEBSTER'S NEW TWENTIETH CENTURY DICTIONARY UNABRIDGED SECOND EDITION (1982).
		"***means ... for preventing payment therefor by said payment means until said utilization review has been obtained and data indicative thereof has been entered in said system***" is construed to mean a structure for "stopping the electronic transfer of funds for

CLAIM LANGUAGE	JOINT CONSTRU-CTION	PARTIES RESPECTIVE POSITIONS
		services rendered by a provider until the quality control review for cost effectiveness has occurred and an identifying mark indicating such utilization review is put into the comprehensive health care management system."
		Support: The specification does not refer to a structure for "preventing" payment but rather only refers to structures for making

CLAIM LANGUAGE	JOINT CONSTRU-CTION	PARTIES RESPECTIVE POSITIONS
		payment. *See* 3:22-26 and 14:54-57. This claim element thus fails to particularly point out and distinctly claim the invention and is invalid under Section 112(2).
		"***indicative***" is construed as "signifying." *See* WEBSTER'S NEW TWENTIETH CENTURY DICTIONARY UNABRIDGED SECOND EDITION (1982). "***prevent***" is construed as "to stop or keep from doing some-

CLAIM LANGUAGE	JOINT CONSTRU-CTION	PARTIES RESPECTIVE POSITIONS
		thing; to keep from happening; to make impossible by prior action." *See* WEBSTER'S NEW TWENTIETH CENTURY DICTIONARY UNABRIDGED SECOND EDITION (1982). "***payment***" is construed as in claim element 1(c); "***utilization review***" is construed as in claim element 1(b); and "***enter***" is construed as in claim element 1(a).
		"***obtain***" is construed as "to get possession of, especially by

CLAIM LANGUAGE	JOINT CONSTRU-CTION	PARTIES RESPECTIVE POSITIONS
		trying; to procure." See WEBSTER'S NEW TWENTIETH CENTURY DICTIONARY UNABRIDGED SECOND EDITION (1982).
		ALLCARE'S PROPOSED CONSTRUC-TION:
		As to the proper construction of claim element 1(d), Allcare contends as follows:
		"***Communi-cation***" is understood by one skilled in the art to involve "data transfer from one computer to another through a

CLAIM LANGUAGE	JOINT CONSTRUCTION	PARTIES RESPECTIVE POSITIONS
		communications medium, such as a telephone, microwave relay, a satellite link, or a physical cable." *See* MICROSOFT PRESS COMPUTER DICTIONARY, SECOND EDITION (1994); *accord* WEBSTER'S NEW WORLD DICTIONARY OF COMPUTER TERMS, THIRD EDITION (1988).
		"***In communication with***" refers to the receipt or exchange of data. Allcare contends that, in addition to the exchange or transfer of data

CLAIM LANGUAGE	JOINT CONSTRU-CTION	PARTIES RESPECTIVE POSITIONS
		via modems, relying upon 7:47-50, the '105 patent applies to the exchange or transfer of data via "conventional communication paths," relying upon 4:10, and "communication links," relying on 5:51-52.
		"***input means***" and "***data***" are construed as in claim element 1(a).
		"***Symbolic***" is construed as "of, or pertaining to, or expressed by means of a symbol or symbols;" *i.e.*, something that

CLAIM LANGUAGE	JOINT CONSTRU-CTION	PARTIES RESPECTIVE POSITIONS
		represents something else by association, resemblance, or
		convention. *See* AMERICAN HERITAGE DICTIONARY, SECOND COLLEGE EDITION (1982).
		"***Tentatively***" means "Not fully worked out, concluded or agreed on; provisional" *The American Heritage Dictionary Third Edition (1992).*
		"***A proposed mode of treatment***" is construed as "a suggested method of the management and care of a

CLAIM LANGUAGE	JOINT CONSTRU-CTION	PARTIES RESPECTIVE POSITIONS
		patient to combat disease or injury" or "a suggested method of the application of remedies to a patient for a disease or injury."
		"***Propose***" - "To put forward for consideration, discussion, or adoption; suggest" *The American Heritage Dictionary Third Edition (1992).*
		"***Proposed***" is construed as "put forward for consideration, discussion, or adoption; suggest." *See* "THE AMERICAN HERITAGE

CLAIM LANGUAGE	JOINT CONSTRU-CTION	PARTIES RESPECTIVE POSITIONS
		DICTIONARY SECOND COLLEGE EDITION (1982).
		"***Mode***" is construed as the "manner, way, or method of doing or acting." *See* THE AMERICAN HERITAGE DICTIONARY SECOND COLLEGE EDITION (1982).
		"***Treatment***" is construed as "the management and care of a patient for the purpose of combating disease or disorder." *See* DORLAND'S ILLUSTRATED MEDICAL DICTIONARY

CLAIM LANGUAGE	JOINT CONSTRU-CTION	PARTIES RESPECTIVE POSITIONS
		28TH EDITION (1994); "a suggested application of remedies for a disease or injury." *See* THE AMERICAN HERITAGE DICTIONARY SECOND COLLEGE EDITION (1982).
		"Administration or application of remedies to a patient or for a disease or an injury; medicinal or surgical management; therapy" *The American Heritage Dictionary Third Edition (1992).*

CLAIM LANGUAGE	JOINT CONSTRU-CTION	PARTIES RESPECTIVE POSITIONS
		"***Predetermined procedures requiring utilization review***" is construed as in claim element 1(b).
		"***Indicative***" is construed as "signifying." *See* WEBSTER'S NEW TWENTIETH CENTURY DICTIONARY UNABRIDGED SECOND EDITION (1982).
		"***Prevent***" is construed as "to stop or keep from doing something; to keep from happening; to make impossible by prior action."

CLAIM LANGUAGE	JOINT CONSTRU-CTION	PARTIES RESPECTIVE POSITIONS
		See WEBSTER'S NEW TWENTIETH CENTURY DICTIONARY UNABRIDGED SECOND EDITION (1982). "***Payment***" is construed as in claim element 1(c); "***utilization review***" is construed as in claim element 1(b); and "***enter***" is construed as in claim element 1(a).
		"***Obtain***" is construed as "to get possession of, especially by trying; to procure." *See* WEBSTER'S NEW TWENTIETH CENTURY DICTIONARY UNABRIDGED

CLAIM LANGUAGE	JOINT CONSTRU-CTION	PARTIES RESPECTIVE POSITIONS
		SECOND EDITION (1982).
		"***Symptoms***" is construed as "*Med. A* phenomenon
		experienced by an individual as a departure from normal function, sensation or appearance, generally indicating disorder or disease." *The American Heritage Dictionary Second College Edition (1985)* "A sign or an indication of disorder or disease, especially when experience by an individual as a change from

CLAIM LANGUAGE	JOINT CONSTRU-CTION	PARTIES RESPECTIVE POSITIONS
		normal function, sensation, or appearance" *The American Heritage Dictionary Third Edition (1992).* "***For***" is construed as "with a view to, as concerns, corresponding to." WEBSTER'S NEW WORLD DICTIONARY, COLLEGE EDITION (1964).
		"***Tentatively identifying***" means recognizing or establishing provisionally, bases upon the agreed definition of "tentatively and the following

CLAIM LANGUAGE	JOINT CONSTRU-CTION	PARTIES RESPECTIVE POSITIONS
		definition of "identify:" "***Identify***" — to recognize as being; establish the identity of someone or something. *The American Heritage Dictionary Second College Edition (1985).*
		"***Tentatively identifying a proposed mode of treatment***" is illustrated by 11:32-50, wherein the system provisionally recognized an incoming proposed treatment proposal from a physician, and then applies its rules or logic

CLAIM LANGUAGE	JOINT CONSTRU-CTION	PARTIES RESPECTIVE POSITIONS
		(the "criteria check") to the proposed treatment. See also 10:3-5: 11:5-10: 14:18-23.
		Claim element 1(d) is properly construed as a distributed computer system or its equivalent in communication with the input means, properly construed, responding or replying to the input of one or more items of information representative of a sign of disorder or disease through the input means of Claim element 1(a),

CLAIM LANGUAGE	JOINT CONSTRU-CTION	PARTIES RESPECTIVE POSITIONS
		which system includes at least three components: (1) a "means ... for tentatively identifying a proposed mode of treatment," which is either: (i) a utilization review or procedure approval smart system, as disclosed in 6:13-25, 10:3-17, and 11:32-50; or (ii) a diagnostic smart system, as disclosed in 6:56-67 and 9:53-65; and
		2) a "means ... for producing indicia indicative [of

CLAIM LANGUAGE	JOINT CONSTRU-CTION	PARTIES RESPECTIVE POSITIONS
		the fact that a proposed mode of treatment includes a procedure that has been pre-selected for utilization review]," which is software capable of causing a monitor or printer associated with the system to provide an indication of the need for utilization review when the suggested method of treatment for a disease or injury includes a pre-selected medical service, treatment and/or testing procedure that

CLAIM LANGUAGE	JOINT CONSTRU-CTION	PARTIES RESPECTIVE POSITIONS
		requires utilization review, as properly construed above; and
		(3) a "means... for preventing payment therefore by said payment means until said utilization review has been obtained..." which is, either: (1) a computer programmed in accordance with the algorithm provided in Figure 8 (with accompanying text at 13:34-40), that is used to review the contents of a claim for accuracy, and where a

CLAIM LANGUAGE	JOINT CONSTRU-CTION	PARTIES RESPECTIVE POSITIONS
		problem with accuracy of the codes on the claim form prompts an off-line adjudication procedure; or (ii) a "medical payment system," which is a specially programmed computer capable of keeping payment from happening as the result of the automated processing of a medical claim and such as was available commercially prior to 1991.
		The structure disclosed in the '105 patent specification

CLAIM LANGUAGE	JOINT CONSTRU-CTION	PARTIES RESPECTIVE POSITIONS
		corresponding to this element comprises a single hardware structure (*e.g.*, a distributed computer system) with separate software components included thereon, each component of which performs a distinct software-based function based on the corresponding portions of the patent specification (as enumerated below) for each of three functions. These are:

CLAIM LANGUAGE	JOINT CONSTRU-CTION	PARTIES RESPECTIVE POSITIONS
		(1) The first function is "entry through the input means of data symbolic of patient symptoms for provisionally identifying a proposed mode of treatment (*e.g.*, entry of something that is suggestive of patient health or condition for the purpose of identifying a suggested application of remedies for a disease or injury) for one member of a pre-established group."
		The particular "something" that is entered and that is

CLAIM LANGUAGE	JOINT CONSTRU-CTION	PARTIES RESPECTIVE POSITIONS
		suggestive of "**data symbolic of patient *symptoms***" is "Any information, coded or otherwise, indicating the presence of disorder or disease, such as a patient's health, reason for visit or condition, that is relevant to diagnosis and treatment by a care provider, including but not limited to ICD disease codes," as indicated in the patent specification at 9:53-65; 10:66-11:4 and 11:32-40.

CLAIM LANGUAGE	JOINT CONSTRU-CTION	PARTIES RESPECTIVE POSITIONS
		Allcare states that ICD codes are illustrative examples of data symbolic of patient symptoms (*See International Classification of Disease, vol. 1 and 2*), they are data symbolic of patient symptoms, as shown in the provisions of 11:32-50 as it relates to the entry of data symbolic of patient symptoms into the system.
		Based upon *The American Heritage Dictionary Second College Edition (1982)* definitions of

CLAIM LANGUAGE	JOINT CONSTRU-CTION	PARTIES RESPECTIVE POSITIONS
		the term "***proposed***" as "put forward for consideration, discussion or adoption;" and "***mode***" as being the "manner, way, or method of doing or acting," the meaning of the term "***proposed mode of treatment***," is construed as"...one or more ways of medically or surgically treating a patient that is put forward for consideration, discussion or adoption."
		The patent specification discloses at least two

CLAIM LANGUAGE	JOINT CONSTRU-CTION	PARTIES RESPECTIVE POSITIONS
		alternative structures capable of performing the function of "***tentatively identifying a proposed mode of treatment***," namely:
		(i) a utili-zation review or procedure approval smart system, as disclosed in 6:13-25, 10:3-17, and 11:32-50; or
		(ii) a diag-nostic smart system, as disclosed in 6:56-67 and 9:53-65.
		(2) The second function is "producing indicia

CLAIM LANGUAGE	JOINT CONSTRU-CTION	PARTIES RESPECTIVE POSITIONS
		indicating when one of these pre-determined treatments, properly construed, requires utilization review, properly construed."
		As used herein, the term "***indicia***" means "identifying mark(s) or indication(s)" and that the term "***means ... for producing indicia thereof*** "is construed as "a processor programmed to display one or more identifying marks or indications signifying that

CLAIM LANGUAGE	JOINT CONSTRU-CTION	PARTIES RESPECTIVE POSITIONS
		utilization review is required for a proposed treatment." Thus, this portion of claim element 1(d) may be construed as "causing a monitor or printer associated with the system to provide one or more identifying marks or indications signifying the need for utilization review, properly construed, when the suggested method of treatment for a disease or injury includes

CLAIM LANGUAGE	JOINT CONSTRU-CTION	PARTIES RESPECTIVE POSITIONS
		a pre-selected medical service, treatment and/or testing procedure that requires utilization review, as properly construed."
		The '105 patent specification discloses multiple structures for the "***means ... for producing indicia thereof***," including:
		(i) a convent-ional printer capable of printing out reports in hard copy form, as disclosed in the patent specification at 7:65-68,

CLAIM LANGUAGE	JOINT CONSTRU-CTION	PARTIES RESPECTIVE POSITIONS
		FIG. 1 and FIG. 3(13); and (ii) a monitor screen for displaying visual display or review of data, as disclosed in the patent specification at 7:63-65, FIG. 1(14) and FIG. 3(66). *See also* 11:46, 60 (noting the visual display of the need for further checking, or review).
		(3) The third component of claim element 1(d) is "preventing payment by the

CLAIM LANGUAGE	JOINT CONSTRU-CTION	PARTIES RESPECTIVE POSITIONS
		payment means, as properly construed, for the treatments identified by the system as requiring utilization review until said utilization review, properly construed, has been performed and an indication of the completion of utilization review having been performed has been entered into the system."
		Allcare disagrees that claim element 1(d) is invalid under Section 112(2) due to any lack of

CLAIM LANGUAGE	JOINT CONSTRU-CTION	PARTIES RESPECTIVE POSITIONS
		disclosed structure for "preventing payment." To the contrary, the patent specification discloses at least two alternative structures capable of performing this task, namely:
		(i) a computer programmed in accordance with the algorithm provided in FIG. 8 (with accompanying text at 13:34-40), that is used to review the contents of a claim for accuracy, and

CLAIM LANGUAGE	JOINT CONSTRU-CTION	PARTIES RESPECTIVE POSITIONS
		where a problem with accuracy of the codes on the claim form prompts an off-line adjudication procedure; or
		(ii) a "medical payment system," which is a specially programmed computer capable of keeping payment from happening as the result of the automated processing of a medical claim and such as was available commercially prior to 1991,"

CLAIM LANGUAGE	JOINT CONSTRU-CTION	PARTIES RESPECTIVE POSITIONS
		as disclosed in U.S. Patent 4,491,725 to Pritchard (1982) and U.S. Patent No. 4,858,121 to Barber, *et al* (1986), both of which references are specifically identified as being a known medical payment systems of the prior art at 1:14-19 of the '105 patent specification.
52. A method of managing a comprehensive health care management system utilizing a data processor, data bank memories,	The parties agree that claim 52 uses certain terms that are in common with terms used elsewhere in claim 1. The parties also	Highmark contends Claim 52 is the method claim equivalent to Claim 1 and that all of the claim terms used in Claim

CLAIM LANGUAGE	JOINT CONSTRU-CTION	PARTIES RESPECTIVE POSITIONS
input means and payment means comprising:	agree that identical terms should be construed the same way regardless of the claim in which they appear. To that extent, the parties incorporate by reference the earlier contentions and provisions of this chart as it pertains to the definitions of terms already identified in earlier claims. The parties agree that the term "***managing***" is construed as "directing or administering" and accordingly	52 that are identical to those used in Claim 1 must have an identical meaning to those terms as used in Claim 1 thus it is appropriate to incorporate herein all of Highmark's pertinent arguments made with to those corresponding claim terms of Claim 1. Allcare contends that Claim 52 is an independent claim the construction of which should be without reference to any extraneous

CLAIM LANGUAGE	JOINT CONSTRU-CTION	PARTIES RESPECTIVE POSITIONS
	that Claim 52 and the subordinate claims thereto pertain to "directing or administering a comprehensive health care management system." The parties also agree that the meaning of the term "***health care***" is "...maintaining and restoration of health by the treatment and prevention of disease, especially by licensed professionals (as in medicine, dentistry, clinical psychology and public health)" based on the	claim limitations included in Claim 1, but not present in Claim 52 (e.g., "intercon-nected," "in communication with," "responsive to," and the means plus function limitations of Claim element 1(d) not expressed in a format governed by 35 U.S.C. 112, 6th paragraph in Claim element 52(c) or 52(d)). Highmark contends that the term "***health care management system***" is properly construed as

CLAIM LANGUAGE	JOINT CONSTRU-CTION	PARTIES RESPECTIVE POSITIONS
	definition of the term "health care" in medical dictionaries such as DORLAND'S ILLUSTRATED MEDICAL DICTIONARY 28TH EDITION (1994). However, the parties are unable to agree on the meaning of the terms "***health care management system***" which appears in the preamble of every claim of the patent and/or the term" ***comprehensive health care management system***," which appears in the preamble of	"the integrated interconnection and interaction of the patient, health care provider, bank or other financial institution, utilization reviewer/case manager and employer so as to include within a single system each of the essential elements to provide patients with complete and comprehensive maintaining and restoration of health by the treatment and prevention of disease, especially by trained and licensed

CLAIM LANGUAGE	JOINT CONSTRU-CTION	PARTIES RESPECTIVE POSITIONS
	many claims of the patent. The parties agree that the preamble term elements "***data processor***," "***data bank memories***," "***input means***" and "***payment means***," properly construed, are all claims limitations. In this regard, the parties agree that the term "***data processor***" is construed as a "device or system capable of performing operations upon data to achieve a desired goal, such as a central processing unit	professionals and payment therefor," based on the patent Abstract and the '105 patent specification at 1:54-60 and FIG. 1. Highmark further contends that the modifier "***comprehend-sive***" is construed as "including or comprehending much, large in scope or content," *see* THE AMERICAN HERITAGE DICTIONARY SECOND COLLEGE EDITION (1982), thus requiring the "health care management system" of

CLAIM LANGUAGE	JOINT CONSTRUCTION	PARTIES RESPECTIVE POSITIONS
	(CPU) or the use of one or more computers, *e.g.*, personal computer, mainframe, central processing system, microprocessor or the like." In addition, the parties agree that the term "***data***" means "an item or items of information;" "***data bank***" means "a repository of data; data base" and "***data bank memories***" means "data repositories, meaning that portion of the computer used to store the	Claim 1 to be broad in scope. Allcare disagrees and contends that the limitation of Claim 1 is properly a ***"comprehensive health care management system"*** and Allcare urges a construction of" the integrated interconnection and interaction of the patient, health care provider, bank or other financial institution, utilization reviewer/case manager and employer so as to include within a single system each of the essential

CLAIM LANGUAGE	JOINT CONSTRU-CTION	PARTIES RESPECTIVE POSITIONS
	data bank or data base collection of logically related records or files." The parties agree that the term "***input means***" is governed by 35 U.S.C. § 112, paragraph 6, and includes "a physician office terminal"; and agree, in the context of claim element 1(a), that at least one of the functions of such "input means" is to "enter factual information into the comprehensive health care management system of the preamble for individuals who	elements to provide patients with complete and comprehensive maintaining and restoration of health by the treatment and prevention of disease, especially by trained and licensed professionals and payment therefor," based on the patent Abstract and the '105 patent specification at1:54-60 and FIG. 1. Highmark contends the "***input means***" "is limited to a 'dumb' terminal," because: (1) all three of

CLAIM LANGUAGE	JOINT CONSTRU-CTION	PARTIES RESPECTIVE POSITIONS
	are members of a pre-established group." However, the parties disagree as to the proper scope and meaning of such provider office terminals (whether located at a physician's office or at a hospital/clinic). The parties also agree that the comprehensive health care management system of claim 52 must include a "***payment means***;" and agree that this term is governed by 35 U.S.C. § 112, paragraph 6,	the figures that depict the Physician Office Terminals 11a-11c, show the terminal as a "dumb" terminal without processing capacity (FIG. 1 shows Physician Office Terminals 11a-11c remote from processing system 10; FIG. 3 shows Terminal 11a-11c remote from micro processor 60 and other computers 61a; and FIG 2 shows an exemplary physician

CLAIM LANGUAGE	JOINT CONSTRU-CTION	PARTIES RESPECTIVE POSITIONS
	and includes "that portion of the 'comprehensive health care management system,' as properly construed, that enables the transmittal of funds for the purpose of rendering payment for what is due or owed." However, the parties disagree as to the structure of the "***payment means***": The parties agree that the word "***comprising***" means "including," and is an open-ended	Office Terminal as a telephone with magnetic card reader); and (2) dictionaries define the term "terminal" as a "device consisting of a video adapter, a monitor, and a keyboard. The adapter and monitor and, sometimes, although less commonly, the keyboard are usually combined in one unit. A terminal does little or no computer processing on its own; instead it is connected to a computer with a

CLAIM LANGUAGE	JOINT CONSTRU-CTION	PARTIES RESPECTIVE POSITIONS
	transitional phrase according to well-established patent doctrine.	communication s link over a cable. Keyboard input is sent from the computer to the terminal. Terminals are used primarily in multi-user systems and today are not often found on single-user personal computers." *See, e.g.*, MICROSOFT PRESS COMPUTER DICTIONARY SECOND EDITION (1994). Reference is made to FIGS. 1 and 3; and 7:17-21. Allcare contends the "***input means***" *is not* limited

CLAIM LANGUAGE	JOINT CONSTRU-CTION	PARTIES RESPECTIVE POSITIONS
		just to 'dumb' terminals, but rather "...include[s] a keyboard and/or monitor for interactive communication with a computer system and a personal computer," because: (1) Allcare's July 25, 1991 Disclosure Statement describes U.S. Patent No. 4,648,037 as disclosing an exemplary "terminal" and such '037 patent, at 3:30-42, defines "terminal," as used herein to include a keyboard and monitor for

CLAIM LANGUAGE	JOINT CONSTRU-CTION	PARTIES RESPECTIVE POSITIONS
		interactive communication with a computer system; (2) the dictionary definition of "terminal" as being "an instrument through which data or information can enter or leave a computer" *The American Heritage Dictionary Second College Edition (1985)*; (3) the statement in the '105 specification "Terminals 11a-11c may be any of a variety of conventional

CLAIM LANGUAGE	JOINT CONSTRU-CTION	PARTIES RESPECTIVE POSITIONS
		data input terminals ... that provide for pre-recorded card and/or manual data entry input." (*see* 4:10-14); (4) the patent specification's separate references to keyboard (7:25-27) and personal computer (7:46-60); and (5) other dictionaries, including technical dictionaries, define "terminal" as "an input/output device having a keyboard for communicating with a

CLAIM LANGUAGE	JOINT CONSTRU-CTION	PARTIES RESPECTIVE POSITIONS
		computer, and often a display and/or printer" and at least one technical dictionary states that personal computers are examples of terminals (e.g., *Webster's New World Computer Dictionary (9th ed. 2001)* states on p. 363 "A personal computer is a terminal when it is connected to a network, by either a cable or a modem."). Highmark contends the ***"payment means"*** "is limited to the structure

CLAIM LANGUAGE	JOINT CONSTRU-CTION	PARTIES RESPECTIVE POSITIONS
		disclosed in the specification, here specifically electronic funds transfer, together with the identical function specified in the claim (*i.e.*, payment)," based on the disclosures in the specification regarding the structure that performs the payment function: (1) the statement that "a wide variety of automatic transfer of funds could be employed as between providers, ancillary services,

CLAIM LANGUAGE	JOINT CONSTRU-CTION	PARTIES RESPECTIVE POSITIONS
		employers, insurance companies and the like" (14:54-57); (2) the illustration of FIG. 1 which shows the connection 27a between the Processing System 10 and the Banks/Financial Institutions (27), the connection 25 between the Banks/ Financial Institutions 27 and the insurance companies 24a, 24b, 24c, and the connection 29 between the Banks/ Financial

CLAIM LANGUAGE	JOINT CONSTRU-CTION	PARTIES RESPECTIVE POSITIONS
		Institutions 27 and the employer 28; and (3) Block 204 of FIG. 8, which describes that "provision is made for transfer to the account of the health provider (e.g., the attending physician, clinic or the like) of the approved sums for such claims" which transfer can be accomplished in a variety of ways as identified in FIG. 1 (13:45-54); or Allcare contends the "**payment means**" "... includes both

CLAIM LANGUAGE	JOINT CONSTRU-CTION	PARTIES RESPECTIVE POSITIONS
		electronic funds transfer (as asserted by Highmark above) *and* 'a variety of medical payment systems' for performing the function of 'payment,'" based on the '105 patent specification at 1:14-19, and the specific references to U.S. Patent 4,491,725 to Pritchard (1982) and U.S. Patent No. 4,858,121 to Barber, *et al* (1986) as examples of medical payment systems and which pay

CLAIM LANGUAGE	JOINT CONSTRU-CTION	PARTIES RESPECTIVE POSITIONS
		claims by automating a check/remit-tance, wire transfer or by creating an EFT file.

CLAIM LANGUAGE	JOINT CONSTRU-CTION	PARTIES RESPECTIVE POSITIONS
(a) entering into said data processor data identifying each of a prede-termined plurality of persons;	The parties agree that "**entering**" *is* "*the act* or process of inputting information"; and that claim element 52(a) is construed to be the "step of introducing or inputting information such as an identification number into the data processor of the preamble." The parties agree that in the context of claim element 52(a), "*data identifying ... persons*" is "factual information, such as an	Highmark contends "***entering data identifying each of a predetermined plurality of persons***" is construed as "the entry of data establishing or representing the individual identity of every individual from a group of two or more persons such as those with appropriate insurance or other basis for participation in a health care system." *(see* 8:57-9:33). Allcare contends "***entering data identifying each***

CLAIM LANGUAGE	JOINT CONSTRU-CTION	PARTIES RESPECTIVE POSITIONS
	identification number, establishing or representing the identity of "each of a predetermined plurality of persons," as properly construed. The parties further agree with *The American Heritage Dictionary Third Edition (1992)* definition of the word "***each***" as "being one of two or more considered individually; every." The parties also agree that the phrase "***a predetermined plurality of persons***" means	***of a predetermined plurality of persons***" is construed as "the entry of data establishing or representing the individual identity of an individual from a group of two or more persons such as those with appropriate insurance or other basis for participation in a health care system." *(see* 8:57-9:33).

CLAIM LANGUAGE	JOINT CONSTRU-CTION	PARTIES RESPECTIVE POSITIONS
	"a group of two or more persons determined in advance." In the context of this claim, the parties do not agree on whether "each" refers to "every one," as contended by Highmark, or "one of two or more," as contended by Allcare. Accordingly, the parties disagree on the construction of the phrase "***entering data identifying each of a predetermined plurality of persons***."	

CLAIM LANGUAGE	JOINT CONSTRU-CTION	PARTIES RESPECTIVE POSITIONS
(b) entering into one of said data bank memories an identi-fication of predetermined procedures requiring utilization review;	The parties agree that claim element 52(b) is construed to mean the "step of introducing or inputting into one of the data bank memories of the preamble an identification of preselected procedures, properly construed, that require utilization review, properly construed." The parties agree that the term "***identification***" in the context of this claim element means: "anything by which a person or thing can be identified *(i.e.,*	Highmark contends "***utilization review***" is "the evaluation of medical necessity and efficiency or quality of health care services, either prospectively, concurrently or retrospectively; contrasted with utilization management in that utilization review is more limited to the physician's diagnosis, treatment and billing amounts" whereas utilization management is the process of evaluating the necessity,

CLAIM LANGUAGE	JOINT CONSTRU-CTION	PARTIES RESPECTIVE POSITIONS
	can be shown to be a certain person or thing) or the state of being identified," based on *Webster's New Twentieth Century Dictionary Unabridged, Second Edition (1982)* and the patent specification at 4:57-62; 6:56-59 and 6:61-72. In addition, the parties agree that the term "***procedures***" includes both medical and surgical procedures. Although the parties agree that utilization review may be prospective,	appropriateness and efficiency of health care services; a review coordinator or medical director gathers infor-mation about the proposed hospitalization, service or procedure from the patient and/or provider, then determine whether it meets established guidelines and criteria, which may be written or automated protocols approved by the organization." *See* THE MANAGED HEALTH CARE DICTIONARY, at 203 (1996).

CLAIM LANGUAGE	JOINT CONSTRU-CTION	PARTIES RESPECTIVE POSITIONS
	concurrent or retrospective, they disagree on the construction of the term "***utilization review***."	Allcare contends "***utilization review***" is "a review of the medical appropriateness or necessity of care, including but not limited to where the review takes place in the form of pre-certification, pre-authorization, referral management, length of stay review, or retrospective review of care." AHM 34593 (Ex. 12, Singer Depo.); *The Managed Health Care Dictionary, p. 251 (1998); patent*

CLAIM LANGUAGE	JOINT CONSTRU-CTION	PARTIES RESPECTIVE POSITIONS
		specification at 2:15-18; 2:58-3:12; 3:7-9; Fig. 9; 13:60-14:4; Examples of criteria for utilization review cited with the patent include "any of a variety of factors for review such as Cost 212, Treatment Results 213, Referral Matters 214, Other Opinions 215 and the like." (14:11-15).

CLAIM LANGUAGE	JOINT CONSTRU-CTION	PARTIES RESPECTIVE POSITIONS
(c) entering through said input means into said data processor data symbolic of patient symptoms for tentatively identifying a proposed mode of treatment and, when said proposed mode of treatment includes one of said predetermined procedures requiring utilization review, producing indicia indicative thereof; and	The parties agree that claim element 52(c) is construed to be the "step of introducing or inputting one or more items of information through a physician's office terminal, as properly construed," but disagree as to the scope of "***data symbolic of patient symptoms for tentatively identifying a proposed mode of treatment***": The parties agree with *The American Heritage Dictionary Second College Edition (1982)* definitions of	Highmark contends "***data symbolic of patient symptoms for tentatively identifying a proposed mode of treatment***" is exclusively limited to "information expressed in symbolic or representative manner pertaining to the subjective evidence of disease or changes in the physical condition of a patient/group member into the processor "smart system" so that the "smart system" may respond by provisionally

CLAIM LANGUAGE	JOINT CONSTRU-CTION	PARTIES RESPECTIVE POSITIONS
	the term "***proposed***" as "put forward for consideration, discussion or adoption;" and "***mode***" as being the "manner, way, or method of doing or acting." The parties further agree that the term "***treatment***" is construed as in Claim 1 and on this basis, agree that the term "***proposed mode of treatment***" means "one or more ways of medically or surgically treating a patient that is put forward for consideration,	selecting a suggested method for the management and care of the patient/group member's disease or disorder," as described with respect to the corresponding portions of Claim 1. Allcare contends "***data symbolic of patient symptoms for tentatively identifying a proposed mode of treatment***" is not exclusively limited to the foregoing, but also refers to data "input into the system manually by the physician or

CLAIM LANGUAGE	JOINT CONSTRU-CTION	PARTIES RESPECTIVE POSITIONS
	discussion or adoption." The parties also agree that the phrase "***when said proposed mode of treatment includes one of said predetermined procedures requiring utilization review, producing indicia indicative thereof*** is construed as "when one or more ways of medically or surgically treating a patient that is put forward for consideration, discussion or adoption includes a pre-	a member of the physician's staff as being representative of something that indicates the presence of disorder or disease with a view toward, as concerns or corresponding to, provisionally putting forth a suggested method of the application of remedies or therapies to a patient for a disease or injury," based on the patent specification (*e.g.*, 10:3-5 and 11:32-40), and also as is characteristic of a smart system for utilization review/procedur

CLAIM LANGUAGE	JOINT CONSTRU-CTION	PARTIES RESPECTIVE POSITIONS
	selected treatment that requires utilization review, as properly construed, the system causes to exist a sign, indication or identifying mark indicating that utilization review is required for such proposed treatment."	e approval such as is described in 2:34, 6:13-25, 10:3-17 or 11:32-50. Allcare further contends that only 11:32-50 describes the operation of claim element 52(c) in its entirety.
(d) preventing payment therefor by said payment means until said utilization review has been obtained and data indicative thereof has been entered in said system.	The parties agree that "***indicative***" is construed as "signifying" and that "***prevent***" means "to stop or keep from doing something; to keep from happening; to make impossible by	Plaintiff Highmark contends the specification does not refer to a structure for "preventing" payment but rather only refers to structures for making payment *(See* 3:22-26 and

CLAIM LANGUAGE	JOINT CONSTRU-CTION	PARTIES RESPECTIVE POSITIONS
	prior action." The parties also agree that claim element 52(d) is construed to mean the "step of keeping the payment means, as properly construed, from rendering payment for services rendered by a provider until utilization review, properly construed, has occurred and one or more items of information indicating that utilization review, properly construed, has occurred is	14:54-57); and accordingly this claim element fails to particularly point out and distinctly claim the invention and is thereby invalid under Section 112, ¶2; Defendant Allcare contends that the specification does refer to structure that provides payment prevention in: (a) the algorithm provided in Figure 8 (with accompanying text at 13:34-40), which is used in the computer system to

CLAIM LANGUAGE	JOINT CONSTRU-CTION	PARTIES RESPECTIVE POSITIONS
	introduced into the comprehensive healthcare management system." The parties disagree whether "this claim element fails to particularly point out and distinctly claim the invention and therefore whether or not the claim is invalid under 35 U.S.C. § 112, paragraph 2."	program the system to review the contents of a claim for accuracy, where a problem with accuracy of the codes on the claim form prompts an off-line adjudication procedure in such an event; and (b) the "medical payment system," which is a specially programmed computer capable of keeping payment from happening as the result of the automated processing of a medical claim.

CLAIM LANGUAGE	JOINT CONSTRU-CTION	PARTIES RESPECTIVE POSITIONS
		Moreover, assuming *arguendo* the '105 patent specification lacks structure for preventing payment, as Highmark contends, Allcare contends that does not make the claim invalid pursuant to 35 U.S.C. § 112, paragraph 2.
53. A method of managing a health care management system according to claim 52 in which the step of tentatively identifying a proposed mode of treatment further includes	In addition to including all of the limitations of claim 52, the parties agree that the added limitation of claim 53 is that the "step of 'tentatively identifying a proposed mode of treatment,' as	Highmark contends "***providing***" is construed as "to furnish, supply," based on THE AMERICAN HERITAGE DICTIONARY, SECOND COLLEGE

CLAIM LANGUAGE	JOINT CONSTRU-CTION	PARTIES RESPECTIVE POSITIONS
checking said proposed mode of treatment and when said proposed mode of treatment includes an ancillary service, producing indicia indicative thereof and providing said ancillary service.	properly construed, further includes the steps of:' (i) examining or verifying said proposed mode of treatment; and (ii) when said proposed mode of treatment includes an ancillary service, properly construed, producing an indication thereof and providing said ancillary service," where the term "***an ancillary service***" means "one of the totality of supporting services that are needed to	EDITION (1982). Highmark contends "***providing said ancillary service***" means "the ancillary service is furnished or provided by the system," based on the corresponding structure disclosed in the specification. The specification provides support for the provision by the health care management system of ancillary services as follows: (1) "the System accesses its aforemen-

CLAIM LANGUAGE	JOINT CONSTRU-CTION	PARTIES RESPECTIVE POSITIONS
	support total health. Such services include those of pharmacists, prosthesis providers, dentists optometrists, audiologists and other medical specialists, laboratories and the like." However, the parties disagree as to the construction of "***providing***" in the context of claim 53. The parties also disagree on the construction of the claim term "***providing said ancillary service.***"	tioned data bank to ascertain the identity of any approved ancillary provider (*e.g.*, pharmacy as indicated by rectangle 149 [of FIG. 7]) and then automatically transmits the order and indicia (rectangle 150) identifying the medication to such ancillary provider as a basis for the provider to prepare the indicated medication." (12:44-59); and (2) "the System services by examining data and information

CLAIM LANGUAGE	JOINT CONSTRU-CTION	PARTIES RESPECTIVE POSITIONS
		relating to each participant (patient) as noted by rectangle 222 (sic) [of FIG. 10] and calls such need to the attention of the attending physician or other designated authority. In the absence of entry to the contrary, the System communicates the need appropriately as described above to the indicated ancillary identifies the need for ancillary service, examples of which are Specialists 221,

CLAIM LANGUAGE	JOINT CONSTRU-CTION	PARTIES RESPECTIVE POSITIONS
		Dentists 222, Pharmacists 223 for Medications, Suppliers of Prostheses 224, and any others as represented by rectangle 225." (14:28-38). Allcare contends that "***providing***" is construed as "to give (someone) or arrange for (someone) to have (something which is useful or desirable or which they will need)" based on the *Cambridge International Dictionary of English (2001);* "to furnish, supply; to make ready; prepare,

CLAIM LANGUAGE	JOINT CONSTRU-CTION	PARTIES RESPECTIVE POSITIONS
		to make available; afford" based on *The American Heritage Dictionary Second College Edition (1985).* Allcare contends "***providing said ancillary service***" means "giving or arranging for the ancillary services, including by (a) an automated system, medical director or other suitable person indicating that payment will be made for a particular ancillary service as an approved treatment protocol or part of an approved

CLAIM LANGUAGE	JOINT CONSTRU-CTION	PARTIES RESPECTIVE POSITIONS
		treatment protocol, such that the service is available and affordable; or (b) a provider electronically communicating a request for an ancillary service (such as a referral to a medical specialist) using the computer system, such that the service is readied or prepared," based, respectively, on the patent specification at 11:37-12:59, and 10:35-53; 12:33-59; FIG. 10; 14:24-38; FIG. 7 and 12:60-13:9.
102. A method of managing an	The parties agree that	Highmark contends

CLAIM LANGUAGE	JOINT CONSTRU-CTION	PARTIES RESPECTIVE POSITIONS
integrated health care management system having input means, payment means and memory storage comprising:	claim 102 uses certain terms that are in common with terms used elsewhere in claims 1, 52 and 53. The parties also agree that identical terms should be construed the same way regardless of the claim in which they appear. To that extent, the parties incorporate by reference the earlier contentions and provisions of this chart as it pertains to the definitions of terms already identified in earlier claims.	"***integrated***" means "whole or complete" (as in "to make whole or complete by adding or bringing together parts"; "to put or bring (parts) together into a whole; to unify."), based on THE AMERICAN HERITAGE DICTIONARY SECOND COLLEGE EDITION (1982).
	The parties	Allcare contends "***integrated***" means "a harmonious computer system resulting from the process of putting various components

CLAIM LANGUAGE	JOINT CONSTRU-CTION	PARTIES RESPECTIVE POSITIONS
	agree that the term "***managing***" is construed as "directing or administering" and accordingly that claim 102 pertains to "directing or administering an integrated health care management system." The parties also agree that the preamble term "***integrated health care management system***" is construed as a claim limitation because, *inter alia*, it provides the antecedent basis for the phrase "said system" of claim elements	together to form a harmonious computer system," based on the definition of the term "integrate" in *Webster's New World Computer Dictionary (1988).* Highmark contends that the term ***"health care management system"*** is properly construed as "the integrated interconnection and interaction of the patient, health care provider, bank or other financial institution, utilization

CLAIM LANGUAGE	JOINT CONSTRU-CTION	PARTIES RESPECTIVE POSITIONS
	102(e) and 102(g). The parties also agree that the meaning of the term "***health care***" is "...maintaining and restoration of health by the treatment and prevention of disease, especially by trained and licensed professionals (as in medicine, dentistry, clinical psychology and public health)" based on the definition of the term "health care" in medical dictionaries. The parties also agree that within the context of claim	reviewer/case manager and employer so as to include within a single system each of the essential elements to provide patients with complete and comprehensive maintaining and restoration of health by the treatment and prevention of disease, especially by trained and licensed professionals and payment therefor," based on the patent Abstract and the '105 patent specification at 1:54-60 and FIG. 1. Allcare

CLAIM LANGUAGE	JOINT CONSTRU-CTION	PARTIES RESPECTIVE POSITIONS
	102, the term "***memory storage***" means "the facilities of a computer or computer system that store and permit retrieval of data, including internal and external storage devices such as hard disks, floppy disks, tape drives and memories (RAM/ROM)" based on the technical definitions of such term and the patent specification at 4:30-39. The parties agree that the preamble term elements "***input means,***"	disagrees and contends that the limitation of claim 102 is properly an "***integrated health care management system***" and Allcare urges a construction of such term as "an harmonious computer system for directing or administering maintaining and restoration of health by the treatment and prevention of disease, especially by trained and licenses professionals, which integrates (*i.e.*, puts various components

CLAIM LANGUAGE	JOINT CONSTRU-CTION	PARTIES RESPECTIVE POSITIONS
	"***payment means***" and "***memory storage***," properly construed, are all claims limitations. The parties also agree that the terms "***input means***" and "***payment means***" are governed by 35 U.S.C. § 112, paragraph 6, and have the same meanings in claim 102 as set forth with respect to claims 1 and 52. However, the parties disagree on the construction of the term "***integrated***" in the context of claim 102.	together to form a harmonious computer system that includes) physicians, medical care facilities, patients, insurance companies and/or other health care payers, employers and banks and/or other financial institutions.," based on *Webster's* 1988 dictionary definition of the word ***"integrated"*** and the patent specification at 1:8-11.

CLAIM LANGUAGE	JOINT CONSTRU-CTION	PARTIES RESPECTIVE POSITIONS
	In addition, the parties are unable to agree on the meaning of the terms "***health care management system***" and/or "***integrated health care management system***" in the context of claim 102.	
(a) storing through said input means into said memory storage personal health profile data for each of a predetermined plurality of persons;	The parties agree that claim element 102(a) is construed to be the "step of transmitting or depositing health profile data, properly construed, through the physician's office terminal, as properly construed above, into the computer	Highmark contends "***personal health profile data for each of a predetermined plurality of persons***" means "summaries of information pertaining to significant characteristics of the physical, mental and social well-

CLAIM LANGUAGE	JOINT CONSTRU-CTION	PARTIES RESPECTIVE POSITIONS
	system's memory and making such information available for retrieval." The parties also agree that *The American Heritage Dictionary Third Edition (1992)* defines the word "***each***" as "being one of two or more considered individually; every," but disagree on the construction, within the context of claim 102 of the phrase "***personal health profile data for each of a predetermined plurality of***	being of every individual person in a pre-established group of individuals," based on the definitions of "personal" ("of or pertaining to a particular person" *see*, THE AMERICAN HERITAGE DICTIONARY SECOND COLLEGE EDITION (1982)); "health" as construed in the preambles of Claims 1, 52 and 102; and "profile" ("a graph, table, or other summary representing quantitatively a set of characteristics subject to tests,"

CLAIM LANGUAGE	JOINT CONSTRU-CTION	PARTIES RESPECTIVE POSITIONS
	persons." The parties agree that such health profile data, properly construed, for each of a predetermined plurality of persons, properly construed, is stored in a computer storage facility that is logically or physically connected with the system.	*see* DORLAND'S ILLUSTRATED MEDICAL DICTIONARY, 28TH EDITION (1994) and "a short, vivid biography, briefly outlining the most outstanding characteristics of the subject."). Allcare contends "***personal health profile data for each of a predeter-mined plurality of persons***" means "one or more items of information about one of a group of two or more persons such as those with appropriate insurance or

CLAIM LANGUAGE	JOINT CONSTRU-CTION	PARTIES RESPECTIVE POSITIONS
		other basis for participation in a health care system that may be useful to understanding said person's health," where the information in question may be useful to understanding a patient's health, including but not limited to information relating to the patient's health history, information relating to the patient's history of use of health care services, results from physical examinations of the patient such as the

CLAIM LANGUAGE	JOINT CONSTRU-CTION	PARTIES RESPECTIVE POSITIONS
		patient's height, weight, age, sex, and habits affecting the body (*e.g.*, smoker, drinker) based on several alternative dictionary definitions and the patent specification at 8:18-23; FIG. 4 (72-76) and 11:32-36.
(b) storing into said memory storage symptoms and treatment data for each of a predetermined plurality of health profiles and problems;	The parties agree that claim element 102(b) is construed to be the "step of transmitting or depositing symptoms and treatment information into the computer's memory and making such	Plaintiff Highmark contends that the ***"storing"*** of "symptoms and treatment data" into the "memory storage" defines a process for setting up the diagnostic "smart system" from claim element 1(d)

CLAIM LANGUAGE	JOINT CONSTRU-CTION	PARTIES RESPECTIVE POSITIONS
	information available for retrieval." The parties disagree about the actual meaning of the term "***symptoms and treatment data for each of a predetermined plurality of health profiles and problems***."	based on the discussion provided in the specification about the diagnostic "smart system" (found in claim 1(d)) at 6:55-59: ("In accordance with the "Smart System" characteristics of the invention, Physician File 44 preferably will include an identification of the most commonly encountered disease and ailments, together with symptoms usually associated therewith."). Highmark contends "***symptoms and***

CLAIM LANGUAGE	JOINT CONSTRU-CTION	PARTIES RESPECTIVE POSITIONS
		treatment data for each of a predetermined plurality of health profiles and problems means "subjective evidence of disease or of a patient's condition; (*i.e.*, any evidence perceived by the patient and/or a noticeable change in the patient's condition indicative of some bodily or mental state) and remedies applied to the cure of a disease or disorder for every one of a pre-established group of summaries of information

CLAIM LANGUAGE	JOINT CONSTRU-CTION	PARTIES RESPECTIVE POSITIONS
		pertaining to significant characteristics of physical, mental and social well-being" and health situations that present uncertainty, perplexity or difficulty" based on several dictionary definitions. For example, Highmark contends that "***health profiles and problems***," *i.e.*, "health profiles and health problems" is construed as "a summary of information pertaining to significant characteristics

CLAIM LANGUAGE	JOINT CONSTRU-CTION	PARTIES RESPECTIVE POSITIONS
		of physical, mental and social well-being and health situations that present uncertainty, perplexity or difficulty." <u>Support</u>: "***health profile***" is construed as in Claim element 102(a). "***problem***" is construed as "a situation that presents uncertainty, perplexity, or difficulty." *See* THE AMERICAN HERITAGE DICTIONARY SECOND COLLEGE EDITION (1982). Defendant

CLAIM LANGUAGE	JOINT CONSTRU-CTION	PARTIES RESPECTIVE POSITIONS
		Allcare contends that the phrase ***"symptoms and treatment data for each of a predetermined plurality of health profiles and problems" is defined*** in accordance with the meaning of its constituent terms, which Allcare defines as follows: ***Symptoms and treatment data:*** Information about things that indicate the presence of a disease or physical disorder, and about the action or manner of treating a patient medically or

CLAIM LANGUAGE	JOINT CONSTRU-CTION	PARTIES RESPECTIVE POSITIONS
		surgically. "***Symptoms***" is construed as "A sign or an indication of disorder or disease, especially when experienced by an individual as a change from normal function, sensation, or appearance" *The American Heritage Dictionary Third Edition 1992).* "***Treatment***" is construed as "the management and care of a patient for the purpose of combating a disease or disorder." *See* DORLAND'S

CLAIM LANGUAGE	JOINT CONSTRU-CTION	PARTIES RESPECTIVE POSITIONS
		ILLUSTRATED MEDICAL DICTIONARY 28TH EDITION (1994); "a suggested application of remedies for a disease or injury." *See* THE AMERICAN HERITAGE DICTIONARY SECOND COLLEGE EDITION (1982). "Admini-stration or application of remedies to a patient or for a disease or an injury; medicinal or surgical management; therapy" *The American Heritage Dictionary Third Edition (1992).*

CLAIM LANGUAGE	JOINT CONSTRU-CTION	PARTIES RESPECTIVE POSITIONS
		"Data," "each," "predeter-mined," and ***"plurality"*** are construed as in claim element 1(a). Health ***problem:*** an illness, disease, health-impairing incident or other condition negatively impacting the health of the patient, or that is known to increase the likelihood of illness or disease (2:40-42; 6:6-7; 9:63) ***Predetermined plurality of health profiles:*** Summaries presenting the most notable characteristics for persons

CLAIM LANGUAGE	JOINT CONSTRUCTION	PARTIES RESPECTIVE POSITIONS
		determined, decided or established in advance; a comprehensive history of the use of health care services for persons determined, decided or established in advance. ***Profile:*** a set of data exhibiting the significant features of something. *Merriam-Webster's Medical Desk Dictionary (1996).* A summary, brief account or record. *Stedman's Medical Dictionary (27th Edition, Online).* "A

CLAIM LANGUAGE	JOINT CONSTRU-CTION	PARTIES RESPECTIVE POSITIONS
		summary, graph or table presenting the subject's most notable characteristics; a comprehensive history of the use of health care services." *Taber's Cyclopedic Medical Dictionary* (2001); ***Predetermined plurality of health ... problems:*** illnesses, diseases, health-impairing incidents and/or potentially health-destructive conditions known to lead to illness or

CLAIM LANGUAGE	JOINT CONSTRU-CTION	PARTIES RESPECTIVE POSITIONS
		disease (2:40-42; 6:6-7; 8:22-23) determined, decided or established in advance. Allcare further notes that the patent specification speaks of the flexibility of the system to permit its user, such as an insurer or employer, to tailor the system to the organization's needs. (4:53-5:8; 5:32-38; 6:19-25) Exhibit 1 (items 19-20) and accompanying text at 4:63-5:8 illustrates the storage of health care claims made on

CLAIM LANGUAGE	JOINT CONSTRU-CTION	PARTIES RESPECTIVE POSITIONS
		behalf of the insured persons of a health care insurance company. This reference exemplifies the system's storage of information (such as is normally recorded on a per claim basis) about things indicating the presence of a disease or physical disorder, and about the action or manner of treating a patient medically or surgically for each of a predetermined plurality of health profiles

CLAIM LANGUAGE	JOINT CONSTRU-CTION	PARTIES RESPECTIVE POSITIONS
		and problems. Allcare contends "***symptoms and treatment data for each of a predetermined plurality of health profiles and problems***" means "information about things indicating the presence of a disorder or disease and the action or manner of treating a patient medically or surgically for each of (i) summaries presenting the most notable characteristics for persons determined, decided or

CLAIM LANGUAGE	JOINT CONSTRU-CTION	PARTIES RESPECTIVE POSITIONS
		established in advance or a comprehensive history of the use of health care services for persons determined, decided or established in advance; and (ii) certain illnesses, diseases, health-impairing incidents and/or potentially health-destructive conditions known to lead to illness or disease determined, decided or established in advance," based on the patent specification at 2:40-42; 4:63-5:8; 6:6-7; 8-22-23; 9:63 and

CLAIM LANGUAGE	JOINT CONSTRU-CTION	PARTIES RESPECTIVE POSITIONS
		FIG. 1 (19-20).

CLAIM LANGUAGE	JOINT CONSTRU-CTION	PARTIES RESPECTIVE POSITIONS
(c) storing in said memory storage criteria for identifying treatments requiring utilization review;	The parties agree that claim element 102(c) is construed to be the "step of transmitting or depositing certain criteria into the computer's memory and making such information available for retrieval." The parties also agree that the term "***criteria***" is construed as "standards, rules or tests on which a judgment or decision can be based" *(see The American Heritage Dictionary Second College Edition (1982))*	

CLAIM LANGUAGE	JOINT CONSTRU-CTION	PARTIES RESPECTIVE POSITIONS
	and agree that the criteria for identifying treatments requiring utilization review, properly construed, is stored in a computer storage facility that is interconnected with the system. The parties further agree that the term "***treatment***" is construed as in Claim 1 and on the foregoing basis agree that the term "***criteria for identifying treatments requiring utilization review***" means "one or more	

CLAIM LANGUAGE	JOINT CONSTRU-CTION	PARTIES RESPECTIVE POSITIONS
	standards, rules or tests for determining which ways of medically or surgically treating a patient require utilization review, properly construed."	
(d) storing in said memory storage criteria for identifying treatments requiring second opinions;	The parties agree that claim element 102(d) is construed to be the "step of transmitting or depositing criteria identifying treatments requiring second opinions into the computer's memory and making such information available for retrieval." The parties also	

CLAIM LANGUAGE	JOINT CONSTRU-CTION	PARTIES RESPECTIVE POSITIONS
	agree that the term "***second opinion***" means "an independent evaluation of a condition of a patient by a provider other than the provider originally making a recommend-ation." The parties agree that the term "***criteria***" is construed as "standards, rules or tests on which a judgment or decision can be based" (*see The American Heritage Dictionary Second College Edition (1982)*) and agree that	

CLAIM LANGUAGE	JOINT CONSTRU-CTION	PARTIES RESPECTIVE POSITIONS
	the term "***treatment***" is construed as in Claim 1. Additionally, the parties agree that the criteria for identifying treatments requiring second opinions, properly construed, is stored in a computer storage facility that is interconnected with the system. Accordingly, the parties agree that the term "***criteria for identifying treatments requiring second opinions***" means "one or	

CLAIM LANGUAGE	JOINT CONSTRU-CTION	PARTIES RESPECTIVE POSITIONS
	more standards, rules or tests for determining which ways of medically or surgically treating a patient require an independent evaluation of a condition of a patient by a provider other than the provider originally making a recommend-ation."	
(e) entering into said system information identifying a proposed medical treatment for one of said plurality of persons;	The parties agree that claim element 102(e) is construed to be the "step of placing, introducing or inserting information identifying a proposed medical	Highmark contends "***information identifying a proposed medical treatment***" is construed as "knowledge confirming a proposed remedy for a

CLAIM LANGUAGE	JOINT CONSTRU-CTION	PARTIES RESPECTIVE POSITIONS
	treatment into the system of claim 102," but disagree on the construction of the phrase "***information identifying a proposed medical treatment***."	disease for one member of the pre-established group," based on several dictionary definitions. For example, Highmark's contends that "***information***" is construed as "knowledge derived from study, experience, or instruction." *See* AMERICAN HERITAGE DICTIONARY, SECOND COLLEGE EDITION (1982), and "***medical***" is construed as "pertaining to medicine or to the treatment of diseases; pertaining to medicine as opposed to

CLAIM LANGUAGE	JOINT CONSTRU-CTION	PARTIES RESPECTIVE POSITIONS
		surgery." *See* DORLAND'S ILLUSTRATED MEDICAL DICTIONARY 28TH EDITION (1982). It is commonly understood even by lay persons as "of or pertaining to the study or practice of medicine; requiring medical as distinct from surgical treatment." *See* THE AMERICAN HERITAGE DICTIONARY SECOND COLLEGE EDITION (1982). Allcare contends "***information identifying a proposed medical treatment***" is construed as "...one or more

CLAIM LANGUAGE	JOINT CONSTRU-CTION	PARTIES RESPECTIVE POSITIONS
		items of data commonly understood to signify a suggested remedy or therapy to a patient for a disease or injury for one of a group of two or more persons," as based on dictionary definitions and the patent specification at 10:3-5; 10:68-11:3; 11:11-31 and 11:32-36.
(f) identifying whether or not said proposed medical treatment requires utilization review; and	The parties agree that claim element 102(f) is construed to be the "step of ascertaining whether the information identifying a step 102(e)	Highmark contends "***identifying***" is construed as "applying rules," as in claim element 1(a). Allcare

CLAIM LANGUAGE	JOINT CONSTRU-CTION	PARTIES RESPECTIVE POSITIONS
	proposed mode of treatment, properly construed, requires utilization review, as properly construed above," but disagree on the construction of the term "***identifying***" in the context of claim element 102(f).	contends "***identifying***" is construed as "...establishing or recognizing," based upon the word 'identify' in the 1982 *American Heritage Dictionary* definition.
(g) preventing said system from approving payment for said proposed medical treatment if said proposed medical treatment requires utilization review until such utilization	The parties agree that the term "***approving***" is construed to mean "confirming or consenting to officially; sanctioning; or ratifying," (*See American Heritage Dictionary,*	Highmark contends claim element 102(g) is construed as "The step of stopping the integrated health care management system from utilizing the payment means (of the preamble of

CLAIM LANGUAGE	JOINT CONSTRU-CTION	PARTIES RESPECTIVE POSITIONS
review has been conducted.	*Second College Edition (1982))* but disagree on the construction of claim element 102(g).	claim 102) to pay what is due or accrued for a suggested remedy for a disease if the suggested remedy for a disease requires utilization review, as properly construed above, until such time as said utilization review has been completed." Allcare contends claim element 102(g) is construed as "In the event that the suggested remedy or therapy to a patient for a disease or injury

CLAIM LANGUAGE	JOINT CONSTRU-CTION	PARTIES RESPECTIVE POSITIONS
		suggested in the step of claim element 102(e) requires utilization review, as properly construed above, keeping the system from sanctioning compensation for said suggested remedy or therapy until said utilization review, as properly construed above, has been carried out."

IN THE UNITED STATES DISTRICT COURT
FOR THE NORTHERN DISTRICT OF TEXAS
FORT WORTH DIVISION
CIVIL NO. 4:03 CV-1384-Y

HIGHMARK, INC.

Plaintiff,

v.

ALLCARE HEALTH
MANAGEMENT SYSTEMS, INC.

Defendant.

Judge: Terry R. Means

DECLARATION OF ROBERT H. SHELTON

1. My name is Robert H. Shelton. I am over 21 years old, have never been convicted of a felony, and am fully competent to make this declaration. I have personal knowledge of the matters set forth herein and know them to be true and correct.

2. I am a Director and the Vice President, Licensing, for Allcare Health Management System, Inc. ("Allcare"), the Defendant in the above-styled and numbered action. Allcare is a Virginia corporation based in Fort Worth, Texas, and is the owner of all rights, title and interest in and to U.S. Patent No. 5,301,105 (the "'105 Patent"). I was one of the co-founders of Allcare and have served as a Director since its inception, and at all times relevant to the events and transactions comprising this

litigation. I submit this Declaration in support of Allcare's Opposition to Highmark's Motion for Partial Summary Judgment of Patent Unenforceability.

3. Highmark alleges that (i) a 1989 one-page Bank One document, entitled "Medical Payments System," (the "Bank One Medical Payment System" and the "MPS document"), and (ii) information about a hospital information system used at Huguley Memorial Hospital in Fort Worth, Texas (called the "SSCI system," and referred to herein as "SSCI"), were intentionally withheld from the U.S. Patent and Trademark Office ("PTO"). Because of the importance of this issue, I have endeavored to locate all of the relevant information and materials that are in Allcare's possession concerning this matter. The purpose of this declaration is to summarize my findings in this regard.

4. The application leading to the '105 Patent was prosecuted by John L. Sigalos and Andrew M. Hassell. I have known Mr. Sigalos for more than twenty (20) years, dating back to well before his firm's engagement to prepare and prosecute the application that matured into the '105 patent, and have known Mr. Hassell for at least fourteen (14) years. I have carefully reviewed the deposition testimony of both Mr. Sigalos and Mr. Hassell concerning their recollection of the Bank One Medical Payment System and the MPS document, and note that neither man recalls having ever seen the MPS document at any time during the course of prosecuting such application. I have no reason to question the truthfulness of their testimony in this

regard, and to the contrary know both men to be of the highest personal integrity and honesty.

5. I am also personally acquainted with Dr. Desmond D. Cummings, Jr., the inventor of the '105 Patent, whom I have known for more than fourteen (14) years. I have carefully reviewed Dr. Cummings' deposition testimony concerning his familiarity with the Bank One Medical Payment System and the MPS document, in this and prior cases involving the '105 Patent. I note that Dr. Cummings has testified that he was under the impression that Mr. William C. Conner had discussed the Bank One Medical Payment System with Mr. Sigalos, and believes that Mr. Conner forwarded Mr. Sigalos a copy of the MPS document. I have no reason to question the truthfulness of Dr. Cummings' testimony in this regard, and to the contrary know him to be a deeply religious man of the highest personal integrity and honesty.

6. During the period between March 1990 and shortly prior to his death in January of 1992, Mr. Conner was principally responsible for interfacing between Dr. Cummings and the aforementioned patent attorneys. Mr. Conner's role in this regard was based on his interest in implementing Dr. Cummings' invention; his having concluded on June 27, 1990 an exclusive option to acquire all rights in and to the invention from Dr. Cummings; his obligation to compensate such attorneys for their work on the application; and his own well-deserved reputation and first-hand experience as a highly principled, top-notch entrepreneur.

7. As a result of my review of certain business records which are retained as part of the books and

records of Allcare in the ordinary course, records which have been produced in this case and in prior cases involving the '105 Patent, I have confirmed that upon reviewing the Bank One Medical Payment System brochure, Mr. Conner wrote a letter, a true and correct copy of which is attached hereto as Exhibit 1, on May 22, 1990 to Bank One, in which he communicated that he did not consider the system described therein to be anything more consequential than a component of Dr. Cummings' invention, insofar as he stated to Bank One that "your system may fit as a component of our 'All Care System.'"

8. In addition to my own personal recollection of conversations with him pertaining to this matter, about which I have previously testified under oath in this and/or earlier cases involving the '105 patent, there are other documents that caused me to believe that Mr. Conner did not view the Bank One Medical Payment System as consequential to the invention of the '105 patent. On or shortly after June 29, 1990, I received a copy of a "Self Memo to File" that Bill Conner dictated and after transcription, circulated to Des Cummings, myself and a number of other persons. The memorandum in question is attached as pages 30 and 31 of the Highmark Summary Judgment Appendix, filed December 23, 2004. I understand that Highmark has asserted that in this

* * *

IN THE UNITED STATES DISTRICT COURT
FOR THE NORTHERN DISTRICT OF TEXAS
FORT WORTH DIVISION
CIVIL NO. 4:03 CV-1384-Y

HIGHMARK, INC.

Plaintiff,

v.

ALLCARE HEALTH
MANAGEMENT SYSTEMS, INC.

Defendant.

Judge: Terry R. Means

DECLARATION OF THOMAS G. PLASKETT

1. My name is Thomas G. Plaskett. I am over 21 years old, have not been convicted of a felony, and am fully competent to make this declaration. I have personal knowledge of the matters set forth herein and know them to be true and correct.

2. I am Chairman of the Board of Directors for Allcare Health Management System, Inc. ("Allcare"), the Defendant in the above-styled and numbered action. Allcare is a Virginia corporation based in Fort Worth, Texas, and is the owner of all rights, title and interest in and to U.S. Patent No. 5,301,105 (the "'105 Patent"). I was recruited to consider accepting this position by William C. Conner ("Mr. Conner") beginning in 1991, during the period that the application leading to the issuance of the '105

patent was pending, but did not accept the position until several years following Mr. Conner's death when in 1994, Mr. Conner's son, W. Halden Conner, again requested that I consider such role following the issuance of the '105 Patent. I submit this Declaration in response to the motion for partial summary judgment filed by Highmark based on the alleged unenforceability of the '105 Patent.

3. In addition to serving as Chairman of Allcare, I presently serve as a director on several corporate boards, including such publicly traded companies as RadioShack Corporation (NYSE), Smart & Final, Inc. (NYSE) and Novell Corporation (NASDQ), as well as several privately held companies. I was formerly the Chairman of Pan Am Corporation, parent of Pan American World Airways, from 1988 to 1991, and Senior Vice President of Marketing and Senior Vice President of Finance of both parent AMR Corporation and American Airlines, Inc. from 1974 to 1986.

4. In the above captioned action, it is my understanding that Highmark alleges among other things that a 1989 one-page Bank One document, entitled "Medical Payments System," (the "Bank One Medical Payment System" and the "MPS Document"), was intentionally withheld from the PTO. Defendants ask the court to infer that Dr. Cummings and Mr. Conner "intentionally failed to disclose the MPS Document" to the PTO. As the Court considers its ruling on the parties' respective motions, I wish to provide the court with the benefit of some factual information concerning Mr. Conner and the reasons that I personally find it inconceivable that he, either alone or in collusion

with anyone else, would have ***intentionally*** withheld anything, much less have withheld something that he believed he had either a legal or an ethical obligation to disclose.

5. I personally became most knowledgeable about Mr. Conner shortly after being elected to the Tandy Corporation Board of Directors in 1986. (Tandy Corporation changed its name to RadioShack Corporation in 1999). Mr. Conner had served on the Tandy Board for many years. He

* * *

IN THE UNITED STATES DISTRICT COURT
FOR THE NORTHERN DISTRICT OF TEXAS
FORT WORTH DIVISION
CIVIL ACTION NO. 4:03-CV-1384-Y

HIGHMARK, INC.

Plaintiff,

v.

ALLCARE HEALTH
MANAGEMENT SYSTEMS, INC.

Defendant.

ORDER STRIKING CLAIM-CONSTRUCTION MOTION AND RELATED FILINGS, DIRECTING AN AMENDED CLAIM-CONSTRUCTION MOTION, AND RENDERING MOOT RELATED FILINGS AND MOTIONS

Pending before the Court is defendant Allcare Health Management Systems, Inc. ("Allcare")'s Motion for Claim Construction [doc. # 158], filed December 13, 2004. Also pending before the Court are the following related filings: (1) plaintiff Highmark, Inc. ("Highmark")'s Objections to Evidence Cited in Allcare's Motion for Claim Construction [doc. # 253], filed July 5, 2005; (2) Allcare's Motion to Strike and Objections to Highmark's Extrinsic Claim Construction Evidence [doc. # 265], filed July 28; and (3) Highmark's Motion for Leave to File Sur-Reply to Defendant Allcare's Motion for Claim Construction [doc. # 270], filed July 29.

On August 3 the Court issued an order directing the parties to file supplemental briefs as to whether Allcare's claim-construction motion should be stricken without prejudice to its refiling shortly thereafter to account for recent changes in the law and Allcare's amended requests regarding claim construction. The parties filed their supplemental briefs on August 10. Neither party opposes the striking of Allcare's claim-construction motion nor has indicated to the Court that any prejudice to either side will ensue from the striking or amendment of that motion. In fact, both parties indicate that such a course would benefit their case and this Court's review of the claim at issue.

Therefore, it is ORDERED that Allcare's Motion for Claim Construction [doc. # 158] is hereby STRICKEN. Also STRICKEN are Highmark's Opposition to Defendant's Motion for Claim Construction of U.S. Patent No. 5,301,105 [doc. # 252], and Allcare's Reply to Highmark's Response in Opposition to Defendant's Motion for Claim Construction of U.S. Patent No. 5,301,105 [doc. # 260].[1]

Further, Allcare is hereby DIRECTED to file no later than **September 6, 2005**, an amended claim-construction motion, in compliance with the Court's initial scheduling order, that sets forth all of Allcare's requested findings and further comments upon the recent decision *Phillips v. AWH Corp.*, ___ F.3d ___, Nos. 03-1269 & 03-1286, 2005 U.S. App.

---

[1] The Court notes that this order in no way impacts the parties' obligations to comply with the Court's July 27 notice regarding the appointment of a special master.

LEXIS 13954, 75 U.S.P.Q.2D (BNA) 1321 (Fed. Cir. 2005) (en banc).[2] Allcare is hereby granted LEAVE to exceed the page-limitation requirement set out in local rule 7.2(c), and may file a brief in support of its amended claim-construction motion that consists of **fifty (50) pages** or less. Response and reply briefs may be filed in accordance with local rules 7.1(e) and (f).[3]

Further, having stricken Allcare's claim-construction motion, the Court concludes that Highmark's Objections to Evidence Cited in Allcare's Motion for Claim Construction [doc. # 253], Allcare's Motion to Strike and Objections to Highmark's Extrinsic Claim Construction Evidence [doc. # 265], and Highmark's Motion for Leave to File Sur-Reply to Defendant Allcare's Motion for Claim Construction [doc. # 270] should be and are hereby RENDERED MOOT.

SIGNED August 12, 2005.

/s/ Terry R. Means

---

[2] **The amended claim-construction motion, any responses thereto, and any other related filings must be fully self-contained,** meaning they may not refer to, rely upon, or incorporate evidence or arguments previously offered to the Court in any other motion or filing.

[3] The Court further grants LEAVE to Highmark and Allcare in filing their response and reply briefs to exceed the page-limitation requirements of local rule 7.2(c). Highmark's response may consist of **fifty (50) pages** or less while Allcare's reply may consist of **twenty (20) pages** or less.

TERRY R. MEANS
UNITED STATES DISTRICT
JUDGE

IN THE UNITED STATES DISTRICT COURT
FOR THE NORTHERN DISTRICT OF TEXAS
FORT WORTH DIVISION
CIVIL ACTION NO. 4:03-CV-1384-Y

HIGHMARK, INC.

Plaintiff,

v.

ALLCARE HEALTH
MANAGEMENT SYSTEMS, INC.

Defendant.

NOTICE REGARDING THE APPOINTMENT OF A SPECIAL MASTER

On July 27, 2005, the Court issued a notice regarding the appointment of a special master [doc. # 263] informing the parties of its conclusion that the appointment of a special master to review claim-construction issues in this case could effectively and timely aid the Court in reviewing that issue. The Court directed the parties to respond to that notice and inform the Court as to whether they consented to such appointment. In their responses [docs. # 277, 278], plaintiff Highmark, Inc., did not oppose the appointment of a special master while defendant Allcare Health Management Systems, Inc. ("Allcare"), did. On May 17, 2006, having carefully reviewed the parties' filings on the issue, the Court concluded that the appointment of a special master was likely unnecessary and issued a notice [doc. # 341] stating as much. The May 16 notice also stated,

however, that should the Court's conclusion regarding the necessity of appointing a special master change upon greater reflection, the process for appointing a special master would proceed accordingly.

Following the May 16 notice the Court devoted the great portion of its time to reviewing the parties' filings on claim construction. In fact, during the two months since the May 16 notice the Court's briefing attorney for its even docket has exclusively devoted her time to the claim-construction issues in this cause. Having expended such effort, the Court is still unable to issue a ruling on claim construction as the matter involves issues of such complexity that the Court cannot ably devote itself to that matter as well as manage its civil and criminal dockets.

In light of the Court's difficulty in ruling on the claim construction issues in this cause, the Court finds that the pretrial matter of claim construction in this case is an exceptional one that cannot be addressed effectively and timely by the Court. *See* FED. R. CIV. P. 53(a)(1)(C) (West 2006). Consequently, a special master will be appointed to handle that issue pursuant to Federal Rule of Civil Procedure 53. *See* FED. R. CIV. P. 53(a)(1)(C) (West 2006).[1] In making this determination the Court has

---

[1] The Court has the power to appoint a special master without the consent of both of the parties. *See* FED. R. CIV. P. 53(a)(West 2006); *Constant v. Advanced Micro-Devices, Inc.*, 848 F.2d 1560, 1566 (Fed. Cir. 1988) (citation omitted). And, special masters can properly aid the court in evaluating patent issues. *See Constant*, 848 F.2d at 1566 (citation omitted); *Invitrogen Corp. v. Clontech Labs., Inc.*, 429 F.3d 1052 (Fed. Cir. 2005);

considered the fairness of imposing the likely expenses on the parties. *See* FED. R. CIV. P. 53(a)(3) (West 2006).

The Court will grant the parties an opportunity to agree on a master or to submit nominations. The individual agreed upon, or any person nominated, should be an impartial attorney with experience in patent law, computer system infrastructure, engineering, programming, and/or processing, and knowledge of the legal issues presented in the matters in issue; or may be someone who does not meet this precise description but is otherwise qualified to perform the functions intended by the Court. In formulating their lists of potential nominees the parties may contact the individuals examined to secure resumes and availability and to discuss fees and payment options; the parties may not engage in substantive discussion with such individuals, however. The Court reserves its power to appoint a master not agreed upon or nominated by the parties.

The parties are therefore DIRECTED to file no later than **August 4, 2006**, a **joint** notice in which they: (1) state their agreement upon or nominations for a master, as outlined above; (2) provide the credentials and/or resume for any individual agreed upon or nominated; (3) propose the contents of the order of appointment, *see* FED. R. CIV. P. 53(b)(2); (4) state whether *ex parte communications* should be permissible between the master and the Court

---

LizardTech, Inc. v. Earth Res. Mapping, Inc., 424 F.3d 1336 (Fed. Cir. 2005); *Harris Corp. v. Ericsson Inc.*, 417 F.3d 1241 (Fed. Cir. 2005).

and/or whether such *ex parte* communications should only be permissible upon the Court's final entry of an order regarding claim construction, *see* FED. R. CIV. P. 53(b)(1)(B)); (5) indicate whether the parties would prefer the master to enter an order or report and recommendations, both of which would be subject to either party's objections, *see* FED. R. CIV. P. 53(g); (6) propose the manner in which the master shall be compensated and whether such compensation should be provisional pending a final order or judgment of the Court, *see* FED. R. CIV. P. 53(h); and (7) raise any other matter or issue not specially addressed by this order but that the parties believe is important or should be incorporated into the Court's order of appointment.

SIGNED July 19, 2006.

/s/ Terry R. Means

TERRY R. MEANS
UNITED STATES DISTRICT JUDGE

IN THE UNITED STATES DISTRICT COURT
FOR THE NORTHERN DISTRICT OF TEXAS
FORT WORTH DIVISION
CIVIL NO. 4:03 CV-1384-Y

HIGHMARK, INC.

Plaintiff,

v.

ALLCARE HEALTH
MANAGEMENT SYSTEMS, INC.

Defendant.

Judge Terry R. Means

SPECIAL MASTER'S REPORT AND RECOMMENDED DECISIONS ON CLAIM CONSTRUCTION

I. INTRODUCTION

Plaintiff Highmark, Inc. ("Highmark") filed this action against Allcare Health Management Systems, Inc. ("Allcare") seeking declaratory judgment of invalidity and non-infringement of U.S. Patent No. 5,301,105 ("the '105 patent"). Allcare filed a counterclaim alleging infringement of the '105 patent.

Allcare filed an Amended Motion for Claim Construction. That amended motion was referred to me, Don W. Martens, as Special Master for

construction of disputed terms of Claims 1, 52, 53, and 102 of the '105 patent.

The claim construction issues were fully briefed by the parties. A *Markman* hearing was held on November 8, 2006. At the hearing, oral argument was presented by counsel for both parties.

The meaning of numerous claim terms has been raised in the Joint Claims Construction Statement ("JCC") (A462-515, Doc. #133)[1], the briefs of the parties and Highmark's Proposed Order Regarding Claim Construction (H626-634). Following the oral hearing, at my request, the parties each submitted a post-hearing statement identifying those claim terms that still need to be construed. Allcare's Post Hearing Statement ("APH"); and Highmark's Post Hearing Statement ("HPH").[2]

I have reviewed and considered all of the arguments, evidence and submissions of the parties and provide the following report and recommended decisions.

II. BACKGROUND

A. The '105 Patent

The '105 patent was issued to Desmond D. Cummings on April 5, 1994. The invention relates to a managed health care system that uses a computer

---

[1] The Joint Claims Construction Statement will be cited as "JCC___" Allcare's Appendix in support of its motion will be cited as "A__" and Highmark's Appendix in support of its opposition as "H_".

[2] Copies of APH and HPH are attached to the Record of Materials and Evidence considered by Special master, filed herewith.

system to interconnect and integrate interaction of the patient, health care provider, bank or other financial institution, insurance company, utilization reviewer, and employer so as to include within a single system each of the essential participants to provide patients with complete and comprehensive pretreatment, treatment and post-treatment health care and payment for such health care. '105 patent, cover page, Abstract.[3]

Referring to Fig. 1 of the patent, a computer central processor 10 is the heart of the operational system. The central processor is connected to memory banks 16, 17, 18, 19, 20, 21 and 44 which store various information and data. '105 patent, 4:30-39. These memory banks may be a part of the processing system 10 or may be separate data banks that are accessible to the processing system. The central processor is connected to a plurality of remote physician office terminals, 11a-11c, each located in the office of a respective physician or other health care provider. The central processor also is connected to other participants in the system such as banks 27 and insurance companies 24a-24c. *Id.* 5:49-6:2.

The central processor memory banks include information identifying each potential patient having the required insurance, or otherwise being authorized to use the system. *Id.* 8:3-14. When a patient visits a physician or other health care provider, the patient's identification is entered into

---

[3] Citations to the patent are to the cover page, or to column and line of the specification, or to Fig. of drawing.

the system through that physician's remote physician office terminal 11 a and is communicated to the central processing system for verification of the patient's authorization to participate in the health care system. *Id.* 8:9-14; 8:57-9:12; boxes 100-102, Fig. 5. The central processor accesses appropriate insurance information such as a list of treatments and authorized costs from an insurance file memory bank 18. *Id.* 9:26-33, box 104, Fig. 5; 4:53-62.

The physician may use an optional diagnostic smart system to assist in making a diagnosis. To do so, the physician enters, through the physician's office terminal, patient symptoms and other data which will assist in making a diagnosis and identifying recommended treatment. *Id.* 9:53-60, box 111, Fig. 5. The central physician's file 44 has stored in its memory identification of the most commonly encountered diseases and other ailments, together with the symptoms usually associated with them. *Id.* 6:55-59. When the physician enters the observed symptoms and requests a diagnosis, the central processing system obtains the necessary data from the physician's file 44 and prepares a list of the most likely medical conditions corresponding to the observed symptoms, together with the generally approved or recommended treatment protocols. *Id.* 6:59-67, box 112, Fig. 5. Thus, the physician is assisted by the processing system in identifying the most likely causes of the health problem. The physician then completes his or her diagnosis, and determines a proposed treatment. *Id.* 9:60-65.

Having made the diagnosis, with or without the assistance of the diagnostic smart system, the

physician then enters into the system data identifying the proposed treatment. *Id.* 11:32-36, box 127, Fig. 6. The system memory banks include information identifying treatments and procedures for which utilization review is required. *Id.* 4:53-62. The processing system compares the proposed treatment with recommended protocols stored in the insurance file 18 and physician file 44 and indicates whether the proposed treatment meets applicable criteria of the insurer. *Id.* 10:3-8; 11:37-40, box 128, Fig. 6. If the treatment requires utilization review or does not meet the applicable criteria, there ensues a discussion with a nurse and sometimes with the Medical Director. *Id.* 11:44-55. If the treatment is approved ("Yes" between box 128 or 132, Fig. 6), the physician proceeds with treatment. After treatment the physician enters into the system that the visit is completed. *Id.* 13:24-30, box 159.

The system then makes provision for transfer of approved sums from the bank to the health care provider. *Id.* 13:44-52.

Fig. 3 illustrates an alternative embodiment which functions similarly to that of Fig. 1 discussed above, but differs in that the physician file 44, and some other data files, may be located in the separate physician offices in a personal computer ("PC"), instead of at the central location with the central processor; and some of the data processing is done at the separate physician's offices in a microprocessor 60 which communicates with the central processor through a conventional modem 62. *Id.* 7:39-60.

B. Prosecution History of '105 Patent

The application for the '105 patent was filed in the U.S. Patent and Trademark Office ("PTO") on April

8, 1991. The original application included 102 claims. A68-95.

A Disclosure Statement was filed on July 29, 1991 making of record five prior issued patents and one prior publication. A109-112.

In an Office Action dated January 8, 1993, all claims were rejected by the Supervising Patent Examiner at the PTO assigned to the application. A113-119. All claims were rejected on formal grounds as indefinite and vague under 35 U.S.C. § 112. No rejection based on prior art was made, and the Examiner stated that all claims would be allowable if re-written or amended to overcome the rejection under Section 112. A117.

On June 8, 1993, the applicant filed a response to the Office Action and amended all of the claims, including the claims which issued as Claims 1, 52, 53, and 102, to overcome the rejection as indefinite and vague. A249-269.

On September 9, 1993, the Examiner and counsel for the applicant had a telephone interview, resulting in an Amendment filed on September 14, 1993. A271-276 (Amendment), A277 (Interview Summary Record). Minor spelling and grammatical corrections were made to Claims 52 and 102. No amendment was made to Claims 1 or 53 (Application Claim 54).

All 102 claims were then allowed (A278-79) and the patent issued on April 5, 1994.

C. General Principles of Claim Construction

Claim construction is an issue of law. *Cybor Corp. v. FAS Techs., Inc.*, 138 F.3d 1448, 1456 (Fed. Cir. 1998) (en banc); *Markman v. Westview Instruments, Inc.*, 52 F.3d 967, 979 (Fed. Cir. 1995) (en banc),

aff'd, 517 U.S. 370, 116 S.Ct. 1384, 134 L.Ed.2d 577 (1996).

The Court must look to the language of the claims to determine what "the applicant regards as his invention." 35 U.S.C. § 112, ¶ 2; *Phillips v. AWH Corp.*, 415 F.3d 1303 (Fed. Cir. 2005) (*en banc*). Claim construction begins with the language of the claims. *Vitronics Corp. v. Conceptronic, Inc.* 90 F.3d 1576, 1582 (Fed. Cir. 1996); *NTP, Inc. v. Research in Motem, Ltd.*, 418 F.3d 1282, 1299 (Fed. Cir. 2005). "The construction of claims is simply a way of elaborating the normally terse claim language in order to understand and explain, but not to change, the scope of the claims." *Ferlep v. Brinkman Corp.*, 418 F.3d 1379, 1382 (Fed. Cir. 2005). The Court in *Phillips* noted that: "It is a 'bedrock principle' of patent law that `the claims' of a patent define the invention to which the patentee is entitled the right to exclude." *Id.* [4]

The specification describes the invention set forth in the claims. 35 U.S.C. § 112, ¶ 1; *Phillips*, 415 F.3d at 1312. In *Phillips*, the Federal Circuit, *en banc*, thoroughly treated the issue of "the extent to which we should resort to and rely on a patent's specification in seeking to ascertain the proper scope of its claims." *Phillips*, 415 F.3d at 1312.

A claim term is generally given the ordinary and customary meaning that the term would have to a person of ordinary skill in the art at the time the patent application was filed. *Phillips*, 415 F.3d. at 1312-13. The person of ordinary skill in the art is

---

[4] For conciseness, throughout this section, in quotes from *Phillips*, I will delete the citations by the *Phillips* Court.

deemed to read the claim term not only in the context of the claim itself, but in the context of the entire patent, including the specification, and with an understanding of its meaning in the art and of any special meaning and usage in the field. *Id.* at 1313.

In some cases, the ordinary meaning as understood by one skilled in the art may be readily apparent to a lay judge, and claim construction then is little more than application of the widely accepted meaning of commonly understood words. In such cases, general purpose dictionaries may be helpful. *Id.* at 1314. In many cases, however, claim terms have a particular meaning in the art. The Court then must look to

> "those sources available to the public that show what a person of skill in the art would have understood disputed claim language to mean."
>
> "Those sources include the words of the claims themselves, the remainder of the specification, the prosecution history, and extrinsic evidence concerning relevant scientific principles, the meaning of technical terms, and the state of the art." *Id.*

The specification "is always highly relevant to the claim construction analysis. Usually, it is dispositive; it is the single best guide to the meaning of a disputed term." *Id.* at 1315. "The construction that stays true to the claim language and most naturally aligns with the patent's description of the invention will be, in the end, the correct construction." *Id.* at 1316.

Sometimes the inventor acts as his own lexicographer and specially defines a claim term in

the specification. In that instance, the inventor's definition controls. *Id.* Sometimes the inventor may expressly limit claim scope in the specification. Again, the inventor's apparent intent controls. *Id.*

The prosecution history of the patent consists of the record of the proceedings before the PTO, including the prior art cited during the examination. It is part of the "intrinsic evidence" and should be considered. *Id.* at 1317. It can demonstrate how the inventor understood the invention and whether the inventor limited the invention in the course of the prosecution. *Id.* However, the prosecution history often lacks the clarity of the specification and thus is less useful than the specification. *Id.*

Extrinsic evidence consisting of all evidence external to the patent and prosecution history, including expert and inventor testimony, dictionaries and learned treatises can also be helpful. *Id.* However, extrinsic evidence is less reliable than the intrinsic evidence, consisting of the patent itself and the prosecution history. *Id.* at 1318.

Expert testimony can be useful to provide background on the technology, to explain how the invention works, or to establish that a particular claim term has a particular meaning in the art. "However, conclusory, unsupported assertions by experts as to the definition of a claim term are not useful to a Court." *Id.* The Court also should discount any testimony that is at odds with the intrinsic evidence. *Id.*

Dictionaries, especially technical dictionaries, and treatises can also be useful in claim construction. *Id.* As the Court said in *Phillips*:

> "(J)udges are free to consult dictionaries and technical treatises at any time in order to better understand the underlying technology and may even rely on dictionary definitions when construing claim terms, so long as the dictionary definition does not contradict any definition found in (the intrinsic evidence)." 415 F.3d. at 1322-23.

However, dictionaries focus on the abstract meaning of words, whereas the focus in claim construction is on the meaning to one of ordinary skill in the art after reading the entire patent. *Id.* at 1321. It is improper to read a claim term more broadly than its ordinary and customary meaning revealed by the context of the intrinsic record, simply because the broader meaning can be found in a dictionary. *Nystrom v. Trex Co.*, 424 F.3d 1136, 1145 (Fed. Cir. 2005).

While the claims must be construed in the context of the specification, it is improper to read a limitation from the specification into the claim. *CollegeNet, Inc. v. ApplyYourself Inc.*, 418 F.3d 1225, 1231 (Fed. Cir. 2005). "If we once begin to include elements not mentioned in the claim in order to limit such claim . . . we should never know where to stop." *NTP*, F.3d at 1310.

It is improper to limit a claim to the specific embodiments disclosed in the specification. Even if the patent discloses only a single embodiment, the claims must not be construed as limited to that embodiment. *Phillips*, 415 F.3d at 1323.[5]

---

[5] An exception to this rule applies to claims drafted in a form which subjects them to construction under the

The line between using the specification to interpret the meaning of a claim and importing limitations from the specification into the claim can be very difficult to apply in practice. *Id.* at 1323. However, the focus must be on how a person of ordinary skill in the art would understand the claim terms. *Id.*

In the final analysis, "there is no magic formula or catechism for conducting claim construction." *Id.* at 1324. The Court can consult the various relevant sources in any sequence it chooses, so long as the appropriate weight is attached to those sources and those sources are not used to contradict claim meaning that is unambiguous in light of the intrinsic evidence.

III. THE TRIGON CLAIM CONSTRUCTION RULINGS

In a prior action, Allcare alleged infringement of the '105 patent by Trigon Healthcare, Inc. *Allcare Health Management System, Inc. v. Trigon Healthcare, Inc.*, C.A. No. 02-756-A (E.D. Va.). On February 3, 2003, Chief Judge Claude M. Hilton signed an Order and Memorandum Opinion in that action construing certain terms found in the claims of the '105 patent ("the *Trigon* rulings"). A430-454.

In this case, Highmark moved to strike all references made by Allcare to the *Trigon* rulings in support of Allcare's proposed claim construction. This Court denied the motion to strike. (Doc. # 245, June 15, 2005, A455-461). This Court held that, in reviewing motions and issues presented before it, the

---

provisions of 35 U.S.C. § 112, ¶ 6, as will be discussed below.

Court may look to previous rulings within, or outside, the Fifth Circuit. "(I)n fact the very essence of our judicial system requires such a process." *Id.* at 457. The Court ruled that the *Trigon* rulings should not be given precedential weight, but they should be evaluated for persuasive effect. The Court and the Special Master are free to agree or disagree, wholly or in part, with the *Trigon* rulings. *Id.* at A460-61, fn. 7.

Highmark here argues that the *Trigon* rulings are incorrect under the law applicable to claim construction as set forth by the Federal Circuit in *Phillips*. *Phillips* was decided after the *Trigon* rulings, and after this Court's Order regarding the *Trigon* rulings. Highmark contends that, in view of *Phillips*, the Special Master and this Court should not consider the *Trigon* rulings at all in construing the claims of the '105 patent.

Allcare does not contend that this Court is barred by *res judicata* or collateral estoppel from coming to a different decision from the *Trigon* Court. Allcare recognizes that this Court is free to make a decision *de novo*, but contends that the *Trigon* rulings must be considered for their persuasive effect. *Markman* hearing transcript ("Hrg. Trans.") at 16-17.

This Court's Order of June 15, 2005 correctly decided that the *Trigon* rulings should be evaluated for persuasive effect, and *Phillips* does not change that. My recommended claim construction will be based on a *de novo* review, but the *Phillips* decision, and other subsequent decisions cited by Highmark, will be part of the evaluation of the persuasive effect, if any, to be given to the *Trigon* rulings on each claim limitation individually.

Where the construction in the *Trigon* Rulings was based on a stipulation of the parties to that case rather than an independent review by Judge Hilton, I will not discuss the *Trigon* ruling and will not give it any weight.

IV. PERSON OF ORDINARY SKILL IN THE ART

"The inquiry into how a person of ordinary skill in the art understands a claim term provides an objective baseline from which to begin claim interpretation." *Phillips*, 415 F.3d at 1313. Generally, the "art" is determined from the field of technology of the invention. *See Multiform Desiccants, Inc. v. Medzam Ltd.*, 133 F.3d 1473, 1477 (Fed. Cir. 1998).

The '105 patent relates to "managed health care systems" ('105 patent, 1:4) that utilize a computer processing system to interconnect and integrate interaction of the patient, health care provider and various other participants all within a single system. Thus, the '105 patent relates to the application of computer processing to managed health care systems.

A person of ordinary skill in the art is a hypothetical person. The inventor may or may not be one of ordinary skill in the art. *See, Kimberly Clark Corp. v. Johnson & Johnson*, 745 F.2d 1437, 1454 (Fed. Cir. 1984). However, Highmark contends that, in this case, someone with the background of the inventor, Desmond Cummings, Jr., Ph.D., at the time of the invention is the appropriate standard for a hypothetical person of ordinary skill in the art of the '105 patent. Dr. Cummings had no degree in computer science or health care. He was not a medical doctor. His Ph.D. is in theology. At the time

of the application for the '105 patent was filed, he had been a marketing and planning executive in the health care management field for about seven years and had been Chief Executive Officer of a medical center for several years. His responsibilities did not include development of information systems. A659-677. He had six to eight credit hours in studying computer programming language, and in the process of those studies, he produced some computer flow charts. He also wrote some computer programs and was involved with others in the design of a flow chart for one computer program. H422-26.

Highmark has not specifically defined the level of skill of one of ordinary skill in the art, but from its summary of Dr. Cumming's skill, apparently Highmark contends that one of ordinary skill in the art of the '105 patent need have no educational degree in either computer science or health care, but would have several years experience in health care management and some limited experience in designing flow charts for computer systems. Highmark contends that no extensive skill in either computers or health care is necessary to understand the patent.

Allcare contends that a person of ordinary skill in the art of the '105 patent is an individual who works in the field of developing and/or improving managed health care systems, has at least one year of experience in managed health care, and a B.S. in computer science or its equivalent. Allcare offers no direct evidence to support those specific requirements but relies on the need for one of ordinary skill to understand managed health care concepts such as "utilization review" and "pre-

certification" and computer system concepts such as "smart systems," "conventional communication paths," "conventional data input terminals," and the current state of the art of personal computers. Hrg. Trans. at 37-38.

In view of the limited record on this issue, I recommend that, for purposes of these claim construction rulings, a person of ordinary skill in the art would have sufficient knowledge of managed health care systems to understand how the various participants interact with each other, and sufficient knowledge of computer systems to enable design of flow charts for the interconnection and interaction of the various computer system components, the various participants in the managed health care system, and the functions each component or participant will perform.

V. GENERAL COMMENTS

Many terms for which construction is sought by the parties are non-technical terms used everyday by non-technically trained judges and jurors. For many of these terms, there is nothing in the intrinsic record indicating they are used in the patent with other than their common and ordinary meaning to the ordinary person with no skill in the art. I have construed those claim terms. However, in preparing jury instructions, the parties and the Court should consider whether construing them for jury will add confusion, rather than reducing it.

Throughout this report, multiple individual terms or phrases which form part of a claimed element are construed. Complex sentence structure and confusion sometimes result from literally combining the definitions together into a comprehensive

construction for the entire element, just as joining together dictionary definitions for a number of words in a sentence would be cumbersome. Thus, I recommend that the jury be given a glossary of claim terms and definitions, and that definitions be substituted into the claim element itself only where that can be done in a comprehensible manner. See my recommended construction of "data symbolic of patient symptoms for tentatively identifying a proposed mode of treatment" in 52(c) as an example where some definitions were included in the body of the construction, and others were added at the end as a specific glossary for that claim term. Alternatively, the glossary could be separate. I suggest these are matters to be worked out in preparing jury instructions.

My intent here is to construe all of the claim terms indicated by the parties to still be in dispute in their respective Post Hearing Statements. Sometimes I have separately construed all of the parts of a disputed phrase, without combining the resulting definitions, other times I have construed the entire phrase without separately construing its parts. Hopefully, I have provided adequate construction for the Court to instruct the jury. I will do it differently if the Court requests.

In my construction of individual elements, I cite to stipulations that I consider relevant to my construction analysis. Not citing other stipulations is not intended to indicate that uncited stipulations should be disregarded by the Court. I simply did not review or cite them because I did not consider them necessary to my analysis of disputed claims.

VI. CLAIM 1

A. Preamble:

"A comprehensive health care management system comprising;"

A preamble often is only environmental, and is not a limitation of the claim. However, if limitations in the body of the claim derive antecedent basis from the preamble, or the preamble is necessary to give life, meaning and vitality to the claim, then the preamble limits the claim. *NTP, Inc. v. Research in Motion, Ltd.*, 418 F.3d 1282, 1307 (Fed. Cir. 2005).

Stipulations

The *Trigon* rulings found the preamble not to be a limitation of the claim, and so did not construe it. A433.

The parties here have stipulated that:

i) the preamble is a limitation of Claim 1 because it provides the antecedent basis for the phrase "in said system" of claim element 1(d); JCC1/A462,

ii) "health care" means "maintaining and restoration of health by the treatment and prevention of disease, especially by trained and licensed professionals (as in medicine, dentistry, clinical psychology and public health); *id.*, and

iii) "comprising" means "including" and is an open-ended transitional phrase according to well-established patent doctrine. JCC2/A463.

Allcare proposes the following meaning for "comprehensive health care management system":

"The integrated interconnection and interaction of the patient, health care provider, bank or other financial institution, insurance company, utilization reviewer/case manager and employer so as to include within a single system each of the essential participants to provide patients with complete and comprehensive maintaining and restoration of health by the treatment and prevention of disease, especially by trained and licensed professionals and payment therefor." APH3.

Highmark would add to Allcare's proposed construction the introductory clause "a comprehensive health care management system . . . including." It is not generally a preferred practice to define a term by quoting it and adding additional elements. Moreover, in claim construction, it gives the appearance of adding limitations from the specification rather than defining the claim term. Thus, the introductory clause proposed by Highmark is redundant or improper.

Highmark would also add the phrase "large in scope" as a construction of "comprehensive." The definition proposed by Allcare, and by Highmark, includes recitation of the various elements that make the health care management system comprehensive. The patent specification at 1:54-60 specifies various elements of the health care management system, "so as to include within a single system each of the essential elements to provide patients with complete and comprehensive health care." Those essential elements are recited in each parties' definition. Thus, the "large in scope" language Highmark proposes to add is redundant.

Highmark would substitute "elements" for "participants." The former term is used in the description at 1:59 and the latter in the Abstract on the cover page of the '105 patent. Either seems suitable and both are consistent with the specification. I recommend "elements" as a broader description.

The Abstract of the patent states that the system is both "integrated and comprehensive." '105 patent, cover page. Claim 1 recites in the preamble that the system is "comprehensive." Claim 102, on the other hand, recites that the system is "integrated." Thus, the comprehensiveness should be emphasized in the construction of the preamble of Claim 1, whereas the integration should be emphasized in constructing of the preamble of Claim 102.

Both parties submitted definitions of "comprehensive health care management system" that define the' system as both integrated and comprehensive. ("The integrated interconnection . . . to provide patients with . . . comprehensive maintaining and restoration of health . . . .")

The specification uses the terms "integrated" and "comprehensive" in a somewhat overlapping manner, but it appears that "comprehensive" is used generally to indicate that the system has many participants and functions, while "integrated" is used generally to indicate that those participants and the processing components interact to work as a unit.

Therefore, it is recommended that the preamble of Claim 1 is a limitation of the claim, and that it be construed as:

"A system combining the patient, health care provider, bank or other financial institution,

insurance company, utilization reviewer/case manager and employer so as to include within a single system each of the essential elements to provide patients with complete and comprehensive maintaining and restoration of health by the treatment and prevention of disease, especially by trained and licensed professionals and payment therefor, including:"

B. Claim Element 1(a):

"input means for entering data identifying each of a predetermined plurality of persons"

Stipulations

The parties have stipulated that:

i) Element 1(a) is a "means —plus— function" element, and is to be construed under the provisions of 35 U.S.C. § 112, ¶ 6 ("§ 112-6"); JCC3/A464,[6]

ii) "input means" is a physician office terminal; however, the parties disagree as to the proper scope and meaning of such physician office terminals; JCC3/A464,

iii) at least one of the functions of such "input means" is to "enter factual information into the comprehensive health care management system of the preamble for individuals who are members of a pre-established group"; *Id.*

---

[6] Neither party contends that the claim term "input means" is sufficient to describe to one of ordinary skill in the art a structure for performing the claimed means. Such a description of structure would remove the claim element from § 112-6. *Greenberg v. Ethicon Endo-Surgery, Inc.*, 91 F.3d 1580, 1583 (Fed. Cir. 1996).

iv) "*data identifying . . . persons*" is "factual information, such as an identification number, establishing or representing the identity of each of a predetermined plurality of persons"; *Id.*

v) "*data*" is "an item or items of information"; *Id.*

vi) the standard dictionary definition of "*identify*" is "to recognize as being; establish the identity of someone or something"; *Id.*

vii) the dictionary definition of the word "*each*" is "being one of two or more considered individually; every"; JCC4/A465

viii) The phrase "*a predetermined plurality of* persons" means "a group of two or more persons determined in advance"; *Id.*

Principles of Construction of Means-Plus-Function Claim Elements

35 U.S.C. § 112, ¶ 6 ("§ 112-6") provides:

> "An element in a claim for a combination may be expressed as a means or step for performing a specified function without the recital of structure, material, or acts in support thereof, and ***such claim shall be construed to cover the corresponding structure***, material, or acts ***described in the specification*** and equivalents thereof." (Emphasis added)

In construing means-plus-function claim limitations, under § 112-6, a Court must first identify and construe the particular function claimed, and then must identify the "corresponding structure" described in the specification. 35 U.S.C.

§ 112, ¶ 6; *Budde v. Harley-Davidson, Inc.*, 250 F.3d 1369, 1376 (Fed. Cir. 2000).

Construction of the function employs the same claim construction rules as for claim terms not governed by § 112-6. *Cardiac Pacemakers, Inc. v. St. Jude Medical Inc.*, 296 F.3d 1106, 1113 (Fed. Cir. 2002). However, identification of the "corresponding structure" is unique to claim elements governed by § 112-6.

If the applicant chooses to draft a claim in the means-plus-function format permitted by § 112-6, the claim element does not cover all means for performing the claimed function. It is limited in scope to the means disclosed and equivalents thereof. 35 U.S.C. § 112, ¶ 6. Section 112-6 operates to cut back on the type of means which can literally satisfy the claim language. *Jonsson v. The Stanley Works*, 903 F.2d 812, 819 (Fed. Cir. 1990).

A Court's determination of the structure that corresponds to a particular means-plus-function limitation is a matter of claim construction. *Atmel Corp. v. Information Storage Devices, Inc.*, 198 F.3d 1374, 1379 (Fed. Cir. 1999). It is not until the structure corresponding to the claimed function is identified that the scope of coverage of the limitation can be measured. *Budde*, 250 F.3d at 1376.

Function

As element 1(a) is governed by § 112-6, the first step in construction is to construe the function claimed to be performed by the "input means." The function recited in 1(a) is "entering data identifying each of a predetermined plurality of persons."

"Each"

The parties disagree as to the meaning of "each" in the phrase "the identity of each of a predetermined plurality of persons." The predetermined plurality of persons is stipulated to be a group of two or more persons determined in advance. It could be, e.g., persons on the payroll of an organization (see Claim 82), persons subject to worker's compensation (see Claim 84), all of the persons eligible to use the system, or some other group determined in advance. None of the claims here are limited to any particular identified group.

Highmark proposes that "each" means "every one" (Highmark brief 26) or "every one of two or more, considered individually." (HPH4). Allcare proposes that "each" means "being one of two or more considered individually." (APH1). In summary, Highmark contends that "each" means "every one" in the predetermined group while Allcare contends that "each" means "one" person in the predetermined group."

Looking first to the language of Claim 1 itself, and using the common and ordinary meaning of the words, the claim phrase "each of a predetermined plurality of persons," appears on its face to refer to every one of the predetermined plurality of persons, not just to one of them.

While element 1(a) recites entering data for "*each* of a predetermined plurality of persons," element 1(d) recites entering data for "*one* of said predetermined plurality of persons. "Differences among claims can also be a useful guide in understanding the meaning of particular claim terms." *Phillips*, 415 F.3d at 1314. The use of "each"

in 1(a) and "one" in 1(d) is evidence that the applicant distinguished between "each" and "one," and did not intend to use "each" to mean "one." The inventor, Desmond Cummings, confirmed that he considered "each" to mean "all." See Cummings dep. in *Allcare v. Cerner*, p. 56:6-18, H437.

The specification describes "the entry of information for *each* participant into the System." '105 patent, 8:3-4. The participants are authorized and identified "by designees such as authorized personnel within a company personnel department or an appropriate official within an insurance company." *Id.* 8:5-8. Once authorized, a participant is provided with an appropriate identification such as a magnetically encoded card, which is subsequently used by the system to verify that participant's authorization to participate and to identify his or her records. *Id.* 8:9-14; 8:57-67; 4:40-44.

When a participant uses the diagnostic and treatment portion of the system, the participant presents his or her identification card to the health care provider. *Id.* 8:55-9:1; Fig. 5, box 100. The physician's office terminal 11 (Fig. 2) is used to enter data identifying that participant.

It is apparent that information identifying all authorized members of the predetermined group must be pre-loaded in the system so that the system can perform the necessary identity check. Information must be entered for "each" member of the predetermined group, and the word "each" is used in the specification and element 1(a) to mean "every one." Every one of the members is entered as an individual, not merely by some generic collective

identification such as "employee." On the other hand, when a patient visits a physician's office with an illness only "one" participant's identity is entered, and the word "one" is used in element 1(d) to reflect that and distinguish it from "each."

Thus, the appropriate meaning of "each," in the context of the intrinsic record is "every one, individually," and it is recommended that the claim term "each" be so construed.

Highmark argues that the specification at 8:3-5 describes entry of participants through the physician office terminal which would be used to enter information only about those participants who visit that physician's office. Highmark contends that is not a "predetermined group" as claimed. Hrg. Trans. 74-82. Allcare agrees that the specification at 8:3-5 is describing entry of information through the physician's office terminal, and contends that requires a special definition of "each." Hrg. Trans. 231-37. Those contentions will be discussed in more detail in relation to Claim 102 below.

Element 1(a) specifies that the claimed entry of data is through the "input means," i.e., the physician's office terminal. But element 1(a) is a means-plus-function element. It is apparent that the physician's office terminal has "means for" entering information for every participant. If not all of those eligible participants ever actually visit that physician, the physician's office terminal still has "means for" entering their identification if they ever do visit. Thus, the recommended construction does read on the disclosed physician office terminals.

Structure

Having construed the function, the next step in a § 112-6 analysis is to identify the disclosed structure which is described as performing that function, i.e. the "input means." The parties have stipulated that the input means includes a "physician office terminal" but the parties disagree as to the scope and meaning of such physician's office terminals. JCC3 A464.

The specification describes "physician office terminals 11a-11c" which "may be any of a variety of conventional data input terminals." 4:10-14. The physician's office terminal illustrated in Fig. 2 is a so-called "dumb terminal." It uses a keyboard 55 or card reader 54 to input data to a remote central processor 10. It may display on a display window 51, data received from the remote processor, although that received data apparently may be displayed on a monitor 14. The processing capability of the "dumb terminal" is limited to that necessary for the keyboard, card reader, and display to function. It does not analyze the entered data or store or maintain it. Nobel dep. at 170:14-25, A691.

Allcare contends that the statement in the specification that the terminals 11 a-11 c "may be any of a variety of conventional data input terminals" (`105 patent, 4:10) would lead one of ordinary skill in the art to conclude that "terminal" included smart terminals that have their own resident microprocessing capabilities. However, when a patent specification discloses a specific structure corresponding to the means and also indicates only generally that other structures may be used, the "corresponding structure" described in the

specification is limited to the disclosed specific structure. *Fonar v. General Electric Co.* 107 F.3d 1543, 1551-52 (Fed. Cir. 1997); *Atmel Corp. v. Information Storage Devices, Inc.* 198 F.3d 1374, 1380-82 (Fed. Cir. 1999).

Allcare also relies on the Valentino patent No. 4,648,037 (A331-47) as teaching that a terminal can be a PC. In the disclosure statement filed in the prosecution history, Dr. Cummings described the Valentino patent as disclosing a terminal, which Allcare contends is a PC-like workstation. However, § 112-6 requires that the corresponding structure be described in the "specification." It is not sufficient to rely on structure incorporated by reference in the specification from another patent. *Default Proof Credit Card v. Home Depot U.S.A.*, 412 F.3d 1291, 1301 (Fed. Cir. 2005). For the same reason, it is insufficient to rely on structure from a patent cited in the prosecution history.

Moreover, Dr. Cummings' description of the Valentino patent as disclosing use of "a terminal," is insufficient to establish that the use of the phrase "any of a variety of conventional data input terminals" in the '105 specification would mean to one of ordinary skill in the art that the Valentino structure was being described. *See Atmel,* 198 F.3d at 1380.

"If one employs means-plus-function language in a claim one *must* set forth in the specification an adequate disclosure showing what is meant by the claim language." (Emphasis in original). *Id.* Neither the general reference to conventional terminals, nor the disclosure in *Valentino* is sufficient to describe a personal computer (PC) as

"corresponding structure . . . described in the specification." § 112-6.

Highmark contends that the "input means" structure disclosed must be a "dumb" terminal, without substantial processing capability, as distinct from a computer or PC. HPH4; JCCA464.

The specific embodiment disclosed may include structure in addition to that necessary to perform the claimed function. For purposes of § 112-6 the Court should identify only that structure necessary to perform the claimed function. *Micro Chemical,* 194 F.3d 1250, 1258 (Fed. Cir. 1999). It is improper to impose on the claimed § 112-6 structure, limitations unnecessary to perform the claimed function. *Acromed,* 254 F.3d 1371 (Fed. Cir. 2001).

For example, the terminal of Fig. 2 also includes a telephone 58. The telephone may be convenient but it is not necessary in performing the claimed function of "entering data identifying each of a predetermined plurality of persons" as the performance of that function is described in the specification. Thus, in a § 112-6 claim construction, it would be improper to specify the structure disclosed for performing the claimed function as including a telephone.

It seems equally improper to impose a negative limitation to the effect that structure not disclosed must be absent, unless the absence of that structure is necessary to performance of the claimed function. Here the *absence* of PC computing capability is not necessary in order to perform the claimed function. One of ordinary skill in the art would know that the disclosed keyboard, card reader, and display window are capable of performing the claimed "entering

data" function, whether they are part of a dumb terminal or part of a personal computer.

The disclosed terminal 11 inputs data to a remote central processor, where it is processed. Fig. 1 depicts the physician office terminals 11a-11c as linked directly to the central processing system 10 for processing of the input data. Fig. 3 shows the physician office terminal linked to a microprocessor 60, which may be located in the physician's office, and in turn is linked to the central processing system 61 and additional computers 61a. Thus, in the Fig. 3 embodiment, some of the processing may be done in a local microprocessor 60. It is apparent from the specification that the "input means" stipulated to be the "physician's office terminal" must have structure, such as a keyboard or card reader, that permits data entry, and must be connected, directly or indirectly, to a remote central processor which performs some (Fig. 3) or all (Fig. 1) of the data processing. A health care provider uses the terminal at his or her office to enter information into a remote processor.

That some or all of the data processing must occur in the remote central processor is confirmed by element 1(d) which further recites the interaction between the input means and the central processor.

The extrinsic evidence confirms that was the understanding of a "terminal" in the early nineties. The Microsoft Press Computer Dictionary (2d ed. 1994), defined a terminal as:

> A device consisting of a video adapter, a monitor, and a keyboard. The adapter and monitor and, sometimes, although less commonly, the keyboard are usually combined in one unit. A terminal does little or no

> computer processing on its own; instead it is connected to a computer with a communications link over a cable. Keyboard input is sent from the terminal to the computer; video output is sent from the computer to the terminal.

H113.

At the hearing, Mr. Kucler, for Highmark, explained,

> "(I)t's not . . . what is in the structure that defines the difference between a terminal and a personal computer. In fact, it's the functionality." Hrg.
>
> Trans. at 64-65.
>
> "Whether or not the terminal includes a microprocessor is not the issue.
>
> It's how that microprocessor is used . . .
>
> (W)hat has to be present in terms of definition is the fact that it has data that it sends out or data that it can receive, but the processing of that data does not happen on board the terminal." *Id.* at 70-71.

That is consistent with the description in the patent wherein the physician office terminal sends data to the central processor for processing.

However, the addition of processing *capability* to the terminal, e.g., a PC, does not preclude it from functioning as a terminal if the PC is used as an input device to connect a user to a remote computer or processor for data processing.

Thus, it is recommended that the structure described in the specification for performing the function of 1(a) is:

> "A physician's office terminal, including a visual display, and a keyboard or card reader, for entry of data and connected, directly or indirectly, to a remote central computer for some or all of the processing of the entered data."

In the *Trigon* rulings, the physician's office "terminal" was construed to not be limited to a dumb terminal, but to also include keyboards and personal computers. A435-36. In my opinion, the best procedure for construing a § 112-6 means is to identify the structure described in the specification for performing the claimed function, rather than to define what other structures might be covered.

C. Claim element 1(b):

"data bank memory interconnected with said input means, said data bank memory including an identification of predetermined procedures requiring utilization review"

Introduction and Stipulations

"Said input means" recited in element 1(b) finds its antecedent in the input means of element 1(a) and thus must be the same "input means" as defined above for element 1(a).

"(P)redetermined" has the same meaning as in element 1(a), i.e. "determined in advance."

The parties have stipulated that:

(i) "a data bank memory" is to be construed as "a database"; JCC5/A466; Hrg. Trans. at 88,

(ii) element 1(b) is to be construed as "a data base that is interconnected with the input means, and that includes within its memory a list of preselected procedures requiring utilization review;" JCC5-6/A466-67,

(iii) "procedures" include both medical and surgical procedures. JCC6/A467, and

(iv) "including" means "taking in as a part; containing." *Id.*

"Procedures"

As noted above, the parties have stipulated that the term "procedures" includes both medical and surgical procedures. Highmark urges that it is ***limited*** to medical and surgical procedures. That was not raised in the Joint Claims Statement, nor in Highmark's Opposition to the Motion for Claim Construction, nor at the hearing. Highmark has not cited any support in the intrinsic or extrinsic evidence for its proposal. Highmark's proposed amendment to the stipulated meaning is not recommended.

"Interconnected"

Highmark contends that "interconnected" means "physically, electrically, and reciprocally connected," citing a technical dictionary for "physically" and "electrically" and a non-technical dictionary for "reciprocally." HPH5; JCC6/A467. Allcare contends that "interconnected" means either "joined by a communication path" or "joined physically and electrically." APH1.

The specification discloses that the physician's file 44 and the insurance file 18 each contain the claimed utilization review data. '105 Patent, 4:53-62; 6:67-

7:2. In the system illustrated in Fig. 1 those files are shown as connected to the central processor 10 which in turn is connected to the remote physician office terminals 11a-11c. In the system illustrated in Fig. 3, the physician file 44 may be located in the health provider's office and connected to a microprocessor 60 which, in turn, is connected to the physician office terminal 11a. *Id.* 7:50-55.

In the specification, the central processor 10 and the remote physician terminals 11a-11c are described as "interconnected . . . by conventional communication paths". *Id.* 4:7-10. The connection for utilization review is described as a "communication link" *(Id.* 2:65-3:2) and the connection between "utilization review" and the central processor as described as a "link" *(Id.* 6:25-28). The terms "link," "linked," and "communication links" are used repeatedly in the specification to describe similar connections between various elements of the systems shown in Figs. 1 and 3 whether the connected elements are in the same location or in different locations. None of the terms "physically" nor "electronically," nor "reciprocally" is used in the specification to describe the connection between any of those various elements.

It is not clear that the link between the physician office terminals and the central processor, is reciprocal. The specification does describe utilization review as a process in which information must flow in both directions between the physician, the central processor and the physician files. *Id.* 9:67-10:17. The physician enters data identifying the proposed treatment, the system compares that with the

recommended treatments stored in the physicians file, and notifies the physician of any discrepancy.

However, a monitor 14 or 66 may be located in the physician's office to receive that notification. *Id.* 4:14-21; 7:61-65. Presumably, the utilization review results need only flow back to the monitor and not to the physician terminal. Thus, the link between the central processor and the physician's office terminals may or may not function reciprocally.

As both parties agree that the "interconnection" is "physical and electrical," the Court may choose to adopt the construction of "joined physically and electronically." However, I am concerned that it may not be apparent to a non-technical person whether the "links" between the geographically remote elements are physical and electrical connections, and it is not discussed in the specification. The proposed construction of "physically and electronically connected" would require further construction of what those two terms mean.

Claim element 1(b) uses the term "interconnected" while element 1(d) uses the term "in communication with." That is an indication that the inventor differentiated between those two terms. However, the only use of the term "interconnected" in the specification indicates that communication links and interconnections are closely related, if not the same. *Id.* 4:7-10. In view of the potential confusion of the jury as to the meaning of "physically and electronically connected," and the absence of any use of those terms in the specification, it is recommended the term "interconnected" in 1(b) be construed to mean "joined by a communication path."

"Utilization Review"

The claim recites "identification of predetermined procedures requiring utilization review." The patent specification describes Insurance Company File 18 as including information regarding treatments and procedures for which utilization review is required. *Id.* 4:53-60. The parties disagree as to the meaning of "utilization review."

Utilization review is not expressly defined in the intrinsic evidence. Allcare contends that "utilization review" should be construed as "review of the medical necessity *or* efficiency or quality of patient care, prospectively, concurrently, or retrospectively." (Emphasis added.)

Highmark contends that "utilization review" should be construed as "the review for medical necessity ***and*** efficiency or quality of health care services, either prospectively, concurrently or retrospectively." HPH5 (Emphasis added.)

Allcare also offers an alternative construction of "whether care is medically necessary or appropriate, regardless of whether the review occurs prospectively, concurrently or retrospectively."

The specification describes the system as addressing the question of whether a proposed pattern of treatment is "appropriate." '105 Patent, 9:67-10:2. The physician or staff member enters data identifying the proposed pattern of treatment, which the system compares with the stored recommended treatment protocols and indicates any problem differences. *Id.* 10:3-8.

The specification describes utilization review as facilitating claims compliance with applicable

criteria. *Id.* 11:32-33. The physician enters codes to indicate the patient visit, treatment and the like. *Id.* 11:32-36, box 127, Fig. 6. The system compares that information to the information in the Insurance Company File 18 and determines whether the treatment protocol meets "applicable criteria" of the insurer or other payer. *Id.* 6:19-25; 11:37-43, box 129, Fig. 6. If the criteria is not met, a discussion with a nurse ensues. If approval is still not obtained, the matter is referred to the Medical Director, and then possibly referred for peer review. *Id.* 11:44-55, box 128, 131.

The specification discloses that the applicable criteria for utilization review:

> "may be tailored to meet criteria established by one or more users of the System.
>
> Thus, selected levels of expense, types of procedures, length of expected
>
> hospitalization, specific illness, categories of illness or other criteria may be
>
> utilized to identify those items for which utilization review is indicated."
>
> *Id.* 13:61-67.

The specification also discloses utilization review as used for quality control. *Id.* 13:68-14:24. This preferably occurs after treatment. *Id.* 14:4-11. The specification describes cost, treatment results, referral matters, other opinions, and cost effectiveness as factors that may be considered for the quality control aspect of utilization review. *Id.* 14:12-18.

The specification does not specify "medical necessity" or "medically necessary" as one of the

applicable criteria used in utilization review. However, the parties agree that it is apparent from the specification as a whole and from the knowledge in the art, that "medical necessity" is a principle criteria. "(A)ppropriate" is used several times in the specification as one of the criteria. The parties agree that the word "appropriate" is not sufficiently definite to be a criteria for utilization review and refers to "medical necessity." Hrg. Trans. at 125-134. The specification does mention "improving efficiency" as a feature of the integration aspect of the invention but not specifically a feature of utilization review. 2:22-27. With respect to utilization review, it does specify "cost effectiveness," (14:15) and other factors which may indicate "efficiency" as a criteria. 13:61-67.

The variability of the examples given, and the references in the specification to the flexibility of the applicable criteria for utilization review cautions against the use of "and," which would require each of multiple criteria. Accordingly, it is recommended that "utilization review" be construed as "review of the medical necessity or the efficiency or the quality of health care services, either prospectively, concurrently, or retrospectively."

The *Trigon* rulings construed "utilization review" to mean "the review of care by a managed care organization to ensure that medical services are medically appropriate or necessary." The *Trigon* Court found that to be the "full and plain meaning" which was broader than cost effectiveness. A432-33. Although that construction is not inconsistent with the intrinsic record, I have chosen a construction also

consistent with the intrinsic record, but more nearly reflecting the proposals of the parties.

D. Claim Element 1(c):

"payment means"

Element 1(c), is stipulated to be a means-plus-function element governed by 35 U.S.C. § 112, ¶ 6. JCC9/A470.

The claimed function is "payment" which is stipulated to mean "the act of paying what is due or accrued." *Id.*

The specification expressly describes automated funds transfer for payment. 3:23-26; 13:43-48; 14:54-57. The parties agree that this refers to what is commonly known as electronic funds transfer ("EFT"), and that a computer programmed to perform EFT qualifies as "corresponding" structure described in the specification for performing the payment function. 35 U.S.C. § 112, ¶ 6; Highmark's Opp. at p. 30; Allcare's Reply at p. 9. EFT is a direct electronic transfer by which a sum is deleted from the payer's account and credited to the payee's account. See Kurtyka decl. ¶ 4d, A603. The parties disagree as to whether structure for automating a check is described as an alternative "corresponding" structure for performing the claimed "payment" function. Automating a check would be the system automatically printing a computer generated check drawn on the payer's account. See Hrg. Trans. at 108; Singer Decl. ¶ 8, A533-34.

The specification states that "a variety of medical payment systems" existed in the prior art, and gives U.S. Patent Nos. 4,491,725 (Pritchard) and 4,858,121 (Barber) as examples, (1:14-19). However, structure

supporting a means-plus-function claim must appear in the specification. Material incorporated by reference into the specification cannot satisfy the requirement for description in the specification of corresponding structure. *Atmel,* 198 F.3d at 1380-82. Thus, the disclosures of the Pritchard and Barber patents cannot be relied upon for description of "corresponding structure."

The parties disagree as to whether the medical payment systems of the Barber and Pritchard patents disclose automating the writing of a check. Because the disclosures of Barber and Pritchard, as material incorporated by reference, cannot be relied upon for description of "corresponding structure," this dispute is moot and I have not considered it.

If the title of a publication appears in the specification and the title alone is sufficient to indicate to one skilled in the art the precise structure of the claimed means, the disclosure of that title alone is sufficient for description of corresponding structure. *Id.* In *Atmel,* the Court held that disclosure of the title of an article ". . .NMOS Integrated Circuits . . ." could serve as description of corresponding structure if it was sufficient description of specific structure for one skilled in the art. *Id.*

However, the NMOS Integrated Circuit of *Atmel* apparently was a well-known specific circuit structure whereas "medical payment systems" is much more general than either the NMOS Integrated Circuits disclosed in *Atmel* or the automated funds transfer (EFT) disclosed in the '105 patent. When a patent specification discloses a specific structure corresponding to the "means" in a

means-plus-function limitation subject to § 112-6, and also indicates only generally that other structures may be used, the claim is limited to the disclosed specific structure and its equivalents. *Fonar* 107 F.3d at 1551-52.

Allcare's expert, Charles J. Singer, testified that computer generated check-writing was the standard medical payment system in the industry *circa* 1990, and that a person skilled in the art would understand the term "a variety of medical payment systems" to mean those computer systems used by medical insurance companies to pay claims for medical services by printing a computer generated check or creating a payment file for EFT. Singer Decl. ¶ 8, A533-34.

Allcare has stipulated that "payment means" in the claim is a means-plus-function element subject to § 112-6. Implicit in that stipulation is an admission that "payment means" is insufficient recitation to disclose structure for performing payment. 35 U.S.C. § 112, ¶ 6; *see Greenberg,* 91 F.3d at 1583; *TurboCare v. General Elec. Co.,* 264 F.3d 1111, 1121 (Fed. Cir. 2001). Mr. Singer does not explain how mere reference in the specification to "a variety of medical payment systems" would disclose both EFT and computer generated check structure to one skilled in the art, but the recitation in the claim of "payment means" would not disclose any structure for payment.

Without an explanation of this apparent inconsistency, Mr. Singer's declaration testimony is not persuasive as to the description in the specification of automating a check.

Moreover, structure described in the specification is "corresponding" structure only if the specification or prosecution history clearly links or associates that structure to the function recited in the claim. Although prior art structure disclosed in the specification may be "corresponding structure" under § 112-6, it must be clearly linked to the claimed function. This duty to link is the *quid pro quo* for the convenience of employing § 112-6. *B. Braun Medical, Inc. v. Abbott Laboratories*, 124 F.3d 1419, 1424 (Fed. Cir. 1997). It is not enough that a structure disclosed may be capable of performing the claimed function. The disclosure must include a "clear link or association" between the disclosed structure and the claimed function. *Medtronic, Inc. v. Advanced Cardiovascular Systems, Inc.*, 248 F.3d 1303 (Fed. Cir. 2001).

Here the specification states that "a wide variety of automatic transfer of funds" could be employed. The parties agree that "automated transfer of funds" means EFT. The specification does not suggest that payment by automating checks could be used in this invention.

Construction of an element recited in means-plus-function claim form is strictly limited by the statute. A Section 112-6 element does not cover all means for performing the claimed function. It covers only the corresponding structure described in the specification and clearly linked in the specification to the claimed function. *B. Braun*, 124 F.3d 1419, 1424. The '105 specification does not sufficiently describe and link structure for automating a check to satisfy the requirements of § 112-6 as "corresponding structure."

Thus, it is recommended that the structure described in the specification for performing the payment function is "a computer capable of performing electronic funds transfer." Of course, a § 112-6 element covers the structure disclosed and equivalents thereof. 35 U.S.C. § 112 ¶ 6: Whether or not a computer capable of automating a check is equivalent to the disclosed computer capable of performing electronic fund transfer is a question of infringement for the trier of fact, not an issue to be resolved as a matter of law in the process of claim construction.

The *Trigon* rulings found the algorithm of Fig. 8 and the disclosure of "medical payment systems" to be a disclosed alternative corresponding structure for "payment means" under § 112 -6. A436. I respectfully disagree for the reasons stated above.

E. Claim Element 1(d):

"means in communication with said input means responsive to input of data through said input means symbolic of symptoms of one of said predetermined plurality of persons for tentatively identifying a proposed mode of treatment for said one of said predetermined plurality of persons and, when said proposed mode of treatment includes one of said predetermined procedures requiring utilization review, for producing indicia indicative thereof and for preventing payment therefore by said payment means until said utilization review has been obtained and data indicative thereof has been entered in said system."

Stipulations

The parties have stipulated that:

i) element 1(d) is a means-plus-function element and is governed by 35 U.S.C. § 112, ¶ 6; JCC10/A471, and

ii) element 1(d) is to be construed as, "a computer system in communication with the input means, responding or replying to the entry of one or more items of information through the input means, which computer system is capable of performing at least three tasks." JCC10-11/A471-72. However, the parties disagree as the three tasks and the structure necessary to carry out such tasks. *Id.*

Introductory Clause

The "means" of 1(d) must be "in communication with said input means." "Said input means" finds its antecedent in element 1(a) and should be construed in the same way as for element 1(a).

The parties agree that "communication" means:

> "data transfer from one computer to another through a communications medium, such as a telephone, microwave relay, a satellite link, or a physical cable," *citing* Microsoft Press Computer Dictionary, Second Edition (1994); and Webster's New World Dictionary of Computer Terms, Third Ed. (1988). JCC14, 20/A475, 481.

Allcare proposes that "in communication with" means "the receipt or exchange of data." Highmark proposes that it is limited to the receipt or exchange of data "via a modem."

The specification discloses a modem in the Fig. 3 embodiment and states that a conventional modem is

preferably used for communication between the central processor 61 and a micro processor 60 located in each physician's office. '105 Patent, 7:47-50. However, the Fig. 1 embodiment does not specifically disclose a modem for such communication, stating that the physician office terminals are interconnected to the central processor "by conventional communication paths" *(Id.* 4:10) and that other connections of various elements also are by "communication links" without specifying a modem. *Id.* 5:51-52, 67, 68; 6:1.

In view of the repeated use of the broader term "communication links" in the specification, and the agreement by the parties that "communication" medium includes microwave relay, satellite link, or physical cable, as well as a telephone (modem), it would be improper to limit the claim term "in communication with" to the preferred modem connection of the embodiment of Fig. 3.

Therefore, it is recommended that the term "in communication with" in 1(d) be construed as "the receipt or exchange of data."

The First Function

The first recited function for the claimed "means in communication with said input means" is:

> "responsive to input of data through said input means symbolic of symptoms of one of said predetermined plurality of persons for tentatively identifying a proposed mode of treatment for said one of said predetermined plurality of persons. . . ."

Accordingly, the claimed "means" must tentatively identify a proposed mode of treatment, and it must

do so in response to input of the specified data through the input means.

Stipulations and Agreements

(i) "Data" means "an item (or items) of information;" JCC3/A464,

(ii) The parties both construe "data symbolic of" as "information expressed in a symbolic or representative manner pertaining to;" APH2; HPH8,

(iii) The parties agree that "symbolic" means:

"of or pertaining to, or expressed by means of a symbol or symbols, *i.e.*, something that represents something else by association, resemblance, or convention;" JCC15/A476; APH2,

(iv) The parties agree that "identify" is to be construed as:

"to recognize as being; establish the identity of someone or something;" JCC17, 23; A478, 484,

(v) The parties agree that "for" is construed as "used to indicate the aim, or purpose of an action or activity;" APH3; HPH8; and

(vi) The parties substantively agree on the construction of "tentatively," (APH2; HPH8). Consistent with the proposals of both parties, it is recommended that "tentatively" be construed as "non-finally, provisionally."

"Responsive"

Allcare proposes that "responsive" be construed as "responding, answering or replying" (APH2) while Highmark proposes construction as "answering or

replying; responding" (HPH8). Neither the arguments of counsel nor the intrinsic record focus on the difference, if there is any. Thus, it is recommended that "responsive" be construed as "responding, answering or replying" which is the clearer of the two proposals.

"Symptoms"

In the Joint Claim Construction Statement, and in its brief, Highmark contended that a symptom must be subjective, i.e. perceived by the patient. JCC15-16/A476-77; Highmark's Opp. at p. 34.

Although Highmark finds some support in the extrinsic evidence, there is not any description in the specification that so limits the term "symptom." In fact the specification refers to the physician correlating the "observed" patient symptoms, without limiting them as to who observed them.

The diagnostic smart system is described as correlating "symptoms" entered by the physician with a list of the most likely medical condition corresponding to such "symptoms." There is no indication in the specification that a physician would not input information about a problem such as a cancerous growth on the back perceived by the physician and not by the patient. That would be an artificial distinction and would defeat the objective of the claimed managed healthcare system to provide "comprehensive" care.

Prior to the hearing, I proposed that "symptom" be construed as "a noticeable change in a patient's condition indicative of some bodily or mental state". In its post hearing submission, Allcare accepted that construction. APH2. In its post hearing submission, Highmark withdrew its contention that a symptom

must be subjective and accepted the definition of "symptom" as I proposed, if "disease or disorder" were substituted for "state." HPH8; See Hrg. Trans. at 166.

The specification discusses symptoms usually associated with the most commonly encountered "diseases and other ailments" as being stored in the Physician File 44, (6:55-59), as well as "illnesses" and "medical conditions" corresponding to patient symptoms (6:59-67). Allcare points out that a medical condition such as pregnancy is not a disease and may not be a disorder. Thus, "disease, disorder or other medical condition" seems appropriately inclusive and consistent with the specification.

Therefore, it is recommended that "symptom" be construed as:

"a noticeable change in a patient's condition indicative of some bodily or mental

disease, disorder or other medical condition."

"Input Of Data"

Highmark proposes that "input" be construed to mean:

"information entered into a computer for processing, as from a keyboard or from a file stored on a disk drive. Normally used as a noun or adjective, the word is often used as a verb to mean entering information." JCC15. A.476; HPH8.

Allcare does not offer a proposed construction for "input."

Input in the phrase "responsive to input of data" is used as a verb; thus, the reference to its use elsewhere as a noun or adjective is extraneous.

Moreover, the claimed "input of data" is recited as being "through said input means," i.e., a physician office terminal, not from a file stored on a disk drive. The physician office terminals 11 a-11c have not only a manual data entry keyboard 55, but also a card reader 52, either of which can be used to enter data into the central processor 10. 7:17-38.

Thus, Highmark's proposed construction can be simplified and adapted to the context of the claim read in the context of the specification as:

> "entry of information from the input means of element 1(a) into a computer for processing."

It is recommended that this construction be adopted for the phrase, "input of data".

"one of such predetermined plurality of persons"

A "predetermined plurality of persons" was construed above in regard to element 1(a). Here the claim recites, "one" of that group instead of "each" of that group. Highmark proposes that "one" be construed to mean "a member" referring to a single person from the group. JCC16. A477.

This phrase relates to the description in the specification of a single participant using the system. '105 patent, 8:55-9:1.

Allcare offers no proposed construction for "one" in this phrase. Highmark's proposed construction is consistent with the intrinsic record and is recommended.

"Proposed mode of treatment"

Allcare proposes that this term be construed as "a suggested method of the application of remedies or therapies to a patient for a disease or injury." APH2.

Highmark proposes "a suggested method of the management and care of a patient to combat disease or injury." HPH9.

The two proposed definitions differ only as to the meaning of "treatment."

Highmark's proposed construction for "treatment" is from a medical dictionary (Dorland's Illustrated Medical Dictionary 28th Ed.; *see* JCC17-18/A478-79), while Allcare's apparently is adapted from two non-technical dictionaries. (The American Heritage Dictionary Second College Edition 1982; The American Heritage Dictionary Third Edition 1992; *see* JCC21-22/A482-83.) In the JCC, each party also proposed the same definition, as later proposed by the other in their respective Post Hearing Statements. See JCC17-18/A478-79 and JCC21-22/A482-83.) The specification is of no help in choosing between these definitions, nor is the remainder of the intrinsic record. Each seems suitable. Generally, for technical terms, technical dictionaries are preferred over non-technical ones. *Phillips*, 415 F.3d at 1318. Thus, I recommend Highmark's proposed construction, modified to be consistent with the meaning of "symptoms" above, as follows: "a suggested method of the management and care of a patient to combat bodily or mental disease, disorder or other medical condition."

Structure for the first function

Next, the corresponding structure described in the specification for performing the first function must be identified.

The specification describes a diagnostic smart system that aids a physician or other provider in developing a diagnosis based on patient symptoms.

The diagnostic smart system includes a Physician File 44 which stores data including an identification of the most commonly encountered diseases and other ailments, together with their usual symptoms. '105 Patent, 6:55-59. Data describing the symptoms of the patient is entered into one of the terminals 11a-11c to assist the physician in making a diagnosis. *Id.* 6:59-61; 9:57-60. This data must be entered using some symbols, even if only alphabetical letters spelling the name of the symptom.

Through the terminal, the physician requests identification of the corresponding illness from the central processor 10. *Id.* 6:59-63. The central processor interrogates the Physician File and the system prepares a list of the most likely medical condition and identifies the recommended treatment. *Id.* 6:63-67; 9:59-60. Thus, the computer assists the physician in correlating the patient symptoms, so as to identify the most likely causes of the health problem, to complete his or her diagnosis, and to prescribe the most appropriate treatment. *Id.* 9:60-65.

In summary, the physician enters data representing symptoms of the patient. In response, the computer identifies the most likely causes of those symptoms and identifies the recommended treatment. This recommended treatment is tentative in that the physician does not necessarily accept it. The physician then completes his or her diagnosis.

This description of the diagnostic smart system matches very well with the 1(d) claim language that data "symbolic of symptoms" is entered "through said

input means," i.e., one of the physician office terminals, to "means (the central processor) in communication with" the terminal; and the processor is "responsive to" that symptom data, and "tentatively identifies a proposed mode of treatment."

Thus, one of ordinary skill in the art would conclude from the specification that symptoms are the input and a proposed mode of treatment is the output of both the diagnostic smart system described in the specification and the means claimed for performing the first function of 1(d).

Allcare contends that the utilization review smart system is an alternative embodiment for performing the first function of element 1(d) .

The specification describes the utilization review smart system as addressing the question of whether a proposed pattern of treatment is appropriate. *Id.* 9:67-10:2. The utilization review smart system is used after the diagnostic smart system to determine whether a proposed treatment requires utilization review. See Fig. 5; and Fig. 6. The utilization review starts with the *physician* entering "data identifying the proposed pattern of treatment," *i.e.*, the pattern of treatment proposed by the physician. *Id.* 10:3-5. The utilization review smart system then "compares the proposed pattern of treatment with the . . . recommended treatment protocols and provides an identification of any problem differences." *Id. 10:5-8;* see also 10:13-17, and 11:5-10. If the entered codes "do not meet applicable criteria," "there will ensue a treatment discussion with a nurse." *Id.* 11:44-50. Thus, the input of the utilization review smart system is identification of a treatment proposed by

the physician and the output is approval or disapproval of the proposed treatment. That differs substantially from the language of 1(d) that the processor, "responsive" to a description of "symptoms," "tentatively identif(ies) a proposed mode of treatment."

"The construction that stays true to the claim language and most naturally aligns with the patent's description of the invention will be, in the end, the correct construction." *Phillips,* 415 F.3d at 1316. Here, that dictates that structure for performing the first function of 1(d) is the diagnostic smart system, not the utilization review smart system.

Allcare contends that the ICD9 codes disclosed at 11:9-36 as used by the physician to input a proposed treatment can be "symbolic of patient symptoms." However, the specification describes the ICD9 codes as indicating a treatment, not symptoms. Allcare contends that the specification shows entry of ICD9 codes to describe "reasons for visit," which would include symptoms. Allcare Opening Brief p. 26. However, the cited portion of the specification only describes entry of "patient visit, treatment and the like," not "reason for visit." '105 Patent, 11:35. Patient visit more likely would be entry of the fact that the patient did visit the physician, and there is no indication in the specification that it includes identification of symptoms.

Allcare next refers to the Mohlenbrock Patent No. 5,018,067, cited in the prosecution history which states that the "ICD-9-CM coding system . . . is a classification of diseases, injuries, impairments, symptoms, medical procedures, and causes of death." A204. However, the '105 specification makes no

mention of using ICD-9 codes for entry of symptoms in practicing the '105 invention and, at 11:32-56 relied upon by Allcare, describes entry of proposed treatment, not of symptoms.

Allcare contends that the ICD Manual describes the entry of codes identifying symptoms instead of a diagnosis, *e.g.*, where no more specific diagnosis can be made. Allcare Opening Brief, p. 27-28; Holland decl., ¶ 14, A552. While in some limited circumstances ICD9 codes may be used to indicate symptoms where it is not practical to describe the diagnosis any other way, the '105 specification makes no mention of such use of ICD9 codes. Every instance in which "symptom" is used in the specification refers to the diagnostic smart system.

The *Trigon* rulings found that the utilization review smart system is an alternative structure disclosed as the corresponding structure. A437. I disagree for the reasons stated above.

Allcare contends that the diagnostic smart system is only an "optional" feature, citing the `105 patent at 1:60-69. However, the claims define the invention. Whether the specification states a claimed feature to be optional has no bearing on whether it is an element of the claim. The diagnostic smart system is the only "corresponding structure" described in the specification and thus is required in element 1(d). *See Frank's Casing Crew v. Weatherford Intern.*, 389 F.3d 1370, 1378 (Fed. Cir. 2004).

Thus, the structure disclosed for performing the first function is a computer system capable of performing the described diagnostic smart system.

The Second Function

> "when said proposed mode of treatment includes one of said predetermined procedures requiring utilization review, for producing indicia indicative thereof..."

Accordingly, the claimed means must produce indicia indicative of the need for utilization review, if the identified proposed mode of treatment requires utilization review.

Each of the disputed terms in the phrase "when said proposed mode of treatment includes one of said predetermined procedures requiring utilization review" has the same meaning as construed above in construing element 1(b) ("predetermined procedure" and "utilization review") and element 1(d) ("proposed mode of treatment"). In addition, the parties have stipulated in relation to Claim element 52(c) that this phrase means:

> "when one or more ways of medically or surgically treating a patient that is put forward for consideration, discussion or adoption includes a pre-selected treatment that requires utilization review, as properly construed, the system causes to exist a sign, indication or identifying mark indicating that utilization review is required for such proposed treatment." JCC38/A499.

The phrase must be given the same meaning here.

"For producing indicia indicative thereof."

Highmark proposes that this function be construed as "to display a sign or indication that utilization review is required for a proposed treatment." JCC18/A479; HPH9.

Allcare proposes the construction as:

> "to display one or more identifying marks or indications signifying that utilization
>
> review is required for a proposed treatment" or
>
> "to provide one or more identifying marks or indication signifying the need for utilization review." JCC27/A488

Neither the arguments of the parties nor the specification focuses on the difference between these definitions nor is helpful in selecting between them. The record does not indicate that this phrase was given a special meaning in the patent. All three proposed constructions are consistent with the intrinsic record. Highmark cites a dictionary definition of "indicia" as "signs; characteristic marks; indications; tokens." Webster's New Twentieth Century Dictionary, Unabridged Second Ed. (1982). JCC18/A479.

Allcare proposes that "indicative" be construed as "signifying," citing the same dictionary. JCC22/A483.

Combining the cited dictionary definitions for "indicia" and "indicative", it is recommended that "producing indicia indicative therefore" be construed as:

> "displaying a sign or indication signifying that utilization review is required for such proposed treatment."

That is the ordinary and customary meaning as it would be understood by one of ordinary skill in the art in the context of the patent.

Structure for the Second Function

The parties agree that the second function correlates to the utilization review smart system. Allcare Brief, pp. 32-34; Highmark Opp., p. 42. This is consistent with the specification which describes the health care provider entering into the utilization review smart system, data identifying the proposed treatment; the system comparing that data with the recommended treatment protocols stored in the system; and the system providing an indication of any problem difference and whether, under the applicable criteria, utilization review is required. '105 Patent, 6:13-28, 9:67-10:8; 11:32-50

Thus, the corresponding structure disclosed for performing the second function is a computer system capable of performing the described utilization review smart system.

The Third Function

> "preventing payment therefore by said payment means until said utilization review has been obtained and data indicative thereof has been entered in said system."

The parties have stipulated that:

(i.) "prevent" means "to stop or keep from doing something; to keep from happening; to make impossible by prior action:" JCC19, 22/A480, 483, and

(ii.) "obtain" means "to get possession of, especially by trying; to procure;" JCC20, 23/A481, 484.

Allcare proposes that this function be construed as:

"preventing payment for the treatment identified by the system as requiring utilization review until said utilization review has been performed and an indication of the completion of utilization review having been performed has been entered into the system." JCC28/A489.

Highmark proposes:

"stopping the electronic transfer of funds for services rendered by a provider until the quality control review for cost effectiveness has occurred and an identifying mark indicating such utilization review is put into the comprehensive health care management system."

This third function does not appear to be expressly described in the specification or drawings. The specification discloses payment being made (3:22-26; 13:43-48; 14:54-57) but does not expressly discuss preventing payment until utilization review is completed. Allcare contends that the flow chart of Fig. 8 and the accompanying text at 13:34-40 provide such a description. The *Trigon* rulings agreed. A436. However, Fig. 8 and the accompanying text describe only checking whether the claim codes "are accurate" and conform with applicable criteria, not whether utilization review has been completed. See Kurtyka decl., ¶ 4b, A602. Fig. 8 and the accompanying text are not helpful in understanding the meaning of the claim terms.

Lacking meaningful guidance from the specification, it is recommended that the following construction be adopted in order to clarify the language:

"stopping payment by the payment means for the treatments identified by the system as

requiring utilization review until said utilization review has been completed and an indication of such completion has been entered into the system."

Structure For Performing Third Function

For the same reason as discussed above regarding the failure of the specification and drawings to describe the third function, they also do not specifically disclose any structure for performance of the third function.

Allcare points to the reference in the '105 patent to "a variety of medical payment systems have heretofore been proposed . . ." as a description in the specification of structure for performing the third function. Allcare relies on Mr. Singer's testimony that such prior art medical payment systems had the ability to "adjudicate" claims, and Dr. Nobel's testimony that "adjudication" means the review of a claim to determine whether it will be paid. Singer Decl. 8, A533-34; Nobel Dep. p. 117:15-118:25; A687.1-687.2. However, neither Mr. Singer nor Dr. Nobel mention payment being prevented because utilization review was required and not yet performed. Thus, the reference to "a variety of medical payment systems..." is insufficient for disclosure in the specification of structure for performing the third function.

Presumably the structure would be "a computer system capable of stopping payment for treatments identified by the system as requiring utilization review until such utilization review has been completed and an indication of such completion has been entered into the system."

Structure For Three Functions Of 1(d)

Thus, the corresponding structure for performing the three functions of element 1(d) is:

> A computer system capable of performing the described diagnostic smart system, and the described utilization review smart system, and capable of stopping payment for treatments identified by the system as requiring utilization review until such utilization review has been completed and an indication of such completion has been entered into the system.

VII. CLAIM 52

A. Introduction

While Claim 1 is an apparatus claim directed to the computerized system itself, Claim 52 is a method claim directed to the steps carried out in using the system. The parties have stipulated that where identical terms are used in both claims, they should be construed in the same way in both claims. JCC30/A491. Subject to that stipulation, each claim must be construed based on the elements it recites, and there is a presumption that differences between the claims raise different meanings.

B. Preamble

"A method of managing a comprehensive health care management system utilizing a data processor, data bank memories, input means and payment means comprising:"

Stipulations

The parties have stipulated that:

a) "Managing" means "directing or administering;" JCC30/A491.

b) "Comprehensive health care management system" has the same meaning in the preamble of Claim 52 as in the preamble of Claim 1; *Id.*

c) Preamble elements, "data processor," "data bank memories," "input means," and "payment means" are all claim limitations; JCC31/A492.

d) A "data processor" is:

"a device or system capable of performing operations upon data to achieve a desired goal, such as a central processing unit (CPU) or the use of one or more computers, *e.g.*, personal computer, mainframe, central processing system, microprocessor or the like;" JCC31/A492.

For clarification, it is recommended that this construction be adopted in the following revised form:

"a device or system capable of performing operations upon data to achieve a desired goal. A data processor may be a central processing unit (CPU) or one or more computers such as personal computers, mainframe computer, microprocessors, or the like;" *Id.*

e) "Input means" and "payment means" are means-plus-function elements governed by 35 U.S.C. § 112, ¶ 6; JCC31-32/A492-93, and

f) "data bank memories;" "input means;" "payment means;" and "comprising" are to be construed as in Claim 1. JCC30/A491

There appears to be no stipulation in the record that the entire preamble of Claim 52 is a limitation of the claim. It is stipulated that certain structures recited in the preamble are claim limitations, and that the preamble of Claim 1 is a limitation of Claim 1. The body of Claim 52 repeatedly references the structures recited in the preamble as antecedents. Therefore, it is recommended that the entire preamble of Claim 52 be found to be a limitation of the claim.

C. Element 52(a)

"entering into said data processor data identifying each of a predetermined plurality of persons."

Claim element 52(a) is generally similar to element (a) of Claim 1; but element 52(a) is a method step, not governed by § 112, ¶ 6. Thus, construction of element 52(a) does not employ a § 112-6 analysis.

"Said data processor" finds its antecedent in the preamble and must be given the same construction as in the preamble.

The term "entering" is stipulated to mean "the act or process of inputting information." JCC35/A496.

The claim term "data identifying each of a predetermined plurality of persons" must be given the same construction as the same phrase in 1(a); *See*, JCC30/A491.

Claim 52 does not specify that the input means is used to enter the claimed data. The specification does not say whether the entry of the identity of each authorized person described at 8:3-8 is done through a data terminal at a "company personnel department" or "insurance company" ('105 patent, 8:7), or through a single physician's office terminal,

or the collective plurality of physician office terminals 11 a-11 c. The issue of how the data is entered need not be resolved for construction of this claim which does not specify any particular input terminal(s).

D. Element 52(b)

"entering into one of said data bank memories an identification of predetermined procedures requiring utilization review."

All terms of this element have been construed above, and have the same meaning here.

E. Element 52(c)

"entering through said input means into said data processor data symbolic of patient symptoms for tentatively identifying a proposed mode of treatment and, when said proposed mode of treatment includes one of said predetermined procedures requiring utilization review, producing indicia indicative thereof."

Stipulations

The parties have stipulated that:

(i) claim element 52(c) is construed to be "the step of introducing or inputting one or more items of information through a physician's office terminal," but disagree as to the scope of *"data symbolic of patient symptom for tentatively identifying a proposed mode of treatment"*; JCC37-38/A498-99.

(ii) "*when said proposed mode of treatment includes one of said predetermined procedures requiring utilization review, producing indicia indicative thereof*" is construed as "when one or more ways of

medically or surgically treating a patient that is put forward for consideration, discussion or adoption includes a pre-selected treatment that requires utilization review, as properly construed, the system causes to exist a sign, indication or identifying mark indicating that utilization review is required for such proposed treatment." JCC38/A499.

"Data Symbolic of Patient Symptoms for Tentatively Identifying a Proposed Mode of Treatment."

"Symbolic," "data symbolic of," "symptom," "for," "tentatively," "identify," and "proposed mode of treatment" were construed in construing the first function of element 1(d) above and have the same meaning here. Although this phrase in element 52(c) is not governed by § 112-6, while element 1(d) was, § 112-6 does not invoke any special rules for construing the *function* of a means-plus-function element. *Cardiac Pacemaker,* 296 F.3d at 1113. It is the need to identify the "corresponding structure" that is unique to construction of a § 112-6 element. Thus, the analysis of these terms in construing them in relation to the first function of 1(d) is applicable here, but the analysis of the structure for performing that function in 1(d) is not applicable here.

Neither party has proposed that the claim term "patient" needs to be construed.

Thus, consistent with the prior construction, the meaning of "data symbolic of patient symptoms for tentatively identifying a proposed mode of treatment" is:

"information expressed in a symbolic or representative manner pertaining to a noticeable change in a patient's condition indicative of some bodily or mental disease, disorder or other medical condition for tentatively identifying a suggested method of the management and care of a patient to combat disease or injury;

where:

(i) "symbolic" means "of or pertaining to, or expressed by means of a symbol or symbols, i.e., something that represents something else by association, resemblance, or convention;"

(ii) "for" means "used to indicate the aim, or purpose of an action or activity;"

(iii) "tentatively" means "non-finally, provisionally;" and

(iv) "identifying" means "to recognizing as being; establishing the identity of someone or something."

Highmark argues that 52(c) covers only the disclosed diagnostic smart system and not the utilization review smart system. Allcare argues that 52(c) covers either of those embodiments alternatively. Element 52(c) differs from element 1(d) in two ways. 52(c) is a method step not governed by the unique construction rules of § 112-6, and it does not include the recitation that the tentative identification of a proposed mode of treatment is "responsive" to input of symptom data.[7]

---

[7] Although 52(c) includes within the method step, a structure ("input means") that is subject to § 112-6, the

What disclosed embodiments the claim element covers is not a proper part of claim construction except for claim elements that are governed by § 112-6. To decide that 52(c) covers only a system using the diagnostic smart system embodiment, as Highmark proposes, would improperly read a limitation from the specification into the claim. To decide that 52(c) also covers the disclosed utilization review smart system, as Allcare proposes, would involve a hypothetical infringement analysis not properly part of claim construction. The infringement issue will be whether the *accused* method is covered by element 52(c), not whether the disclosed utilization review smart system is covered. That is an infringement issue for the trier of fact, not a claim construction issue.

F. Element 52(d)

"preventing payment therefor by said payment means until said utilization review has been obtained and data indicative thereof has been entered in said system."

The words used in element 52(d) are identical to those used in reciting the third function in 1(d). Therefore, they will be given the same construction.

VIII. CLAIM 53

Claim 53 is a "dependent" claim, depending from "independent" Claim 52. Thus, Claim 53 incorporates by reference all of the limitations of Claim 52 as if they were expressly recited in Claim 53 ("a method of managing a health care

---

remainder of the limitations of 52(c) define a method step not subject to § 112-6 construction. Neither party contends otherwise.

management system according to Claim 52 in which").

The parties have stipulated that:

> In addition to including all of the limitations claim 52, the added limitation of claim 53 is that the "step of 'tentatively identifying a proposed mode of treatment,' further includes the steps of:
>
> (i) examining or verifying said proposed mode of treatment; and
>
> (ii) when said proposed mode of treatment includes an ancillary service, producing an indication thereof and providing said ancillary service," where the term *"an ancillary service"* means "one of the totality of supporting services that are needed to support total health. Such services include those of pharmacists, prosthesis providers, dentists, optometrists, audiologists and other medical specialists, laboratories and the like."

However, the parties disagree as to the meaning of "*providing*" in the context of claim 53.

The parties also disagree on the construction of the claim term "*providing said ancillary service.*" JCC40/A501.

Highmark proposes that "providing" means "to furnish, supply" and "providing said ancillary service" means "the ancillary service is furnished or provided by the system."

The drawings depict the use of ancillary services in Fig. 10, and the specification describes such use primarily at '105 Patent, 14:24-38. The system identifies the need for ancillary services and

"communicates the need" for ancillary services "to the indicated ancillary service, examples of which are Specialists 221, Dentists 222, Pharmacists 223 for medications, Suppliers of Prosthesis," etc. *Id.* 14:28-38. For example, if the patient wishes prescribed drugs to be "ordered automatically" by the system, the system "transmits the order" to an approved "ancillary provider." *Id.* 12:44-57. The specification does not indicate that the system itself performs or delivers the ancillary service. If the system itself were to perform or deliver the ancillary service, why would it transmit an order to an ancillary "provider" or communicate the need to the "ancillary service"?

The disclosure does not support the narrow definition of "providing" proposed by Highmark. The specification shows that a more appropriate definition of "providing" is "giving or arranging for." *See also Cambridge International Dictionary of English* (2001).

> Allcare proposes that "providing said ancillary services" means:
>
> "giving, facilitating or arranging for the ancillary services, including by (a) an automated system, medical director or other suitable person facilitating an ancillary service by indicating that payment will be made for a particular ancillary service as an approved treatment protocol or as part of an approved treatment protocol, such that the service is available and affordable; or (b) a provider electronically communicating a request for an ancillary service (such as a referral to a medical specialist) using

the computer system, such that the service is readied or prepared."

The explanation following "including" in Allcare's proposal is unduly lengthy and includes details not required by the specification.

Thus, it is recommended that "providing" in Claim 53 means "giving or arranging for."

IX. CLAIM 102

A. Preamble

"A method of managing an integrated health care management system having input means, payment means and memory storage, comprising:"

Stipulations

The parties have stipulated that:

i) Claim 102 pertains to "directing or administering an integrated health care management system and is a claim limitation," JCC42/A503;

ii) "managing" and "comprising" have the same meaning as in Claim 1 and/or Claim 52; *Id.*

iii) the terms "input means" and "payment means" are limitations of the claim and are governed by 35 U.S.C. § 112, ¶ 6. They have the same meaning as in Claims 1 and 52, JCC43/A504; and

iv) the term "memory storage" means "the facilities of a computer or computer system that store and permit retrieval of data, including internal and external storage devices, such as hard disks, floppy disks, tape drives, and memories (RAM/ROM)." JCC43/A504.

"Memory Storage"

The stipulated definition of "memory storage" adds the technical terms "hard disks, floppy disks, tape drives and memories (RAM/ROM)" which would seem to be at least as difficult for the average juror to understand as the claim term "memory storage" itself It is recommended that the parties try to agree on a simpler definition, such as ending the definition after "external storage devices." In the absence of such agreement, it is recommended that the Court simplify the definition as I have suggested.

"Integrated Health Care Management System"

The parties disagree as to the meaning of "integrated health care management system." Highmark proposes the same definition it proposed for "comprehensive health care management system" in the preamble of Claim 1, but substituting "unified" for the first occurrence of "comprehensive." Allcare proposes the following:

> a harmonious computer system for directing or administering health care which integrates (*i.e.*, puts various components together to form a harmonious computer system that includes) physicians, medical care facilities, patients, insurance companies and/or other health care payers, employers and banks and/or other financial institutions."

Allcare's proposed construction converts the claim to "a . . . computer system" based on a dictionary definition of "integrated" as a harmonious computer system in which various computer components are put together. Webster's New World Computer Dictionary (1988). The preamble of Claim 102 specifies that it is the health care management

system that is integrated. The specification describes the health care management system as integrating physicians, medical care facilities, patients, insurance companies, etc., and integrating important elements of total health care, such as preventative health measures, and changing of lifestyles. 1:8-11; 1:36-44. The definition proposed by Allcare is from a computer dictionary and apparently defines an integrated computer system not an integrated health care management system. The latter includes many elements other than computer components. Thus, the claim is to a method of managing a health care management system, not merely to a computer system. Allcare's proposed construction is not consistent with the intrinsic record.

For the reasons discussed above in construing the preamble of Claim 1, emphasis here should be given to the integration of the elements of the system, rather than to the comprehensiveness of the system.

Thus, it is recommended that "integrated health care management system" in the preamble of Claim 102 be construed to mean:

> "A unified health care management system that includes the integrated interconnection and interaction of the patient, health care provider, bank or other financial institution, insurance company, utilization reviewer/case manager and employer so as to include within a single system each of the essential elements to provide patients with complete health care, especially by trained and licensed professionals and payment therefor."

B. **Element 102(a)**

"storing through said input means into said memory storage personal health profile data for each of a predetermined plurality of persons."

Stipulations

The parties have stipulated that:

i) Element 102(a) is to be construed as "the step of transmitting or depositing health profile data through the physician's office terminal into the computer system's memory and making such information available for retrieval; JCC44/A505

ii) personal health profile data for each of a predetermined person is stored in a computer storage facility that is logically or physically connected with the system; JCC44/A505 and

iii) "input means" has the same meaning as in Claim 1 and Claim 52.

"Health Profile Data"

Allcare proposes that "health profile data" means "items of information found in a health profile, such as a person's health history or physical exam results." APH4. Highmark proposes, "information such as health history or physical examination results." HPH19.

The specification discloses entry and storing of a patient's health history and physical examination, as part of an "initial health screening." '105 Patent, 8:15-21, box 72, 73 and 74, Fig. 4. Both parties' proposals are consistent with that disclosure.

It is recommended that "health profile data" means "information such as health history or physical examination results."

"Each of a Predetermined Plurality of Persons"

The claim phrase "each of a predetermined plurality of persons" has the same meaning as in Claim 1(a) and Claim 52(a), i.e., "every one of a group of two or more persons, individually, the group being determined in advance."

Highmark contends that a physician would enter through his or her terminal only information about patients who visit his or her office, and that is not a "predetermined" group as claimed. Hrg. Trans. 74-82. Thus, although Highmark agrees that "each" means "every one," it contends that such construction causes the claim to not read on any disclosed embodiment.

Allcare also contends that if each means "every one," Claim 102 would not read on any disclosed embodiment. Allcare cites *Vitronics* for the proposition that a claim construction that excludes a preferred embodiment is "rarely if ever correct." 90 F.3d at 1583.

Allcare claims this should be corrected by giving "each" a special meaning of "one." Allcare contends that through the illustration of box 70 in Fig. 4 and the accompanying description at 8:3-5, the applicant acted as his own lexicographer and specially defined "each," to mean "one." Hrg. Trans. 231-37. The specification at 8:3-5 specifies that information for "each" participant is entered into the System as illustrated by rectangle 70, which uses the singular "entry of *participant* into system." Allcare contends

that the applicant therefore used "each" to mean "one."

As in claim elements 1(a) and 1(d), here in elements 102(a) and 102(e), the applicant again showed that he recognized the difference between "each" and "one." That is strong evidence that applicant did not intend to specially define "each" to mean "one." The use of the singular "participant" in box 70 apparently reflects that the participants are entered individually, one at a time.

Element 102(a) requires that the data be entered through the "input means" but does not specify whether it is entered through a single physician's office terminal or more than one, or all, of the physician's office terminals. For example, if it is a requirement of the system that all of the participants, or some predetermined subset of all the participants, e.g., those at one company, or those who are diabetic, have an initial screening (box 72), every one of that "predetermined" group would visit their respective physicians, everyone would have an initial health screening, and the physicians collectively through the "input means" at their respective offices would enter the personal health profile data for every member of the predetermined group.

The specification is very brief in its description of the step illustrated in box 70, and does not specifically describe the embodiment discussed above. However, that embodiment is not inconsistent with the specification.

The vague and inconclusive disclosure of box 70 and the specification at 8:3-5 do not overcome the clear distinction drawn by the applicant between "each" and "one", and the clear difference in their

common and ordinary meaning. Thus, the intrinsic evidence does not support Allcare's contention that the applicant acted as his own lexicographer and specially defined "each" to mean "one."

An ambiguous claim can be construed to preserve its validity; but only where the proposed claim construction is based on sound claim construction principles, and does not revise or ignore the explicit language of the claims. *Phillips*, 415 F.3d at 1327, citing *Liebel-Flarsheim Co. v. Medrad, Inc.*, 358 F.3d 898 (Fed. Cir. 2004). To construe "each" to mean "one" would ignore the explicit language of the claims, and would be improper.

Use

Element 102(a) claims the input and storage of the specified data. It does not recite the use of that data. Thus, this element 102(a) is not limited to any particular use of the stored data.

C. **Element 102(b)**

> "storing into said memory storage symptoms and treatment data for each of a predetermined plurality of health profiles and problems;"

Stipulations

The parties have stipulated that:

i) Element 102(b) is to be construed as "the step of transmitting or depositing symptoms and treatment information into the computer's memory and making such information available for retrieval;" JCC45/A506

ii) "storing" means "transmitting or depositing information into a computer's memory and

making such information available for retrieval;" *id.*

iii) "memory storage" has the same meaning as in element 102(a); and

iv) "symptom" and "treatment" have the same meaning as in element 1(d).

"Each of a Predetermined Plurality"

This term was construed as a modifier of "persons" in construing element 1(a). The same construction should apply here.

Health Profiles and Problems

Allcare proposes that "health profiles" means "summaries of health, such as a plurality of health histories or physical examination results." APH4. Highmark proposes that "health profiles and problems" means "health histories or physical examination results, and medical problems." HPH20.

Looking at the claim language itself, the term "health" appears to modify both "profiles" and "problems." Nothing in the intrinsic record is inconsistent with that, and the specification is concerned with health care.

Thus, it is recommended that "health profiles and problems" in element 102(b) means, "health related summaries, such as health histories or physical examination results and health problems."

Diagnostic Smart System

Highmark contends that element 102(b) describes a process for setting up the diagnostic smart system as discussed above with respect to element 1(d). Certainly, the specification describes the diagnostic

smart system as the use for the data claimed to be stored in element 102(b). See discussion of element 1(d) above. However, this element 102(b) claims the input and storage of the specified data. It does not claim the use of that data. Thus, element 102(b) is not limited to using the data for the diagnostic smart system or to setting up a diagnostic smart system. To limit this claim element to setting up for use in the diagnostic smart system would improperly read an unclaimed element from the specification into the claim. *CollegeNet*, 418 F.3d at 1231.

It is only limited to storing the claimed data for an unclaimed use. Even though only one use is disclosed, the claim must not be construed as limited to that single embodiment. *Phillips*, 415 F.3d at 1323.

D. Element 102(c)

> "storing in said memory storage criteria for identifying treatments requiring utilization review."

All terms of this element have been previously construed, and should be given the same construction in this element, or their construction is agreed to by the parties.

F. Element 102(d)

"storing in said memory storage criteria for identifying treatments requiring second opinions;"

All terms of this element have been previously construed, and should be given the same construction in this element, or their construction is agreed to by the parties.

G. Element 102(e)

> "entering into said system information identifying a proposed medical treatment for one of said plurality of persons;"

"(I)dentifying" was construed in relation to element 1(a) and has the same meaning here.

"Proposed Medical Treatment"

The parties disagree as to the meaning of the phrase "proposed medical treatment." JCC52/A513.

Highmark proposes that "proposed medical treatment" be construed as "a proposed medical treatment for disease." HPH23. Allcare proposes that the phrase means "a suggested remedy or therapy to a patient for a disease or injury." JCC52/A513.

"(P)roposed *mode* of treatment" was construed in relation to elements 1(d) as "a suggested method of the management and care of a patient to combat disease or injury." The issue is the effect of "medical" being substituted for "mode" here.

The intrinsic record uses the term "medical" many times but does not provide any assistance in defining it. Dorland's Illustrated Medical Dictionary 28th Ed. (1982) (A513) distinguishes "medical as distinct from surgical treatment." Although terms such as "medical treatment systems" (1:7-8); and "recommended medical procedures" (1:65) are used in the specification, and may be intended to include both surgical and non-surgical, neither the word surgical nor non-surgical is used in the patent. In stipulating that "procedures" include "both medical and surgical procedures" (see construction of element 1(b) above) the parties recognized this distinction. I

therefore recommend that "medical treatment" be construed to distinguish medical treatment from surgical treatment.

Thus, I recommend that the phrase "proposed medical treatment" be construed to mean:

> "a suggested non-surgical method of the management and care of a patient
>
> to combat disease or injury."

G. **Elements 102(f) and (2)**

The construction of all terms of these elements are agreed to by the parties, or they have been previously construed, and should be given the same construction in this element.

Dated: December 19, 2006

/s/ Don W. Martens
Don W. Martens
Special Master

IN THE UNITED STATES DISTRICT COURT
FOR THE NORTHERN DISTRICT OF TEXAS
FORT WORTH DIVISION
CIVIL ACTION NO. 4:03-CV1384-Y

HIGHMARK, INC.

Plaintiff,

v.

ALLCARE HEALTH
MANAGEMENT SYSTEMS, INC.

Defendant.

ORDER ADOPTING FINDINGS AND RECOMMENDATIONS OF SPECIAL MASTER

Defendant and counter-claimant Allcare Health Management System, Incorporated ("Allcare"), filed an amended motion for claim construction requesting the Court construe Claims 1, 52, 53, and 102 of United States Patent No. 5,301,105 (doc. #287). After review of the amended motion, the responses and replies, and the supporting appendices, the Court concluded that the complexity of the issues presented in Allcare's amended motion could not be "addressed effectively and timely by the Court." See Notice Regarding Appointment of a Special Master (doc. #353). Accordingly, the Court notified the parties of its intent to appoint a special master and granted the parties an opportunity to either agree on a special master or submit nominations.

On August 2, 2006, the parties notified the Court that they agreed to the appointment of Don W.

Martens and the Court subsequently appointed him on August 16. Thereafter, Martens held a *Markman* hearing on November 8 and filed his report and recommendations on December 20.

Under Federal Rule of Civil Procedure 53(g)(2), Allcare filed certain objections to Martens's recommendations. The Court has reviewed Martens's report and recommendations, Allcare's objections and appendix, Highmark, Incorporated's ("Highmark"), response and supporting appendix, and Allcare's reply.[1] After review, the Court OVERRULES Allcare's objections for the reasons stated in Martens's report and recommendations as well as for the reasons stated in Highmark's response, and the Court ADOPTS, in whole, Martens's recommendations.[2] FED. R. CIV. P. 53(g)(1).

---

[1] The Court conducted a *de novo* review of Allcare's objections under Rule 53(g)(3), (4).

[2] In its reply, Allcare indicates that some of the terms in Claim 1 construed by Martens do not relate to its allegations of infringement of Claims 52, 53, and 102 of U.S. Patent No. 5,301,105. Nevertheless, the parties did request those terms in Claim 1 be construed and to the extent those terms are relevant or necessary to the determinations of patent validity and infringement in this case, the Court ADOPTS Martens's recommended construction.

SIGNED March 23, 2007.

/s/ Terry R. Means
TERRY R. MEANS
UNITED STATES DISTRICT JUDGE

IN THE UNITED STATES DISTRICT COURT
FOR THE NORTHERN DISTRICT OF TEXAS
FORT WORTH DIVISION
CIVIL ACTION NO. 4:03-CV1384-Y

HIGHMARK, INC.

Plaintiff,

v.

ALLCARE HEALTH
MANAGEMENT SYSTEMS, INC.

Defendant.

ORDER GRANTING JOINT MOTION TO APPOINT SPECIAL MASTER

After review of the parties' joint motion (doc. #456) to reappoint Don W. Martens as special master, the Court GRANTS the motion.

Accordingly, Don W. Martens is hereby appointed as SPECIAL MASTER in this case to make a recommendation and report on the following motions filed by the parties which are hereby REFERRED to Martens:

1. Allcare's Motion for Partial Summary Judgment;
2. Highmark's Motion for Summary Judgment;
3. Allcare's Motion to Exclude the Expert Testimony of Jeremy Nobel, M.D.;
4. Highmark's Motion to Exclude the Testimony and Report of Stephen K. Holland, M.D.;

5. Highmark's Combined Motion And Memorandum To Exclude Expert Opinion And Report Of Robert A. Sherwin Regarding Reasonable Royalty Calculation; and
6. Allcare's Motion To Exclude Expert Testimony Of Mark M. Gleason Regarding Reasonable Royalty Calculation.

Martens shall proceed with all reasonable diligence in reviewing such motions and, no later than **April 13, 2008**, file with the Court **either** a report and recommendation on the above motions or a status update regarding such motions' review.

Martens shall have the discretion to hold a hearing should he choose to do so.

Martens may not engage in any *ex parte* communications with the Court or either party until the Court has entered an order adopting, affirming, modifying, or reversing Martens' report and recommendation pursuant to Federal Rule of Civil Procedure 53(g).[1]

Martens shall maintain a record of any and all materials and evidence considered by him. Martens must file such record with the Court at the same time he files his report and recommendation.

No later than **fourteen (14) days** after the date of this order's issuance Martens must confer jointly with the parties to arrange any steps Martens may deem appropriate to carry out his responsibilities as

---

[1] This qualification includes rulings on any Federal Rule of Civil Procedure 59(e) motion to reconsider the Court's adoption, affirmance, modification, or reversal of Martens' report and recommendation.

special master consistent with the terms of this order of appointment.

Pursuant to the parties' agreement, Martens's compensation pursuant to Federal Rule of Civil Procedure 53(h) shall be at the hourly rate agreed between the parties and Martens and shall be equally divided between them. Upon the completion of Martens's duties as special master, the parties shall jointly move for the fixing of Martens's compensation pursuant to Rule 53(h).

Finally, the parties shall **immediately** remit to Martens copies of all relevant filings (i.e. the motions, responses, replies, and appendices), unless the parties and Martens deem such copies unnecessary in their conference.[2]

SIGNED December 19, 2007.

/s/ Terry R. Means
TERRY R. MEANS
UNITED STATES DISTRICT JUDGE

---

[2] The parties may arrange, if they choose, to retrieve the "Judge's Copy" of the above-referred motions, briefs, and appendices and have those copies delivered to Martens. The parties should contact Ms. Judy Smalling, the Court's coordinator, to arrange for retrieving any of the pleadings.

IN THE UNITED STATES DISTRICT COURT
FOR THE NORTHERN DISTRICT OF TEXAS
FORT WORTH DIVISION
CIVIL NO. 4:03 CV1384-Y

HIGHMARK, INC.

Plaintiff,

v.

ALLCARE HEALTH
MANAGEMENT SYSTEMS, INC.

Defendant.

Judge Terry R. MEANS

CONFIDENTIAL APPENDIX IN SUPPORT OF HIGHMARK'S MOTION TO EXCLUDE EXPERT OPINION AND REPORT OF ROBERT A. SHERWIN REGARDING REASONABLE ROYALTY CALCULATION

Cynthia E. Kernick
Pa. ID No. 43912
Kevin S. Katona
PA ID No. 91651
REED SMITH LLP
435 Sixth Avenue
Pittsburgh, PA 15219
(412) 288-4176/3848

Eugene LeDonne
N.Y. ID No. 2923258
REED SMITH LLP
599 Lexington Avenue
29th Floor
New York, NY 10022
(212) 521-5402

and

Craig B. Florence
Texas State Bar No. 07158010
Robert Slovak
Texas State Bar No. 24013523
GARDERE WYNN
SEWELL L.L.P.
1601 Elm Street, Suite 3000
Dallas, TX 75201
(214) 999-3000

* * *

that a valid authorization exists, a claim that would otherwise be suspended is then placed back in line for payment

CONCLUSION

474. Based upon this analysis, it is my opinion that Highmark infringes Claims 52, 53 and 102 of the '105 Patent. In Exhibit D to my report, I present claim charts that I have prepared based upon the foregoing analysis in order to illustrate the nature of the patent infringement on an element-by-element basis.

475. At trial, I expect to testify to the opinions expressed in this report, as well as the underlying support outlined in this report. Between now and the time of trial, I understand that other experts will issue reports and possibly testify, and I may also be provided with additional materials I have yet to review. I reserve the right to review any new information provided to me in connection with this matter, and to supplement this report as I deem appropriate.

Dated: June 29, 2007

/s/ Stephen K. Holland
Stephen K. Holland, M.D.

EXHIBIT D – INFRINGEMENT CLAIM CHART

CLAIM LANGUAGE	KEY CLAIM CONSTRUCTION DEFINITIONS	COMPARISON TO HIGHMARK
52. A method of managing a comprehensive health care management system utilizing a	A method of managing a "***comprehensive health care management system***"	Highmark has a system. (¶¶ 22-132, 264-380). ("System" is not defined in the Special Master's claim construction order, so I have
	"***Comprehensive health care management system***" means "a system combining the patient, health care provider, bank or other financial institution, insurance company, utilization reviewer/case manager and employer so as to include within a single system each of the essential elements to provide patients	used a 1990-based standard definition of "system" propounded by IEEE Software Engineering Group in Standard 612.10 in the context of a computer system. The materials I have relied upon for this are attached as Exhibit E-G to my Report.).

CLAIM LANGUAGE	KEY CLAIM CONSTRUCTION DEFINITIONS	COMPARISON TO HIGHMARK
	with complete and comprehensive maintaining and restoration of	By October 2000, the system combined:
	health by the treatment and prevention of disease, especially by trained and licensed professionals and payment therefor" (Special Master Report ("Report") at 12)	– patients (¶¶ 264-291) show patients were combined into the system through the CHM consumer portal initiative)
		– providers (¶¶ 294-337) show providers were combined into the system through the CHM provider portal initiative)
		– bank (¶¶ 42,58-62, 71-72) show that Highmark began incorporating

CLAIM LANGUAGE	KEY CLAIM CONSTRUCTION DEFINITIONS	COMPARISON TO HIGHMARK
		banks into the system in 1996 for payment of claims by EFT)
		– insurance co. (Highmark is an insurance company, ¶¶ 11-22)
		– utilization reviewer (¶¶ 107-132 show MaxMC being used by utilization reviewers, namely, the HMS group within Highmark)
		– employer (¶¶ 274-286, shows employers combined into the CHM at least by 2000 when Release 2 of the consumer portal was

CLAIM LANGUAGE	KEY CLAIM CONSTRUCTION DEFINITIONS	COMPARISON TO HIGHMARK
		deployed)
		Highmark manages its system because it administers, directs, oversees and operates the system. Highmark likens itself to the "central nervous system of the health care delivery process; the nexus through which all of the participants connect." (¶ 21). In terms of health care delivery, the reason for creating the system is to give Highmark members a greater hand in their health, so that they can

CLAIM LANGUAGE	KEY CLAIM CONSTRUCTION DEFINITIONS	COMPARISON TO HIGHMARK
		manage both
		benefits and wellness. Highmark believes that the consumer portal positively impacts the health of the membership while reducing the burden on employers. (¶¶ 266-273, 280, 291, 292) Highmark's commitment to managing health as part of a concerted effort with its providers is also evident in its use of the data warehouse (¶¶ 79-98) Likewise, the provider portal was designed to offer a single comprehensive

CLAIM LANGUAGE	KEY CLAIM CONSTRUCTION DEFINITIONS	COMPARISON TO HIGHMARK
		and integrated
		system that would provider greater efficiency for providers, to the benefit of Highmark's members. ((¶¶294-299)
		Further post-2000 system initiatives such as Health eConnect and Lifestyle Returns, demonstrate Highmark's commitment to creating a system to focus on health care management, including disease prevention through wellness and condition management,

CLAIM LANGUAGE	KEY CLAIM CONSTRUCTION DEFINITIONS	COMPARISON TO HIGHMARK
		not merely health care payments. (¶¶ 339-357) (Highmark is on record in this case as stating that its system is focused on claims adjudication and payment. (for instance, ¶ 24 of the report)
data processor,	A "**data processor**," "**Data processor**" means "a device or system capable of performing operations upon data to achieve a desired goal. A data processor may be a central processing unit (CPU) or one or more computers such as personal	Highmark has a "data processor" in the form of computers such as personal computers, mainframe computer, central processing system, microprocessors, or the like. (Examples confirming this are found at

CLAIM LANGUAGE	KEY CLAIM CONSTRUCTION DEFINITIONS	COMPARISON TO HIGHMARK
	computers, mainframe computer, central processing system, microprocessors, or the like" (Report 37-38)	¶¶ 25, 35, 41, 46 49, 104, 110, 286, 293, 313, 315, 316, 322, 325, 326)
data bank memories,	"**data bank memories**," "**Data bank memory**" is "a database" (Report at 19)	There are databases in the Highmark system. My basis for this statement includes at least the following:
		– ECS (¶¶ 26-35) – ICIS (¶¶36-41) – Providers (¶¶ 42-46) – OSCAR (¶¶ 52-67) – COMP IV (¶¶ 68-78) – Data warehouse (79-98) – ROAR(¶¶ 99-106)

CLAIM LANGUAGE	KEY CLAIM CONSTRUCTION DEFINITIONS	COMPARISON TO HIGHMARK
		MaxMC (¶¶ 107-132)
input means	"**input means**" "**Input means**" is a physician office terminal (Report at 12) "A physician's office terminal, including a visual display, and a keyboard or card reader for entry of data and connected, directly or indirectly, to a remote central computer for some or all of the processing of the entered data." (Report at 19)	Highmark professional and facility providers use personal computers including monitors and keyboards (¶¶ 358, 361-364) in connection with Navinet. The transactions that are performed using Navinet involve remote processing of data for at least some of the entered data. This could include patient search,

CLAIM LANGUAGE	KEY CLAIM CONSTRUCTION DEFINITIONS	COMPARISON TO HIGHMARK
		diagnosis search, procedure search, authorization submission, or inquiry. (¶¶ 315, 326, 366-369, 372, 374. 425, 432-447)
and payment means comprising:	and "**payment means**" "**Payment means**" means "a computer capable of performing electronic funds transfer" (Report at 26) **comprising:** "**Comprising**" means "including" and is an open-ended transitional phrase according to well-established patent doctrine. (Report at 11)	Highmark uses a computer capable of performing electronic funds transfer. (¶¶ 42, 58-62, 71-72 show that Highmark began incorporating banks into the system in 1996 for payment of claims by EFT)

CLAIM LANGUAGE	KEY CLAIM CONSTRUCTION DEFINITIONS	COMPARISON TO HIGHMARK
(a) entering into said data processor data identifying each of a predetermined plurality of persons;	**"Entering"** means "the act or process of inputting information" (Report at 38)" **"Data processor"**– See above. **"Data identifying each of a predetermined plurality of persons"** means "factual information, such as an identification number, establishing or representing the identity of each of a predetermined plurality of persons" (Report at 13) **"Each,"** in the context of the	When ECS was created, data identifying all plan members was loaded into the ECS system (¶ 375) Information from ECS is loaded into ROAR, OSCAR, Comp IV, and MaxMC. (¶ 376) Highmark has loaded data identifying all employers in ICIS (¶ 377) Highmark has loaded data identifying all of its providers. (¶ 378) Highmark has

CLAIM LANGUAGE	KEY CLAIM CONSTRUCTION DEFINITIONS	COMPARISON TO HIGHMARK
	intrinsic record, means "every one, individually" Report at 15). "**Predetermined plurality of persons**" means "a group of two or more persons determined in advance" (Report at 13)	loaded data identifying all of its providers who are signed up to receive payment by EFT, along with vital account information. (¶ 378)
(b) entering into one of said data bank memories an identification of predetermined procedures requiring utilization review;	"**Entering**" – See above. "**Data bank memories**" – See above. "**Identify**" is "to recognize as being; establish the identity of someone or something" (Report at 13, 28) **predetermined**	Highmark has entered into the ROAR database a list of procedures requiring authorization (¶ 404, 425) Authorization is a medical necessity review process, which meets the definition of utilization review adopted

CLAIM LANGUAGE	KEY CLAIM CONSTRUCTION DEFINITIONS	COMPARISON TO HIGHMARK
	procedures requiring utilization review" is to be construed as "preselected procedures requiring utilization review" (Report at 19) **"Utilization review"** means "review of the medical necessity or the efficiency or the quality of health care services, either prospectively, concurrently, or retrospectively" (Report at 23)	in this case. (¶¶ 111-128, 381-403, 426, 434) Highmark has entered into the MaxMC database a list of procedures that require review because of efficiency and/or quality of care considerations, such as experimental/investigational, procedures of questionable usefulness, possible cosmetic, no proven value, or possible benefit exclusion. (¶¶ 405, 440)
(c) entering through said	**"Data symbolic of patient symptoms**	*"entering through said*

CLAIM LANGUAGE	KEY CLAIM CONSTRUCTION DEFINITIONS	COMPARISON TO HIGHMARK
input means into said data processor data symbolic of patient symptoms for tentatively identifying a proposed mode of treatment and, when said proposed mode of treatment includes one of said predetermined procedures requiring utilization review, producing indicia indicative thereof; and	**for tentatively identifying a proposed mode of treatment"** means "information expressed in a symbolic or representative manner pertaining to a noticeable change in a patient's condition indicative of some bodily or mental disease, disorder or other medical condition for tentatively identifying a suggested method of the management and care of a patient to combat disease or injury; where: (i) 'symbolic' means 'of or pertaining to, or expressed by means of a symbol	*input means into said data processor"* Entry of ICD-9 codes in connection with referral-authorization submission is performed using a PC at the provider location that acts as a remote terminal (¶¶ 358-374, 409-424) "*data symbolic of patient symptoms*" ICD-9 codes are data symbolic of patient symptoms because they constitute information

CLAIM LANGUAGE	KEY CLAIM CONSTRUCTION DEFINITIONS	COMPARISON TO HIGHMARK
	or symbols, i.e., something that represents something that else by association, resemblance, or convention;" (ii) 'for' means 'used to indicate the aim, or purpose of an action or activity;' (iii) 'tentatively' means 'non-finally, provisionally,' and (iv) 'identifying' means 'to recognizing as being; establishing the identity of someone or something.'" (Report at 40) **"When said proposed mode of**	expressed in a symbolic or representative manner pertaining to a noticeable change in a patient's condition indicative of some bodily or mental disease, disorder or other medical condition. (¶¶ 409-424 and Exhibit C) Additionally, in some cases, Highmark needs to know the symptoms associated with the request regardless of whether they appear in the box for diagnosis codes. The authorization

CLAIM LANGUAGE	KEY CLAIM CONSTRUCTION DEFINITIONS	COMPARISON TO HIGHMARK
	treatment includes one of said predetermined procedures requiring utilization review, producing indicia indicative thereof" means "when one or more ways of medically or surgically treating a patient that is put forward for consideration, discussion or adoption includes a pre-selected treatment that requires utilization review, as properly construed, the system causes to exist a sign, indication or identifying mark indicating that utilization review is required for such proposed	request screen in question affords the opportunity to provide information such as "Patient is experiencing chest pain." (¶ 447) "*for tentatively identifying a proposed mode of treatment*" ICD9 codes being entered for the purpose of making a provisional treatment suggestion to Highmark for consideration of medical necessity. (The ref-auth submission form, when

CLAIM LANGUAGE	KEY CLAIM CONSTRUCTION DEFINITIONS	COMPARISON TO HIGHMARK
	treatment." (Report at 39)	completed, is submitted to Highmark and constitutes a suggested method of the management and care of a patient. (¶¶ 426-428). Entry of these codes are required in an authorization submission. (For example, ¶ 408) "*When said proposed mode of treatment includes one of said predetermined procedures requiring utilization review, producing indicative thereof*"

CLAIM LANGUAGE	KEY CLAIM CONSTRUCTION DEFINITIONS	COMPARISON TO HIGHMARK
		In Navinet, "pend" signifies that the authorization has not been provided yet, meaning that the provider is awaiting the conclusion of Highmark's medical necessity review process. (¶¶ 434-447). As discussed above, authorization is a medical necessity review process, which meets the definition of utilization review adopted in this case. (¶¶ 111-128, 381-403, 426, 434). In MaxMC,

CLAIM LANGUAGE	KEY CLAIM CONSTRUCTION DEFINITIONS	COMPARISON TO HIGHMARK
		Highmark clinical reviewers see a Red Widget Warning flag for procedures that require special attention due to the fact that Highmark has established medical policy under which they may be experimental/ investigational, procedures of questionable usefulness, possible cosmetic, no proven value or possible benefit exclusion. For these cases, the Red Widget Warning flag is an indication of the fat that the case is being

CLAIM LANGUAGE	KEY CLAIM CONSTRUCTION DEFINITIONS	COMPARISON TO HIGHMARK
		reviewed for the efficiency and/or quality of care and may be objectionable for this reason. (¶¶ 405, 440). If such a situation is encountered, and a reviewer cannot approve the authorization request, it must be referred to a physician advisor, as only a physician advisor in the Highmark HMS is permitted to deny an authorization request. (¶¶ 126, 385)
(d)	"Preventing	Highmark stops

CLAIM LANGUAGE	KEY CLAIM CONSTRUCTION DEFINITIONS	COMPARISON TO HIGHMARK
preventing payment therefore by said payment means until such utilization review has been obtained and data indicative thereof has been entered into said system.	**payment therefore by said payment means until said utilization review has been obtained and data indicative thereof has been entered in said system"** means "stopping payment by the payment means for the treatments identified by the system as requiring utilization review until said utilization review has been completed and an indication of such completion has been entered into the system' (Report at 36, 41)	payment by the payment means – RENO for OSCAR, CPS for COMP IV – for the treatments identified by the system as requiring medical necessity review until the review has been completed and an indication of such completion has been entered into the system in the form of a valid authorization. (¶¶ 47-78, and 448-473)
53. A method of managing a health care management system	**"Providing"** means "giving or arranging for" (Report at 42)	As to the elements of Claim 52, see the infringement

CLAIM LANGUAGE	KEY CLAIM CONSTRUCTION DEFINITIONS	COMPARISON TO HIGHMARK
according to claim 52 in which the step of tentatively identifying a proposed mode of treatment further includes checking said proposed mode of treatment and when said proposed mode of treatment includes an ancillary service, producing indicia indicative thereof and providing said ancillary service.	"**Ancillary service**" means "one of the totality of supporting services that are needed to support total health. Such services include those of pharmacists, prosthesis providers, dentists, optometrists, audiologists and other medical specialists, laboratories and the like" (Report at 41)	analysis above. A variety of ancillary services, such as imaging, physical and occupational therapy, require authorization at Highmark. (Kairys Depo., pp. 110-117; imaging prior auth manual, produced herewith) When a request for authorization is submitted electronically through Navinet and cannot be automatically approved, it is placed in MaxMC where the proposed treatment (i.e., the completed

CLAIM LANGUAGE	KEY CLAIM CONSTRUCTION DEFINITIONS	COMPARISON TO HIGHMARK
		and submitted auth request form, ¶¶ 426-428) is then checked by a care reviewer in HMS. (¶¶ 436-440) The details of the auth request, including the service category (such as PT/OT or radiology), which is an indication that an ancillary service is requested, are therefore indicated in the details of the case. (Video system inspection transcript, p. 15) If Highmark approves the authorization (¶ 424), then

CLAIM LANGUAGE	KEY CLAIM CONSTRUCTION DEFINITIONS	COMPARISON TO HIGHMARK
		Highmark is giving and arranging for the ancillary service to the patient. First, without the authorization approval, as a practical matter, the patient does not receive the benefit. Second, the authorization number provides security to the service provider because the services are deemed medically necessary, paving the way for the services to proceed.
102. A	A method of	The System is

CLAIM LANGUAGE	KEY CLAIM CONSTRUCTION DEFINITIONS	COMPARISON TO HIGHMARK
method of managing an integrated health care management system	managing an "**Integrated health care management system**" means "a unified health care management system that includes the integrated interconnection and interaction of the patient, health care provider, bank or other financial institution, insurance company, utilization reviewer/case manager and employer so as to include within a single system each of the essential elements to provide patients with complete health care, especially by trained and	addressed in the report and in the analysis of the infringement of the preamble of Claim 52. As Highmark's own documents indicate, the system was created through a unified strategy, the CHM strategy (¶¶ 264-332). The documents demonstrate repeatedly that the system in question is integrated. (For example, ¶¶ 25, 34, 36, 282, 284, 285, 298, 299, 301, 302, 314, 320, 324, 328, 341, 348, 360 reflect a high level of system

CLAIM LANGUAGE	KEY CLAIM CONSTRUCTION DEFINITIONS	COMPARISON TO HIGHMARK
	licensed professionals and payment therefor" (Report at 44)	integration in the Highmark system) Among other things, the foregoing references demonstrate that Highmark used a professional project and systems integrator to implement the CHM strategy, with shared technical resources as part of a "single effort." (¶ 299) Further, Highmark's own documents show that Highmark believed the system that the CHM strategy built the consumer and provider portals

CLAIM LANGUAGE	KEY CLAIM CONSTRUCTION DEFINITIONS	COMPARISON TO HIGHMARK
		on top of was already "integrated" (For example, see ¶ 24 of the report) The "interconnection and interaction of the patient, health care provider, bank or other financial institution insurance company, utilization reviewer/case manager and employer" is shown in the analysis of the preamble of infringement of Claim 52.
having input	**"Memory storage"**	This is shown in

CLAIM LANGUAGE	KEY CLAIM CONSTRUCTION DEFINITIONS	COMPARISON TO HIGHMARK
means, payment means and memory storage comprising:	means "the facilities of a computer or computer system that store and permit retrieval of data, including internet and external storage devices" (Report at 43)	the previous analysis of "input means," "payment means," and "data bank memories" for Claim 52. Memory storage is demonstrated in the existence of the data that is stored in the Highmark databases identified previously in connection with infringement of Claim 52.

CLAIM LANGUAGE	KEY CLAIM CONSTRUCTION DEFINITIONS	COMPARISON TO HIGHMARK
(a) storing through said input means into said memory storage personal health profile data for each of a predetermined plurality of persons;	**"Storing through said input means into said memory storage personal health profile data for each of a predetermined plurality of persons"** means "transmitting or depositing health profile data through the physician's office terminal into the computer system's memory and making such information available for retrieval" (Report at 45) **"Health profile data"** means "information such as health history or physical examination results" (Report at	There are a number of examples of the practice of this step in association with the Highmark system: - members can go online and sign up for MyBlue link or Lifestyle Returns, whereupon they fill out a personal wellness profile (¶¶ 88, 272, 351, 353). This profile is an example of a health profile. - in a normal physician practice or facility practice, providers who

CLAIM LANGUAGE	KEY CLAIM CONSTRUCTION DEFINITIONS	COMPARISON TO HIGHMARK
	45) "**Each of a predetermined plurality of persons**" means "every one of a group of two or more persons, individually, the group being determined in advance." (Report at 45)	use Navinet to submit claims (¶¶ 303, 306 show claim submission functionality in Navinet, for example) periodically will submit their claims for the group of patients that they have seen but not yet billed for. A claim form is an example of a health profile, and constitutes submission of "health profile data." - physicians using Navinet apparently can access the Smarty Registry, as it appear to have

CLAIM LANGUAGE	KEY CLAIM CONSTRUCTION DEFINITIONS	COMPARISON TO HIGHMARK
		been schedule for release in Q1 '04. (H56188-56193, 56571-56581, 56587-56592 – 56589 states it was pushed back to Q1 '04 from Q4 '03). Smart Registry is a report stored electronically consisting of health profile data for each person who is identified as at-risk through Highmark's data mining efforts. (¶¶ 90-97). - physicians also receive spreadsheet copies of the Smarty Registry to open

CLAIM LANGUAGE	KEY CLAIM CONSTRUCTION DEFINITIONS	COMPARISON TO HIGHMARK
		on their PCs (¶¶ 92-94)
(b) storing into said memory storage symptoms and treatment data for each of a predetermined plurality of health profiles and problems;	"**Storing into said memory storage symptoms and treatment data for each of a predetermined plurality of health profiles and problems**" means "transmitting or depositing symptoms and treatment information into the computer's memory and making such information available for retrieval" (Report at 47)	– Highmark deposits this kind of information into the Data Warehouse. (¶¶ 79-98). Claims deposited into the warehouse, for example, would certainly have symptoms and show treatments associated therewith. (¶ 457) All claim forms utilize ICD-9 codes, which include symptom codes. (¶¶ 409-424)
(c) storing in said memory storage criteria for	"**Storing**" means "transmitting or depositing information into a	Highmark has entered into the ROAR database a list of procedures

CLAIM LANGUAGE	KEY CLAIM CONSTRUCTION DEFINITIONS	COMPARISON TO HIGHMARK
identifying treatments requiring utilization review;	computer's memory and making such information available for retrieval" (Report at 47)	requiring authorization. (¶ 404) Authorization is a medical necessity review process. (¶¶ 111-128, 381-403, 426, 434) Highmark has entered into the MaxMC database a list of procedures requiring clinical review. (¶ 405) Provider Resource Center stores criteria for treatments requiring authorization, such as lists of procedures

CLAIM LANGUAGE	KEY CLAIM CONSTRUCTION DEFINITIONS	COMPARISON TO HIGHMARK
		requiring authorization, and provider office manuals explaining the criteria of when authorization is required. (¶ 335) MaxMC stores procedures the require efficiency and/or quality review. (¶¶ 405, 440) Highmark has entered into the ROAR database a list of procedures requiring authorization (¶ 404, 425) Authorization is a medical necessity review process, which

CLAIM LANGUAGE	KEY CLAIM CONSTRUCTION DEFINITIONS	COMPARISON TO HIGHMARK
		meets the definition of utilization review adopted in this case. (¶¶ 111-128, 381-403, 426, 434)
(d) storing in said memory storage criteria for identifying treatments requiring second opinions;		ICIS stores which groups require second opinions for surgeries. (¶ 39)
(e) entering into said system information identifying a proposed medical treatment for one of said plurality of persons;		Submitting an authorization request for a patient through Navinet. (¶¶ 426-428)

CLAIM LANGUAGE	KEY CLAIM CONSTRUCTION DEFINITIONS	COMPARISON TO HIGHMARK
(f) identifying whether or not said proposed medical treatment requires utilization review; and		Highmark providers consult criteria in the Provider Resource Center to determine whether treatment under consideration requires an authorization. (¶335) Highmark care managers consult MaxMC to locate incoming case (where the case comes in thru Navinet) and determine whether procedure code is flagged with a Red Widget Warning. (¶¶ 405, 440) Highmark has

CLAIM LANGUAGE	KEY CLAIM CONSTRUCTION DEFINITIONS	COMPARISON TO HIGHMARK
		entered into the ROAR database a list of procedures requiring authorization. The Highmark system checks to see which procedures are flagged for requiring authorization. (¶¶ 404, 425) Authorization is a medical necessity review process, which meets the definition of utilization review adopted in this case. (¶¶ 111-128, 381-403, 426, 434)

CLAIM LANGUAGE	KEY CLAIM CONSTRUCTION DEFINITIONS	COMPARISON TO HIGHMARK
(g) preventing said system from approving payment for said proposed medical treatment if said proposed medical treatment requires utilization review until such utilization review has been conducted.	"**Prevent**" means "to stop or keep from doing something; to keep from happening; to make impossible by prior action" (Report at 35)	*See* Analysis of infringement of Claim 52(d) above. (¶¶ 47-78, and 448-473).

IN THE UNITED STATES DISTRICT COURT
FOR THE NORTHERN DISTRICT OF TEXAS
FORT WORTH DIVISION
CIVIL NO. 4:03 CV-1384-Y

HIGHMARK, INC.

Plaintiff,

v.

ALLCARE HEALTH
MANAGEMENT SYSTEMS, INC.

Defendant.

Judge Terry R. MEANS

SPECIAL MASTER'S REPORT AND RECOMMENDED DECISIONS ON SUMMARY JUDGMENT MOTIONS AND MOTIONS TO EXCLUDE EXPERT OPINIONS AND REPORTS

CONFIDENTIAL PURSUANT TO PROTECTIVE ORDER

TABLE OF CONTENTS

page #s

I. INTRODUCTION 1

II. THE '105 PATENT 2

III. SUMMARY JUDGMENT MOTIONS 4

A. Law Applicable To Summary Judgment 4

B. Highmark's Non-Infringement Summary Judgment Motion 5

IV. LAW APPLICABLE TO INFRINGEMENT 5

1. The Accused System 6

2. Does The Accused System Contain Every Element Of The Asserted Claims? 9

3. Vicarious Liability 16

4. Conclusion 22

B. Highmark's Invalidity Summary Judgment Motion 22

1. Applicable Law 22

2. Level Of Ordinary Skill In The Art 23

3. Scope And Content Of The Prior Art 24

4. Claim 52 28

5. Claim 53 33

6. Conclusion 33

C. Allcare's Motion For Summary Judgment Of Enforceability 33

1. Introduction 33
2. The SSCI System 34
3. Bank One 35
4. Conclusion 38

V. MOTIONS TO EXCLUDE EXPERT REPORTS AND TESTIMONY 38
A. Applicable Law 38
B. Highmark's Motion To Exclude Sherwin Opinion and Report 39
1. Reliance On The Providence Agreement 40
2. The Time Of The Hypothetical Negotiation 41
3. Negotiation Under Threat Of Litigation 42
C. Allcare's Motion To Exclude Gleason Opinions And Report 43
1. Application Of *Georgia-Pacific* Factors 44
2. Assumption Of Validity, Enforcement And Infringement 44
3. Entire Market Value Rule 46
4. Licenses Under Threat Of Litigation 46
5. Tri Zetto 47
6. Early Adopter Discount 48
7. End-User Usage And EULA Fees 49
8. Conclusion 49

D. Highmark's Motion To Exclude Holland Report And Testimony 49

1. Holland's Reliance On ICD9 Codes 50

3. Reliance On "Health eConnect" And "Lifestyle Returns" 50

4. Conclusion 51

E. Allcare's Motion To Exclude Nobel Testimony 51

1. Nobel's Invalidity Opinion 51

2. Nobel's Non-Infringement Opinions 54

3. Conclusion 56

TABLE OF AUTHORITIES

page #s

Anderson v. Liberty Lobby, Inc.,
477 U.S. 242 (1986) 4

Athletic Alternatives, Inc. v. Prince Mfg., Inc.,
73 F.3d 1573 (Fed. Cir. 1996) 6

Avia Group Int'l, v. L.A. Gear Cal., Inc.,
853 F.2d 1557 (Fed. Cir. 1988) 5

BMC Resources Inc. v. Paymentech, L.P.,
498 F.3d 1373 (Fed. Cir. 2007) 16, 17

Chemical Eng'g Corp. v. Essef Indus., Inc.,
795 F.2d 1565 (Fed. Cir. 1986) 5

Conroy v. Reebok Int'l, Ltd.,
14 F.3d 1570 (Fed. Cir. 1994) 6, 25, 27, 37

Cybor Corp. v. FAS Techs., Inc.,
138 F.3d 1448 (Fed. Cir 1998) 5

Daubert v. Merrell Dow Pharmaceuticals, Inc.,
509 U.S. 579 (1993) 38, 47

DSU Medical Corp. v. JMS Co., Ltd.,
296 F. Supp. 2d 1140 (N.D. Cal. 2003) 39

Fonar Corp. v. General Electric Co.,
107 F.3d 1543 (Fed. Cir. 1997) 46

Fromson v. Western Litho Plate and Supply Co.,
853 F.2d 1568 (Fed. Cir. 1988) 42

General Elec. Co. v. Joiner,
522 U.S. 136 (1997) 39

Georgia-Pacific Corp. v. U S. Plywood Corp.,
318 F. Supp. 1116 (S. D. N.Y. 1970) 40

Graham v. John Deere Co. of Kansas City,
383 U.S. 1 (1966) 22

Hansen v. Alpine Valley Ski Area, Inc.,
718 F.2d 1075 (Fed. Cir. 1983) 40

Kingsdown Medical Consultants v. Hollister, Inc.,
863 F.2d 867 (Fed. Cir. 1988) 33

KSR Int'l Co. v. Teleflex, Inc.,
127 S. Ct. 1727 (2007) 22, 32

Kumbo Tire Co., Ltd. v. Carmichael,
526 U.S. 137 (1999) 38

Leapfrog Enters., Inc. v. Fisher-Price, Inc.,
485 F.3d 1157 (Fed. Cir. 2007) 22

Liquid Dynamics Corp. V. Vaughan Co.,
449 F.3d 1209 (Fed. Cir. 2006) 50

Mark I Marketing Corp. v. R.R. Donnelly & Sons Co.,
55 F.3d 285 (Fed. Cir. 1995) 5

Markman v. Westview Instruments, Inc.,
52 F.3d 967 (Fed. Cir. 1995), *aff'd*,
116 S. Ct. 1384 (1996) 5, 6

Maxwell v. Baker,
86 F.3d 1098 (Fed. Cir 1996) 42, 48

McKay v. United States,
199 F.3d 1376 (Fed. Cir. 1999) 5, 35

Metabolite Labs., Inc. v. Lab. Corp. of Am. Holdings,
370 F.3d 1354 (Fed. Cir. 2004) 22

Meyer v. Holley,
537 U.S. 280 (2003) 17

Micro Chemical v. Great Plains Chem.,
103 F.3d 1538 (Fed. Cir. 1997), *cert. denied*,
521 U.S. 1122 (1997) 33

Palumbo v. Don-Joy Co.,
762 F.2d 969 (Fed. Cir. 1985) 6

Read Corp. v. Portec, Inc.,
970 F.2d 816 (Fed. Cir. 1992) 5

Regents of Univ. Of California v. Eli Lilly & Co.,
119 F.3d 1559 (Fed. Cir. 1997), *cert. denied*,
523 U.S. 1089 (1998) 34

Renishaw v. Marposs Societa Per Azoni,
158 F.3d 1243 (Fed. Cir. 1998) 6

Rhine v. Cassio, Inc.,
183 F.3d 1342 (Fed. Cir. 1999) 6

Riles v. Shell Exploration & Production,
298 F.3d 1302 (Fed. Cir. 2002) 46

Sage Prods. Inc. v. Devon Indus. Inc.,
126 F.3d 1420 (Fed. Cir. 1997) 20

Sinclair Refining Co. v. Jenkins Petroleum Process Co.,
289 U.S. 689 (1933) 41

Studiengesellschaft Kohle, M.B.H. v. Dart Industries, Inc.,
862 F.2d 1564 (Fed. Cir. 1988) 42

The Barbed-Wire Patents,
143 U.S. 275 (1892) 25

Unisplay S.A. v. American Electronic Sign Co.,
69 F.3d 512 (Fed. Cir. 1995) 40

United States v. Williams,
95 F.3d 723 (8th Cir. 1996) 39

Wahpeton Canvas Co. v. Frontier Inc.,
870 F.2d 1546 (Fed. Cir. 1989) 6

Wolverine World Wide, Inc. v. Nike, Inc.,
38 F.3d 1192 (Fed. Cir. 1994) 6

OTHER AUTHORITIES

35 U.S.C. § 103 22
35 U.S.C. § 112 ..... 12, 52
35 U.S.C. § 271 16
35 U.S.C. § 282 22
Fed. R. Civ. P. 56 4
Fed. R. Civ. P. 702 44
Fed. R. Evid. 702 ..... passim
Fed. R. Evid. 801 ..... 27, 36, 37

I. INTRODUCTION

Plaintiff Highmark, Inc. ("Highmark") filed this action against Allcare Health Management Systems, Inc. ("Allcare") seeking declaratory judgment of invalidity, non-infringement and unenforceability of U.S. Patent No. 5,301,105 ("the '105 patent"). Allcare filed a counterclaim alleging infringement of the '105 patent.

I previously submitted a Special Master's Report and Recommended Decisions on Claim Construction, recommending construction of disputed terms of Claims 1, 52, 53, and 102 of the '105 patent. Cl. Constr. Rep., Dckt. No. 367. This Court adopted those recommendations. Dckt. No. 375.

Subsequently, the parties filed the following motions, which have referred to me as Special Master, for recommended decisions:

1. Highmark's Motion for Summary Judgment;

2. Allcare's Motion for Partial Summary Judgment;

3. Highmark's Motion to Exclude Expert Opinion and Report of Robert A. Sherwin Regarding Reasonable Royalty Calculation;

4. Allcare's Motion to Exclude Expert Testimony of Mark M. Gleason Regarding Reasonable Royalty Calculation;

5. Highmark's Motion to Exclude the Testimony and Report of Stephen D. Holland, M.D.; and

6. Allcare's Motion to Exclude the Expert Testimony of Jeremy Nobel, M.D.

Allcare does not allege infringement of Claim 1 and has withdrawn its allegation of infringement of

Claim 102. Highmark will not, in this litigation, pursue its allegation of invalidity of Claim 102. Highmark has not withdrawn its allegation of invalidity of Claim 1, but does not seek summary judgment of invalidity of Claim 1. Thus, I will not consider the validity, or infringement of Claims 1 and 102 in this Report.

The motions were fully briefed by the parties. A full day hearing was held on February 26, 2008. At the hearing, oral argument was presented by counsel for both parties.

I have reviewed and considered all of the arguments, evidence and submissions of the parties and provide the following report and recommended decisions.

II. THE '105 PATENT

The '105 patent was issued to Desmond D. Cummings on April 5, 1994. HA1.[1] The invention relates to a managed health care system that uses a computer system to interconnect and integrate interaction of the patient, health care provider, bank or other financial institution, insurance company, utilization reviewer, and employer so as to include within a single system each of the essential participants to provide patients with complete and comprehensive pretreatment, treatment and post-

---

[1] The appendices submitted by Highmark are cited as HA_____. The Allcare appendices are cited as APP_____. Separate appendices were submitted for each motion, except the appendices for the non-infringement and invalidity motions are combined. Unless otherwise stated, the citations are to the appendices to the motion being discussed.

treatment health care and payment for such health care. '105 patent, cover page, Abstract.[2]

Referring to Fig. 1 of the patent, a computer central processor 10 is the heart of the operational system. The central processor is connected to memory banks 16, 17, 18, 19, 20, 21 and 44 which store various information and data. *Id.* at 4:30-39. These memory banks may be a part of the processing system 10 or may be separate data banks that are accessible to the processing system. The central processor is connected to a plurality of remote physician office terminals, 11a-11c, each located in the office of a respective physician or other health care provider. The central processor also is connected to other participants in the system such as banks 27 and insurance companies 24a-24c. *Id.* at 5:49-6:2.

The central processor memory banks include information identifying each potential patient having the required insurance, or otherwise being authorized to use the system. *Id.* at 8:3-14. When a patient visits a physician or other health care provider, the patient's identification is entered into the system through that health care provider's remote office terminal 11a and is communicated to the central processing system for verification of the patient's authorization to participate in the health care system. *Id.* at 8:9-14; 8:57-9:12; boxes 100-102, Fig. 5. The central processor accesses appropriate insurance information such as a list of treatments

---

[2] Citations to the patent are to the cover page, or to column and line of the specification, or to a figure of drawing.

and authorized costs from an insurance file memory bank 18. *Id.* at 9:26-33; box 104, Fig. 5; 4:53-62.

The physician may use an optional diagnostic smart system to assist in making a diagnosis. To do so, the physician enters, through the physician's office terminal, patient symptoms and other data which will assist in making a diagnosis and identifying recommended treatment. *Id.* at 9:53-60; box 111, Fig. 5. The central physician's file 44 has stored in its memory identification of the most commonly encountered diseases and other ailments, together with the symptoms usually associated with them. *Id.* at 6:55-59. When the physician enters the observed symptoms and requests a diagnosis, the central processing system obtains the necessary data from the physician's file 44 and prepares a list of the most likely medical conditions corresponding to the observed symptoms, together with the generally approved or recommended treatment protocols. *Id.* at 6:59-67; box 112, Fig. 5. Thus, the physician is assisted by the processing system in identifying the most likely causes of the health problem, and the recommended treatment.

Having made the diagnosis, with or without the assistance of the diagnostic smart system, the health care provider then enters into the system data identifying the proposed treatment. *Id.* at 11:32-36; box 127, Fig. 6. The system memory banks include information identifying treatments and procedures for which utilization review is required. *Id.* at 4:53-62. The processing system compares the proposed treatment with recommended protocols stored in the insurance file 18 and physician file 44 and indicates whether the proposed treatment meets applicable

criteria of the insurer. *Id.* at 10:3-8; 11:37-40; box 128, Fig. 6. If the treatment requires utilization review or does not meet the applicable criteria, there ensues a discussion with a nurse and sometimes with the Medical Director. *Id.* at 11:44-55. If the treatment is approved, the health care provider proceeds with treatment. After treatment the health care provider enters into the system that the visit is completed. *Id.* at 13:24-30; box 159.

The system then makes provision for transfer of approved sums from the bank to the health care provider. *Id.* at 13:44-52.

Fig. 3 illustrates an alternative embodiment which functions similarly to that of Fig. 1 discussed above, but differs in that the physician file 44, and some other data files, may be located in the separate physician offices in a personal computer ("PC"), instead of at the central location with the central processor; and some of the data processing is done at the separate physician's offices in a microprocessor 60 which communicates with the central processor through a conventional modem 62. *Id.* at 7:39-60.

III. SUMMARY JUDGMENT MOTIONS

A. Law Applicable To Summary Judgment

Summary judgment is appropriate when the record shows no genuine issue of material fact, and an entitlement to judgment as a matter of law for the moving party. *See* Fed. R. Civ. P. 56(c). A material fact is one that is relevant and necessary to the proceedings. *See Anderson v. Liberty Lobby, Inc.*, 477 U.S. 242, 248 (1986). A genuine issue exists if sufficient evidence is presented so that a reasonable fact finder could decide the issue in the nonmoving party's favor. *Id.* However, an asserted issue of

material fact is not "genuine" in the sense of Fed. R. Civ. P. 56 if a reasonable jury could only resolve the question for the moving party. *See id.* at 248. The evidence proffered by the nonmoving party "is to be believed, and all justifiable inferences are to be drawn in [the nonmovant's] favor." *Id.* at 255. When ruling on a motion for summary judgment, the court must keep in mind the proof necessary to support liability or a defense under the applicable substantive law. *Id.* at 254.

The Federal Circuit has emphasized repeatedly that "summary judgment is as appropriate in a patent case as any other case." *See, e.g., Avia Group Int'l, v. L.A. Gear Cal., Inc.*, 853 F.2d 1557, 1561 (Fed. Cir. 1988); *Mark I Marketing Corp. v. R.R. Donnelly & Sons Co.*, 55 F.3d 285, 289 (Fed. Cir. 1995). Noninfringement is an issue on which it has "repeatedly upheld a grant of summary judgment." *Chemical Eng'g Corp. v. Essef Indus., Inc.*, 795 F.2d 1565, 1571 (Fed. Cir. 1986).

Finally, when both parties move for summary judgment, the court must evaluate each motion on its own merits, resolving all reasonable inferences against the party whose motion is under consideration. *McKay v. United States*, 199 F.3d 1376, 1380 (Fed. Cir. 1999).

B. Highmark's Non-Infringement Summary Judgment Motion

Highmark's Motion for Summary Judgment includes both a Motion for Summary Judgment of Non-Infringement and a Motion for Summary Judgment of Invalidity. I will discuss them separately.

IV. LAW APPLICABLE TO INFRINGEMENT

The determination of infringement is a two-step process. The first step is to determine the scope and meaning of the patent claims at issue as a matter of law. *Markman v. Westview Instruments, Inc.*, 52 F.3d 967, 976, 979 (Fed. Cir. 1995) (*en banc*), *aff'd*, 116 S. Ct. 1384 (1996); *Cybor Corp. v. FAS Techs., Inc.*, 138 F.3d 1448, 1454 (Fed. Cir 1998) (*en banc*). That has been done in the Claim Construction Report and this Court's Order adopting that report. Dckt. No. 367; Dckt. No. 375.

Second, the properly construed claims are compared to the accused product or process to determine whether all the limitations of the claims are present. *Cybor*, 138 F.3d at 1454 (*citing Read Corp. v. Portec, Inc.*, 970 F.2d 816, 821, (Fed. Cir. 1992)); *Markman v. Westview Instr., Inc.*, 52 F.3d 967, 976 (Fed. Cir. 1995) (en banc), aff'd, 116 S. Ct. 1384 (1996); *Renishaw v. Marposs Societa Per Azoni*, 158 F.3d 1243, 1247-1248 (Fed. Cir. 1998). The patent owner bears the burden of proving infringement by a preponderance of the evidence. *Conroy v. Reebok Int'l, Ltd.*, 14 F.3d 1570, 1573 (Fed. Cir. 1994). Where the parties do not dispute any relevant facts regarding the accused product, but disagree over possible claim interpretations, the question of infringement collapses into the question of claim construction, which is a matter of law suitable for summary judgment. *See Rhine v. Cassio, Inc.*, 183 F.3d 1342, 1345 (Fed. Cir. 1999); *Athletic Alternatives, Inc. v. Prince Mfg., Inc.*, 73 F.3d 1573, 1578 (Fed. Cir. 1996).

Allcare does not allege infringement under the doctrine of equivalents, only literal infringement.

Literal infringement of a method claim is found only where each limitation of an asserted patent claim is found literally in the accused process. *Palumbo v. Don-Joy Co.*, 762 F2d 969, 974 (Fed. Cir. 1985). Omission of a single claimed step from an accused process is sufficient to preclude a finding of literal infringement of that claim. *Wolverine World Wide, Inc. v. Nike, Inc.*, 38 F.3d 1192, 1199 (Fed. Cir. 1994) ("If an express claim limitation is absent from the accused product, there can be no literal infringement as a matter of law").

With respect to literal infringement, there is a generally applicable doctrine that "one who does not infringe an independent claim can not infringe a claim dependent on (and thus containing all the limitations of) that claim." *Wahpeton Canvas Co. v. Frontier Inc.*, 870 F.2d 1546, 1552 n. 9 (Fed. Cir. 1989).

1. **The Accused System**

On Highmark's Motion for Summary Judgment of Non-Infringement the Court must accept the admissible evidence proffered by Allcare, and draw all justifiable inferences in favor of Allcare. Therefore, I will cite primarily to the description of the Highmark accused system provided by Allcare's technical expert Dr. Holland in his Report. APP 677-774.

Highmark is a Blue Shield insurer. Holland Rep. at ¶ 13. It is not a "provider" of medical services. Highmark's integrated electronic claims adjudication and processing system includes components such as ECS, ICIS, VIPR, OSCAR, ROAR and MaxMC. *Id.* at ¶ 25.

ECS (Enrollment Communications System) stores member enrollment information. *Id.* at ¶ 26. It is used to verify enrollment and determine eligibility. *Id.* at ¶ 29.

ICIS (Integrated Customer Information System) maintains group information related to all of the participating employers and their health benefit plans. It is used to check benefits for members. *Id.* at ¶ 36 and 38.

VIPR (Provider Database) maintains electronic files relating the participating providers who are set up for payment by electronic funds. *Id.* at ¶ 42.

OSCAR (Optimum System for Claims Adjudicating and Reporting) is an electronic claims processing systems incorporated in the Highmark system. When a patient receives a service from their physician, the charge is entered either manually or electronically on a HCFA 1500 form or screen by the physician office staff, and submitted. An electronic claim is submitted using practice management software. The claim is placed in one of the processing systems and passes through a processing review automatically. *Id.* at ¶ 49-50. OSCAR adjudicates claims and automatically passes approved transactions without human intervention to a reimbursement component called RENO for payment. *Id.* at ¶ 58.

The Highmark system enables use of Navinet, a web-based portal which is integrated with the system. Highmark providers use Navinet to submit requests for referrals or authorization and eligibility and benefits inquiries. Navinet provides a web-based front end to Highmark's applications and databases for provider transactions including

coverage verification, claim submission, authorizations, and referrals. *Id.* at ¶ 294, 303 and 304. Navinet users at a provider's office use a personal computer running a web browser such as Internet Explorer to connect to Highmark's web-site, which links to NaviMedix, which operates NaviNet. *Id.* at ¶ 362. Navinet training and support are funded by Highmark at no charge to the provider. *Id.* at ¶ 359.

The Highmark utilization review system permits advance authorization of a proposed treatment. *Id.* at ¶ 383-385. After the treatment is administered and a claim for payment is submitted, Highmark's claims processing computer searches for any previously obtained pre-authorization. If none is found, payment is withheld until adjudication, including utilization review, has been completed. Id. at ¶ 63, citing affdvt. of Francavilla.

In the Highmark system, utilization review is the determination of the medical necessity of a procedure. *Id.* at ¶ 407. The Highmark system uses rules that include a consideration of procedure codes in order to determine whether to automatically approve the request without human intervention. *Id.* at ¶ 432 and 433. The ROAR (Referrals and Authorization Requests) application in the system includes a procedure code table. The table indicates those procedures for which authorization is required. *Id.* at ¶ 99, 105, and 106.

MaxMC is used by Highmark's Healthcare Management Services for utilization review, based on diagnosis and procedure codes. *Id.* at ¶ 112 and 113. CPT codes are used for procedure codes. *Id.* at

¶ 120. The system instructs the user to enter ICD9 codes as the diagnosis. *Id.* at ¶ 129-131.

Highmark maintains a "data warehouse" containing information compiled from processed claims. Highmark analyzes information in the data warehouse and develops reports regarding patient conditions for case management and condition management, including personal wellness profile data that members enter. Highmark uses predictive modeling to improve identification of at-risk individuals and more efficiently align patients with care management interventions. It warehouses the member wellness profile data. *Id.* at ¶ 79, 80, 82, 87 and 88.

Using the Highmark member portal, members can access a "Healthwise Knowledgebase." That is a comprehensive evidence-based resource of physician approved information for medical consumers, which supports decisions relating to treatment options. *Id.* at ¶ 270 and 271. Through that portal, members also can obtain a Personal Wellness Profile that identifies health risks, goals, and sources of information. *Id.* at ¶ 272.

In 2001 and 2002, Highmark augmented the consumer portal by adding a number of transactions supported by Navinet under a section of the portal called Health eConnect. It provides a conduit for messaging between doctors and their patients. *Id.* at ¶ 339 and 341.

At least since 2005, Highmark has offered "Lifestyle Returns" through its web-site. This supports members in improving and maintaining their health by developing and living a healthy lifestyle. *Id.* at ¶ 347 and 348.

2. Does The Accused System Contain Every Element Of The Asserted Claims?

Allcare alleges infringement of Claims 52 and 53 of the '105 patent. Both are method claims, and are reproduced in Attachment A hereto.

Highmark contends that the accused system does not contain every element of the asserted claims. Specifically, Highmark contends that the accused system:

a) does not contain the "health care management system" of the preambles of Claims 52 and 53; and

b) does not accept entry of "data symbolic of patient symptoms for tentatively identifying a proposed mode of treatment." Claim 52(c).

If either of those limitations is not present in the accused system, then the accused system does not literally infringe either Claim 52 or 53 and summary judgment of non-infringement would be appropriate.

a) "Health Care Management System"

The preamble of Claims 52 and 53 recites a "health care management system," and that is a limitation of the claims. Cl. Const. Rep. at 38, Dckt. No. 367, HA25 at 63. The Court's claim construction requires that the health care management system of Claims 52 and 53 "provide patients with . . . the treatment and prevention of disease, especially by trained and licensed professionals . . .". Cl. Const. Rep. at 12, 37. Highmark contends that its system does not provide such treatment and prevention of disease. Highmark Opening. Br. at 28.

The term "provide" was construed in the context of "providing ancillary services" in Claim 53, but was not expressly construed in the context of the preambles to Claims 52 or 53. The meaning of "providing" with respect to ancillary services in Claim 53, and with respect to treatment and prevention of disease in the preambles of Claims 52 and 53 should be the same, *i.e.*, "giving or arranging for." Cl. Const. Rep. at 42. The reasons given for that construction with respect to providing ancillary services in Claim 53 apply equally to providing treatment and prevention of disease in Claims 52 and 53.

The computer system is part of the claimed health care management system, but the computer system alone is not the claimed health care management system. The claimed health care management system "has many participants." It uses a computer system to combine the patient, the provider and other participants "so as to include in a single (health care management) system each of the essential elements." *Id.* at 1, 2 and 12. The term "elements" is used in its broad sense to include participants. *Id.* at 11.

The claim construction for the preambles recites that the treatment and prevention of disease is provided by professionals (the providers, e.g. physicians or hospitals). The computer system need not be a robotic doctor. It is the health care management system, not the computer system, that must "provide patients with. . . the treatment and prevention of disease." The physician is a participant in the health care management system. There is no genuine issue of fact that the physicians,

as participants in the health care management system, give and arrange for the treatment and prevention of disease.

Therefore, the "health care management system" limitation of the preambles of Claims 52 and 53 is satisfied by the accused system. Summary judgment of non-infringement based upon alleged lack in the accused system of the "health care management system" of the preambles would be inappropriate.

b) 52(c) "Data Symbolic of Patient Symptoms For Tentatively Identifying A Proposed Mode of Treatment"

Element (c) of Claim 52 provides in part:

> (c) entering through said input means into said data processor data symbolic of patient symptoms for tentatively identifying a proposed mode of treatment... '105 Patent at 21:31-34.

In their claim construction contentions, both parties agreed that this claim limitation covers a diagnostic smart system as disclosed in the '105 patent. In the disclosed diagnostic smart system, the physician enters the patient's symptoms, and the computer system identifies the most likely medical conditions corresponding to the entered symptoms together with the generally approved treatment. The quoted portion of 52(c) reads naturally and easily on such a diagnostic smart system. The physician enters data symbolic of patient symptoms and the computer system, through its diagnostic smart system, tentatively identifies a proposed mode of treatment for the entered symptoms.

The accused system does not include such a diagnostic smart system. It does include a utilization review system for advance authorization of a proposed treatment as described above. *Supra*, p. 8. In the Claim Construction Report, I refused the request of Allcare to find that element 52(c) covers the utilization review system disclosed in the patent, without the disclosed diagnostic smart system, because such a determination was not a proper part of a claim construction analysis. Cl. Constr. Rep. at 41.

The issue here is whether in the accused system, the provider enters data symbolic of patient symptoms for tentatively identifying a proposed method of treatment, as claimed.

The NaviNet provider web portal presents an authorization request form (APP 28901) on the physician's computer screen. The physician is instructed to enter an ICD9 diagnostic code and a CPT proposed procedure code on that form. The accused system then determines from its database whether or not the proposed procedure requires utilization review for "medical necessity" before being authorized.

Combining the relevant constructions from the Claim Construction Report shows that "data symbolic of symptoms" was construed as:

> "information expressed by means of a symbol or symbols or representative manner pertaining to a noticeable change in a patient's condition indicative of some bodily or mental disease, or other medical condition." Cl. Const. Rep. at 28-29.

Highmark contends that the Claim Construction Report concluded that ICD9 codes indicate a treatment, not symptoms and thus the entry of ICD9 codes in the accused system in the "diagnosis" box cannot satisfy the claim limitation of entering data symbolic of symptoms.

However, the discussion in the Claim Construction Report regarding ICD9 codes as indicating a treatment, not symptoms, referred to the specific *structure disclosed in the patent specification* for performing the first function of claim element 1(d). That analysis of disclosed structure was an analysis appropriate only to a claim limitation, such as 1(d), in the special "means plus function" format governed by 35 U.S.C. § 112, par. 6 ("112-6"). Such analysis is not relevant to element 52(c) which is not in 112-6 format. The Claim Construction Report specifically noted that "the analysis of the structure for performing that function in 1(d) is not applicable" to 52(c). *Id.* at 40. (emphasis added). The focus of a patent infringement analysis for a claim element not covered by section 112-6 is on the accused system, not on the structure of the preferred embodiment described in the patent.

Thus, whether or not the Highmark system uses ICD9 codes as data symbolic of symptoms was not resolved in the claim construction of 52(c), which only concluded that ICD9 codes were not used as symptom data in the preferred embodiment disclosed in the patent.

In the accused system, the Navinet web portal requests the provider to enter a ICD9 code as the "diagnosis," not as the symptom. However, Dr. Holland testified that ICD9 codes from Chapter 16 of

the ICD-9-CM Manual, when used in the accused system, are data symbolic of symptoms, as are some codes from other Chapters, and that ICD9 codes entered as "diagnosis" may represent both patient symptoms and diagnosis, e.g. "headache." Holland Rep. at ¶ 409-424. Drawing all reasonable inferences in Allcare's favor, Allcare raises a genuine issue of fact as to whether the ICD9 codes entered in the accused system sometimes are "data symbolic of patient symptoms."

However, 52(c) requires that the data symbolic of patient symptoms be entered "for tentatively identifying a proposed mode of treatment." The Highmark utilization review requires identification of the proposed treatment so it can be compared to the authorized list of treatments, and either approved or disapproved for reimbursement. Although, according to Dr. Holland, in the accused system ICD9 codes are sometimes entered as data symbolic of patient symptoms, the utilization review system does not use the ICD9 code to identify a proposed mode of treatment. It uses the ICD9 code to identify the diagnosis or the symptom. CPT code identifies the proposed treatment. *Id.* at ¶ 120, 310.

Dr. Holland admits that, in the Highmark system, utilization review is the determination of the medical necessity of a "procedure." *Id.* at ¶ 407. The Highmark system uses rules that include a consideration of "procedure codes" to determine whether to automatically approve the request without human intervention. *Id.* at ¶ 432 and 433.

The ROAR (Referrals and Authorization Requests) application includes a "procedure code" table. The

table indicates those "procedures" for which authorization is required. *Id.* at ¶ 99, 105, and 106.

MaxMC is used by Highmark's Healthcare Management Services (HMS) for utilization review, based on diagnosis and "procedure codes." *Id.* at ¶ 112 and 113. CPT codes are used for "procedure codes." *Id.* at ¶ 120. The system instructs the user to enter the ICD9 code as the diagnosis. *Id.* at ¶ 129-131. Navinet uses CPT codes as the "procedure codes" and ICD9 codes as the diagnosis codes. *Id.* at ¶ 310, 405.

The '105 patent expressly refers to CPT codes as standard "treatment" codes used for reporting "procedures" performed by the physician, using "procedures" and "treatment" essentially interchangeably. '105 Patent at 11:24-31. This is consistent with the usage of "procedure" in the Highmark system.

Accepting, for purposes of this summary judgment motion, Dr. Holland's testimony that ICD9 codes are sometimes used as data symbolic of patient symptoms, in the accused system the physician enters data symbolic of patient symptoms (ICD9 code), ***and*** enters data tentatively identifying a proposed mode of treatment (CPT Code). The ICD9 code is not entered for identifying a proposed treatment as claimed. The ICD9 codes indicate the "condition for which the patient is receiving treatment." *Id.* at ¶ 457. They do not *identify* the treatment.

However, Allcare contends that the entire authorization request form (APP 2890), not the CPT code alone, is the proposed treatment, citing Exh. D to Holland Report, p. 5, Holland Dep., pp. 166-182,

and Holland Rep. ¶ 426-433. To the contrary, according to Dr. Holland:

> "When a request for authentication is submitted through NaviNet, the Highmark system uses rules that include a consideration of procedure codes in order to determine whether to automatically approve the request or to send the request for clinical review." Holland Rep. ¶ 432. (emphasis added).

Thus, the request for authorization form includes the CPT procedure code, but it is that procedure code, not the remainder of the authorization form, that identifies the proposed treatment.

"Proposed mode of treatment" in the claims means "a suggested method of the management and care of a patient to combat disease or injury." Claim Constr. Rep. at 31. A symptom or diagnosis is the *reason* or justification for a proposed mode of treatment. A symptom is not "a suggested method of the management and care of a patient." The entry of the symptom is not for *identifying* the proposed mode of treatment, it is for supporting the medical necessity of the proposed treatment. The cited testimony and report of Dr. Holland do not raise a genuine material issue of fact otherwise.

By stipulation of the parties, "for" in the claims has been construed to mean "used to indicate the aim, or purpose of an action or activity." Cl. Const. Rep. at 28. Allcare argues that construction does not require a cause and effect relationship using, as an analogy, "tying my shoes for running around the block." Hrg. Trans. at 128-29.

The step of "entering . . . data symbolic of patient symptoms for tentatively identifying a proposed

mode of treatment" is disclosed in the specification as performed by the central processing system determining the recommended treatment protocols from the entered observed symptoms. '105 Patent at 6:59-67. The claim is not limited to the specific embodiment disclosed, but the limitation must be construed in that context. In the context of the specification, "for" and "used to indicate the aim, or purpose of an action or activity," require that the proposed mode of treatment must be identified by using the entered symptoms to determine one or more appropriate treatments. That is not done in the accused system, in which the physician enters both the diagnosis or symptoms, and the proposed treatment.

No reasonable juror could find that entry of a ICD9 code as a symptom in the accused system is "for tentatively identifying a proposed mode of treatment." Thus, it is recommended that summary judgment of non-infringement be granted on this ground.

3. Vicarious Liability

a) Introduction And Law

Allcare's allegations are limited to direct infringement, under 35 U.S.C. § 271 (a) Allcare does not allege "indirect infringement," *i.e.*, induced infringement under Section 271(b) nor contributory infringement under Section 271(c).

Direct infringement of a method claim requires that a party perform each and every step of the claimed method. *BMC Resources Inc. v. Paymentech, L.P.*, 498 F.3d 1373, 1378 (Fed. Cir. 2007). There is no genuine dispute that Highmark itself does not perform each and every step of Claims

52 and 53. Specifically, element (c) of Claim 52 requires that "data symbolic of patient symptoms" be entered "through such input means." The "input means" is a terminal in the physician's office and data entered through it is entered by the physician or her staff. *See* Cl. Const. Rep. at 12. It is undisputed that the physicians are not employed by Highmark.

Allcare contends that Highmark is liable for the acts of the physician, and thus is liable for direct infringement, under the doctrine of vicarious liability. The law imposes vicarious liability on a party for the acts of another in circumstances showing that the liable party *controlled* the conduct of the acting party. *Id.* at 1379. A defendant cannot avoid liability for infringement by having someone else carry out one or more of the claimed steps *on its behalf. Id.*

Direct infringement through vicarious liability is to be contrasted with induced infringement or contributory infringement, so-called "indirect infringement." Direct infringement is a strict-liability offense, while induced infringement requires "specific intent," to induce another to infringe, and contributory infringement requires knowledge and has its own very specific requirements. *Id.* at 1381. Allcare does not allege indirect infringement.

It is well established that traditional vicarious liability rules ordinarily make principals vicariously liable for acts of their agents. *Meyer v. Holley*, 537 U.S. 280, 285-86 (2003).

In *Cross Medical Products v. Medtronic Sofamor Danek*, an apparatus claim required connection of a surgical implant to the patient's bone, a step which

the surgeon completed. 424 F.3d 1293 (Fed. Cir. 2005). A representative of the implant manufacturer, Medtronic, appeared in the operating room, and identified devices to be used by the surgeons, but did not direct the surgeon's action in performing the surgery. The Federal Circuit found that Medtronic did not directly infringe through vicarious liability because, "if anyone makes the claimed apparatus, (including the connection to the bone), it is the surgeons, who are, as far as we can tell, not *agents* of Medtronic." *Id.* at 1311 (emphasis added). Thus, although it is not entirely clear, the Federal Circuit apparently applied an agency requirement.

Agency is defined in the Restatement as:

> "Agency is the fiduciary relationship that arises when one person (a 'principal') manifests assent to another person (an 'agent') that the agent shall act on the principal's behalf and subject to the principal's control, and the agent manifests assent or otherwise consents so to act."

Restatement (Third) of Agency § 1.01 (2006).

The Federal Circuit has not adopted the Restatement standard but has, at least, adopted the agency concepts that the principal must have controlled or directed the actor, who must be acting on behalf of the principal. *BMC Resources*, 498 F.3d at 1379.

b) Element 52(c)

As discussed above, in the accused system the physician's entry of data symbolic of patient symptoms does not satisfy the claim requirement

that such entry is "for tentatively identifying a proposed mode of treatment." Thus, there can be no direct infringement even under a theory of vicarious liability. Although that moots the vicarious liability issue, for completeness I will analyze vicarious liability hypothetically as if the physician's entry of patient symptoms were "for tentatively identifying a proposed mode of treatment."

On this motion the evidence must be viewed in the light most favorable to Allcare, but, in order to avoid summary judgment of non-infringement, Allcare must at least raise a genuine issue of fact as to Highmark's direction or control of the physician's entry of symptom data, and as to the physician entering that data on Highmark's behalf.

Here, when the physician enters the symptoms or diagnosis data and the proposed treatment data for utilization review, the physician is acting on behalf of the patient who is seeking reimbursement for the cost. The physician is not acting on behalf of Highmark. Thus, there can be no vicarious liability.

Moreover, the physician exercises his or her independent judgment as to the diagnosis, symptoms or treatment to enter. Highmark does not control or direct that decision. Nor does Highmark control or direct the decision of the physician or the patient to seek reimbursement from Highmark at all. Highmark's rejection of a proposed treatment does not require that the provider not perform it. Such rejection only informs the provider that Highmark will not pay for such procedure. Thus, Highmark does not direct or control the provider's entry of symptom data, or of the proposed treatment.

Highmark does control and direct the format in which the data must be entered so the system can accept it, but that is control only of the form of communication, not of the substance of the communication.

In *BMC Resources*, the defendant, Paymentech, managed a computer system through which a retail customer could pay a bill by entering information about the desired payment and a debit card number to be used for the payment. Paymentech's system routed the information to a debit network, which routed it to the customer's bank. The bank checked availability of funds and authorized or declined the transaction. If authorized, the bank made the payment from the customer's account. The bank informed the customer of the result through Paymentech. *Id.* at 1375-76.

The claimed method recited the steps performed by the bank as well as those performed by Paymentech. BMC alleged that Paymentech was liable for direct infringement through vicarious liability.

The Federal Circuit affirmed summary judgment of no infringement, finding insufficient evidence that Paymentech controlled or directed the bank. As here, Paymentech did not control or direct the decision by the bank. For the same reason, Highmark does not control or direct the decision of the physician in entering symptom data.

In *BMC Resources* and *Cross Medical*, the court set a high standard for vicarious liability. The court acknowledged that requiring control or direction may allow parties to avoid infringement through arm's length agreements. *Id.* at 1381. However, the court noted that, when a defendant participates in or

encourages infringement but does not directly infringe a patent, the normal recourse under the law is for the court to apply the standards for liability under indirect infringement. *Id.* at 1379. The Federal Circuit expressed concern that expanding the rules governing direct infringement, could subvert the statutory scheme for indirect infringement *i.e.* contributory infringement and induced infringement. *Id.* at 1381.

Concern over a party avoiding infringement by arm's-length cooperation can usually be offset by different claim drafting. *Id.* Here, as in *BM Resources*, Allcare could have drafted its claims to focus on one party. For example, 52(c) could have recited "receiving" rather than "entering" the data to focus on activities performed by Highmark rather than by the physician. Allcare chose instead to include within a single claim, acts which might be performed by different parties. The court in *BMC Resources* noted the difficulty of proving infringement of such a claim format. Nonetheless, the court refused to unilaterally restructure the claim or the standards for joint infringement to remedy the patentee's choice of claim format, *citing Sage Prods. Inc. v. Devon Indus. Inc.*, 126 F.3d 1420, 1425 (Fed. Cir. 1997) ("[A]s between the patentee who had a clear opportunity to negotiate broader claims but did not do so, and the public at large, it is the patentee who must bear the cost of its failure to seek protection for this foreseeable alteration of its claimed structure.") *Id.*

Allcare contends that Paymentech was more nearly in the position of the physician than in the position of Highmark. However, Paymentech, like Highmark,

was the central participant in the system, but relied on other participants, the physician here and the bank there, to perform some of the claimed steps.

Allcare argues that Highmark's reference, in its promotional reference to "our network providers" is sufficient to create control or an agency relationship. It is not sufficient, any more than a bank referencing "our customers" would be sufficient to create control or an agency relationship.

Allcare lists nine bullet points which it contends raise a genuine issue of material fact regarding Highmark's control of the entry of data symbolic of patient symptoms by the physician. Allcare Opp. at 27-28. The bullet points relate primarily to providing an authorization request form to the provider, requiring a specified format for data entry on that form, instructing the provider how to use the system, encouraging the provider to use the system, and the like. However, that does not equate to controlling what the physician chooses to enter. The physician can enter whatever diagnosis he or she deems appropriate. Highmark does not control the substance of the entry, only the format in which the information must be presented so that the system can understand the physician's diagnosis. Moreover, the physician does not enter the data on behalf of Highmark.

Even if it were found that the entry of data by the physician satisfies 52(c), Highmark would not be vicariously liable for the acts of the physician. It is recommended that summary judgment of non-infringement be granted on this ground as well.

c) The Preamble

At the hearing Highmark contended that it does not perform, direct or control all of the acts included in the "health care management system" recited in the preamble of Claims 52 and 53. Specifically, Highmark contended that it does not perform, direct or control the acts of "provid(ing) patients with complete and comprehensive maintaining and restoration of health by the treatment and prevention of disease. *See* Cl. Const. Rep. at p. 12.

That allegation was not presented in Highmark's briefs on this motion, and thus, it presumably was waived. However, because it was thoroughly argued at the hearing, I will not decide the waiver issue. I will consider the argument and make a recommended ruling. Because my recommended ruling on this issue is adverse to Highmark, Allcare will not be prejudiced by any lack of notice.

As discussed above, the system includes the recited provision of treatment and prevention of disease, albeit that is done by the providers. However, to satisfy the preamble of the claims, Highmark need only "manage" the healthcare system, not perform all aspects of it. "Managing" has been construed to mean "directing or administering." Cl. Const.. Rep. at 37. Highmark has stated that "Highmark can be likened to the central nervous system of the health care delivery process; the nexus through which all of the participants connect." H26100, Highmark 2000 Annual Report; *See* Holland Rep. at ¶ 21. A reasonable jury could find that Highmark administers the accused health care management system, even though it does not itself perform all aspects of the system.

Thus, this is not appropriate ground for summary judgment of non-infringement.

4. Conclusion

For the reasons discussed above in sections 3(b) and 4(b), it is recommended that the motion for summary judgment of non-infringement be granted.

B. Highmark's Invalidity Summary Judgment Motion

Highmark contends that Claims 52 and 53 are invalid as obvious in the view of the Bank One MPS, the PDE/IMP system, and certain prior art diagnostic smart systems.

1. Applicable Law

A patent claim is invalid "if the differences between the subject matter sought to be patented and the prior art are such that the subject matter as a whole would have been obvious at the time the invention was made to a person having ordinary skill in the art to which said subject matter pertains." 35 U.S.C. § 103. Obviousness is a question of law based upon underlying factual questions. *Leapfrog Enters., Inc. v. Fisher-Price, Inc.*, 485 F.3d 1157, 1160 (Fed. Cir. 2007). Those underlying factual questions include: (1) the scope and content of the prior art; (2) the differences between the claims and the prior art; (3) the level of ordinary skill in the pertinent art; and (4) any secondary considerations of nonobviousness, such as commercial success, long-felt but unresolved need, failure of others, copying, and unexpected results. *See Graham v. John Deere Co. of Kansas City*, 383 U.S. 1, 17-18 (1966).

Once granted, issued patents are entitled to a presumption of validity. 35 U.S.C. § 282. For this

reason, the law requires clear and convincing evidence of patent invalidity before a patent may be declared invalid. *Metabolite Labs., Inc. v. Lab. Corp. of Am. Holdings*, 370 F.3d 1354, 1365 (Fed. Cir. 2004).

Highmark relies primarily on the recent KSR case for its obviousness contentions. *KSR Int'l Co. v. Teleflex, Inc.*, 127 S. Ct. 1727 (2007). In *KSR*, the Supreme Court held that mere combinations of familiar elements found in the prior art are particularly likely to be obvious.

Neither the enactment of § 103 nor the analysis in Graham disturbed this Court's earlier instructions concerning the need for caution in granting a patent based on the combination of elements found in the prior art. For over a half century, the Court has held that a "patent for a combination which only unites old elements with no change in their respective functions . . . obviously withdraws what is already known into the field of its monopoly and diminishes the resources available to skillful men." This is a principal reason for declining to allow patents for what is obvious.

Id. at 1739 (citations omitted). Thus, "a court must ask whether the improvement is more than the predictable use of prior art elements according to their established functions." *Id.* at 1740.

"The combination of *familiar* elements according to *known methods* is likely to be obvious when it does *no more than yield predictable results*." Id. at 1739 (emphasis added). There are three factual predicates in the foregoing quote: (1) all of the elements of the claims must be "familiar;" (2) all of the elements of the claim must be arranged according to "known

methods;" and (3) the arrangement of all of the elements of the claim must be in such a way as to do nothing more than yield "predictable results." At trial, Highmark would have the burden to prove each of those facts by clear and convincing evidence.

2. Level Of Ordinary Skill In The Art

The Claim Construction Report adopted by the Court included the following determination of the level of ordinary skill in the art:

> a person of ordinary skill in the art would have sufficient knowledge of managed health care systems to understand how the various participants interact with each other, and sufficient knowledge of computer systems to enable design of flow charts for the interconnection and interaction of the various computer system components, the various participants in the managed health care system, and the functions each component or participant will perform. Cl. Const. Rep. at 9.

That determination was expressly limited to being for the purpose of claim construction. *Id.* Allcare's validity expert, Mr. Gross, offers a detailed analysis of the issue of ordinary skill in this art and proposes that persons who possess the kind of knowledge described in the Claim Construction Report would likely have a technical degree, or equivalent, plus about five years experience in the field. Gross Rep., APP 849-57, ¶ 20-51. That proposal is not inconsistent with the level of skill adopted by the court for claim construction purposes, but rather sets forth an example of specific background which might qualify a person as one of ordinary skill in the art. However, other backgrounds could also satisfy the

requirement as set forth in the Claim Construction Report.

Therefore, it is recommended that the court confirm the level of skill set in the Claim Construction Report as the level of ordinary skill in the art.

3. Scope And Content Of The Prior Art

a) PDE/IMP System

Mr. Ryce, a Highmark employee, submitted a declaration authenticating an article in a customer newsletter, published in March 1990 and describing a computerized utilization review system as being then in use. (The "PDE/IMP System".) Exh. A to Ryce Decl., HA108-114. Allcare has not disputed that the PDE/IMP article is prior art for what it discloses.

Mr. Ryce, based upon his memory, testified that the PDE/IMP system and other earlier HRS systems in public use before the filing date of the application for the '105 patent, included a number of claimed features not disclosed in the PDE/IMP article. Mr. Ryce admits that prior to his preparation for deposition, he had only a very high level of understanding of the PDE/IMP process, and had to be "brought up to speed as to details." Ryce Dep. APP 661.

Testimony regarding prior use generally requires corroboration. Uncorroborated testimony concerning prior public use can be "unsatisfactory" due to "the forgetfulness of witnesses, their liability to mistakes, (and) their proneness to recollect things as the party calling them would have them recollect...." *The Barbed-Wire Patents*, 143 U.S. 275, 284 (1892).

Accordingly, such testimony rarely satisfies the burden upon the accused infringer to prove invalidity by clear and convincing evidence. *See id.*

In *Woodland Trust v. Flowertree Nursery, Inc.*, the Federal Circuit commented that mere testimony of invalidating activity is treated with skepticism, "reinforced, in modern times, by the ubiquitous paper trail of virtually all commercial activity. It is rare indeed that some physical record (*e.g.*, a written document such as notes, letters, invoices, notebooks, or a sketch or drawing or photograph showing the device, a model, or some other contemporaneous record) does not exist." 148 F.3d 1368, 1373 (Fed. Cir. 1998).

For corroboration of his testimony, Mr. Ryce relies heavily on an On-Site-Review manual dated six months after the filing of the '105 application, and his memory that features disclosed in the manual were included in the system before the '105 filing date. Exhibit B to his declaration, HA119-126. The On-Site-Review manual is too late in time to provide sufficient corroboration to satisfy the clear and convincing evidence standard as to public use before the filing of the '105 application, when the evidence is viewed in the light most favorable to Allcare.

Mr. Ryce also relies on an "Internal Letter," which apparently was not a publication. Exhibit C to Ryce Decl. Thus, it apparently is not offered as prior art, but is offered as corroboration of Mr. Ryce's testimony. The Internal Letter describes a future development project extending well past the '105 filing date. It is insufficient to provide clear and convincing evidence, without genuine issue of fact, corroborating Mr. Ryce's testimony that certain

systems existed or were publicly used prior to that filing date.

In *Woodland*, the Federal Circuit set forth eight criteria for assessing corroboration. 148 F.3d at 1371. At least some of those eight criteria include factual issues which cannot properly be resolved on this summary judgment motion. Thus, the evidence is insufficiently corroborated to establish the facts testified to by clear and convincing evidence on summary judgment, when the evidence is viewed in a light most favorable to Allcare.

Therefore, for this summary judgment motion I will rely only on the PDE/IMP article (HA115) itself as the PDE/IMP prior art, and will not consider Mr. Ryce's uncorroborated testimony. This is not intended to disparage Mr. Ryce's veracity, but merely recognizes the strong concerns in the case law about uncorroborated oral testimony of prior use, and the need to view the evidence in the light most favorable to Allcare on this summary judgment motion.

b) Bank One System

Highmark also has submitted a declaration (HA190) from a former Bank One employee, Mr. Kurtyka, concerning a brochure describing a Bank One Medical Payment System (HA187). The declaration was prepared for use in other litigation involving the '105 patent. Allcare does not contest that the brochure was publicly distributed and is prior art for what it discloses.

In his declaration, Mr. Kurtyka testified, from his memory, that it was planned that the Bank One MPS would connect to other systems and perform additional claimed functions not described in the brochure. Mr. Kurtyka testified that the brochure

"and further details of the Bank One MPS as set forth above" were freely disseminated to numerous other persons outside Bank One before the April 8, 1991 filing date of the application for the '105 patent. Kurtyka Decl. at ¶ 14. Mr. Kurtyka's testimony, like that of Mr. Ryce, is not sufficiently corroborated for purposes of summary judgment.

Mr. Kurtyka testified that he met with Dr. Cummings and Mr. Connor and provided them the details "as set forth above." *Id.* Mr. Kurtyka produced correspondence corroborating the fact of these meetings and the general topics discussed, but not corroborating discussion of specific details as set forth in his declaration.

Subsequent to execution and submission of the Kurtyka declaration in the prior litigation, Allcare retained Mr. Kurtyka as a technical expert in this case. Mr. Kurtyka was deposed in this case in that capacity, and at his deposition confirmed that his prior declaration was truthful. Kurtyka Dep. Tr. 187:82 — 189:3, HA 158. Highmark contends that this makes Mr. Kurtyka's declaration admissible under FRE 801(d)(2)(c) as an admission by a person authorized by Allcare to make a statement concerning the subject. FRE 801 (d) (2) (c) only provides that a party admission is not hearsay. The issue regarding Mr. Kurtyka's declaration is not one of hearsay, but one of corroboration.

Confirmation of the declaration after retention as an expert for Allcare alleviates the concern discussed in *Woodland Trust* regarding the unreliability of uncorroborated testimony from a witness friendly to the accused infringer. 148 F.3d at 1371. However, whether or not it satisfies the *Woodland Trust* rule of

reason test need not be decided for purposes of this motion.

Even if it does satisfy that test, it is not clear from the declaration which of the "details" set forth were disclosed to others before April 8, 1991. The declaration describes numerous details and then later broadly states that the details "set forth above" were disclosed. There remains a genuine issue of material fact as to which details were disclosed—e.g., the details set forth in the Bank One MPS brochure, or some or all of the details of the plans to incorporate other features in the system. Highmark, in the deposition of Mr. Kurtyka, did not inquire about that.

Thus, even if admissible, when viewed in the light most favorable to Allcare the declaration is too vague concerning critical facts to provide clear and convincing evidence of disclosure of specific details beyond those described in the brochure, without genuine issues of fact. Thus, for purposes of this motion, I will rely only on the Bank One MPS brochure (HA187) itself as disclosing the prior art Bank One MPS.

As with Mr. Ryce, this is not intended to disparage Mr. Kurtyka's veracity.

c) Prior Art Diagnostic Smart Systems

Highmark also relies on U.S. Patent Nos. 4,290,114 (HA204) and 5,255,187 (HA288), as well as descriptions of systems in the Internist I publication (HA279), and a publication describing systems called MYCIN and ONCIN (HA330), all as disclosing prior art diagnostic smart systems. There is no dispute those patents and articles are prior art for what they disclose.

4. Claim 52

a) Differences Between The Claim And The Prior Art

i. Preamble

"Health care management system," as recited in the preamble of Claim 52 has been construed to mean:

"A system combining a patient, health care provider, bank or other financial institution, insurance company, utilization reviewer/case manager and employer so as to include within a single system each of the essential elements to provide patients with complete and comprehensive maintaining and restoration of health by the treatment and prevention of disease, especially by trained and licensed professionals and payment therefore, including." Cl. Const. Rep. at 12.

The prior art Bank One MPS brochure discloses a system combining the patient, health care provider, bank, insurance company and employer. HA187. Allcare contends that the patient is not disclosed as an "essential participant" in the Bank One MPS system. Allcare Opp. Memo. at p. 41. Allcare also contends that the brochure lacks disclosure of any combination of patients/and/or employers, and/or banks. *Id.* To the contrary, the Bank One MPS brochure expressly shows boxes for the employer, the bank, and the patient's checking account or credit card. Moreover, in note 1, it refers to medical cards issued to "policy holder enrollees," clearly referring to the patients.

Allcare admits that the Bank One MPS brochure "includes the patient as a participant," but only as

handing a card to the provider to verify eligibility. This is the same way in which the patient is combined with the system in the '105 patent. Allcare does not cite to any disclosure in the '105 patent which requires that the claims be interpreted to require that the patient communicate directly with the system, rather than through the health care provider.

The Bank One MPS document describes only a system for medical claims processing and payments. However, the preamble does not require that the computer system provide the health care. It specifies that the health care will be provided "by trained and licensed professionals." The preamble requires that the health care management system combine the listed participants that are essential for providing the health care and paying for it. The Bank One MPS combines all of those participants.

In any event, the term "comprehensive" in the preamble is used generally to indicate that the system has many participants and functions rather than to focus on the amount of interaction between those participants and the processing components. Claim Constr. Rep., at 12.

Allcare does not contend that Bank One MPS lacks any other element of the preamble. Thus, the Bank One MPS discloses all elements of the preamble of Claim 52.

The PDE/IMP system as described in the article (HA115) combines the provider, the insurer, or utilization reviewer and the patient, but does not disclose inclusion of a bank or employer.

ii. Element 52(a)

52(a) provides:

(a) entering into said data processor data identifying each of a predetermined plurality of persons;

The Bank One MPS brochure discloses that Bank One issues medical cards to policyholder enrollees who present the card to the provider for electronic validation for authorized services against a current database of patient information. Allcare contends that there is no disclosure that the Bank One database includes the identity of all members of a predetermined group. Clearly, the identity of every one of the policyholder enrollees who are authorized for coverage must be in the database, as claimed. How else could verification occur? The claim does not require that the data for "each" has been entered by the *provider*. Thus, the Bank One MPS brochure discloses the limitations of 52(a).

The PDE/IMP article (HA115) does not mention use of the PDE/IMP system to verify that the patient is in the insurer's list of those insured. Thus, although the insurer clearly must have had such a list in a database, and it seems likely that it was a part of the PDE/IMP system, there is no disclosure or teaching of that in the PDE/IMP article.

iii. Utilization Review

Claim 52 further provides:

"(b) entering into one of said data bank memories an identification of predetermined procedures requiring utilization review;

(c) entering through said input means into said data processor data symbolic of patient symptoms for

tentatively identifying a proposed mode of treatment and, when said proposed mode of treatment includes one of said predetermined procedures requiring utilization review, producing indicia indicative thereof;"

The PDE/IMP system, as disclosed in the article, appears to be used to obtain requested utilization review. However, the decision as to whether utilization review is required may be made by the nurse manually, which may not require the claimed data bank list of predetermined procedures requiring utilization review. There is no disclosure in the article of that decision being made by the computer system, nor of inclusion or use of such a data bank list.

Moreover, even if the PDE/IMP system, as disclosed in the article, included some type of data bank list, there is a genuine dispute of material fact as to whether it was a list of procedures or a list of diagnosis. *See Allcare* Opp. at 15-18; Gross Report at ¶ 103-104, APP 867.

Thus, there is at least a genuine issue of fact as to whether or not the PDE/IMP system article discloses utilization review as claimed.

The Bank One system brochure discloses "adjudication" of the claim before payment. Allcare contends that is not a disclosure of utilization review as claimed.

Element 52(b) requires entering into the data bank memories, an identification of predetermined procedures requiring utilization review. In its broadest sense "utilization review" can be prospective, concurrent, or retrospective. Claim Construction Report at 23. However, Element 52(c)

requires that data symbolic of patient symptoms be entered "for tentatively identifying a proposed mode of treatment for utilization review." A "proposed" mode of treatment requires that the utilization review be prospective, not retrospective, i.e., utilization review must be before treatment. Thus, Claim 52 requires prospective utilization review. The Bank One brochure discloses submission of the "claim" for "adjudication" which is followed by payment, indicating that the submission is after the treatment has been performed.

Thus, when the evidence is viewed in the light most favorable to Allcare, neither the PDE/IMP System article nor the Bank One MPS brochure discloses prospective utilization review as required by Claim 52 by clear and convincing evidence without any genuine issue of material fact.

iv. Entering...data symbolic of patient symptoms for tentatively identifying a proposed mode of treatment

Highmark cites various prior art patents and articles, identified above at 3(c), as disclosing "clinical diagnostic smart systems" which include "entry of symptom data into a computer which then would produce therapeutic recommendation." See Highmark's Opening Memo. at 8-9. Highmark does not assert that any of those patented systems included a comprehensive health care management system, utilization review, a list of procedures requiring utilization review, or prevention of payment until utilization review is completed.

The PDE/IMP article discloses entering through the input means "utilization review information" for

a nurse reviewer to determine whether hospital admission is medically appropriate. The article does not describe whether the input information is data symbolic of patient symptoms for tentatively identifying a proposed mode of treatment, or is data directly identifying the diagnosis or proposed treatment. There is substantial disagreement among the experts on this. Viewing the evidence in the light most favorable to Allcare, it is not clear and convincing, nor free of issues of fact, as required to satisfy Highmark's burden for summary judgment.

When viewed in the light most favorable to Allcare, the Bank One MPS brochure does not describe entering symptoms, tentatively identifying a proposed mode of treatment, or utilization review.

v. Element 52(d)

Claim 52 further provides:

(d) preventing payment therefore by said payment means until said utilization review has been obtained and data indicative thereof has been entered in said system.

The Bank One MPS brochure does disclose preventing payment if the claim does not pass "adjudication," but does not disclose prospective utilization review, and *ipso facto* does not disclose preventing payment until prospective utilization review has been obtained.

The PDE/IMP article does not mention payment or preventing payment.

b) Obviousness

Highmark relies on the *KSR* standard for its obviousness contentions. Obviousness does not require that claimed elements be found in a single

reference, but in *KSR* all claimed elements were disclosed in the prior art references collectively. That was important to the *KSR* holding. 127 S. Ct. at 1739-40. Highmark cites an accumulation of references, which collectively do not disclose all of the claimed elements. Therefore, *KSR* is inapplicable.

Viewing the evidence in the light most favorable to Allcare, neither the Bank One MPS brochure, nor the PDE/IMP article, nor any of the smart diagnostic system patents cited by Highmark, discloses a computerized prospective utilization review system as defined in Claim 52. In the absence of that element of the claim from all of the corroborated prior art relied upon by Highmark, Highmark has not shown that it can carry its burden of proof by clear and convincing evidence without any genuine issue of material fact.

5. Claim 53

As Claim 53 depends from, and includes all of the elements of Claim 52, Highmark's motion fails as to Claim 53 also.

6. Conclusion

It is recommended that summary judgment of invalidity be denied.

C. Allcare's Motion For Summary Judgment Of Enforceability

1. Introduction

To prevail on its allegation that the '105 patent is unenforceable by reason of inequitable conduct at trial, Highmark must show by clear and convincing evidence that the applicant or another substantively involved in the prosecution:

i) failed to disclose material information or submitted material false information; and

ii) did so with the intent to deceive the PTO.

Kingsdown Medical Consultants v. Hollister, Inc., 863 F.2d 867 (Fed. Cir. 1988).

The courts have uniformly held that cumulative prior art is immaterial by definition. *Micro Chemical v. Great Plains Chem.*, 103 F.3d 1538, 1550 (Fed. Cir. 1997), *cert. denied*, 521 U.S. 1122 (1997). In *Regents of Univ. Of California v. Eli Lilly & Co.*, the Federal Circuit reversed a holding that an undisclosed prior art reference was material and stated "even where an applicant fails to disclose an otherwise material prior art reference, that failure will not support a finding of inequitable conduct if the reference is 'simply cumulative to other references,' i.e., if the references teaches no more than what a reasonable examiner would consider to be taught by the prior art already before the PTO." 119 F.3d 1559, 1574-75 (Fed. Cir. 1997), *cert. denied*, 523 U.S. 1089 (1998).

It is undisputed that Dr. Cummings knew of the Bank One brochure, and the SSCI system, and neither was disclosed to the PTO. Allcare contends that each was cumulative to prior art considered by the Examiner, and therefore neither was "material."

Allcare denies an intent to deceive, but does not base this summary judgment motion on a lack of such intent. Allcare Reply at 4. The record contains many testaments to the integrity of Dr. Cummings and Mr. Connors. However, it would be inappropriate to determine their integrity or intent on this motion, which does not properly raise either.

2. The SSCI System

Highmark cites no documentation of the SSCI system, and relies on deposition testimony of Dr. Cummings. As Dr. Cummings is the inventor and is adverse to Highmark, his testimony does not require corroboration in order to be used against his own interest.

Highmark alleges that the SSCI system is not cumulative because it discloses the "entry and/or storage of items of medical history" as required in various claims of the '105 patent. Opp. at 30. However, the prior art Pritchard Patent No. 4,491,725, which was considered by the PTO in examination of the '105 patent application, discloses storage of the patient's "detailed medical history." APP 328 (5:60-62); APP 324, 328 (Fig. 5 and accompanying text at 6:25-29). Thus, the SSCI system is merely cumulative as to that element.

Highmark does not urge that any other element of the SSCI system is not disclosed in Pritchard. Therefore, the SSCI system is merely cumulative to the Pritchard patent, and is not material.

3. Bank One

Allcare contends that the Bank One brochure was cumulative to the Pritchard and Doyle (4,916,611) (APP 287) prior art patents which were both considered by the Examiner. Highmark contends that the Bank One system included the claimed utilization review while neither Doyle nor Pritchard did.

Allcare focuses on the Bank One brochure, while Highmark focuses primarily on the Kurtyka Declaration describing the system as allegedly

publicly used before the application for the '105 patent was filed. The Bank One brochure and system were discussed above in considering Highmark's motion for summary judgment of invalidity. There the evidence had to be viewed in the light most favorable to Allcare. On this motion by Allcare, the evidence must be viewed in the light most favorable to Highmark. *McKay*, 199 F.3d at 1380.

The parties disagree as to whether the Bank One brochure discloses utilization review as claimed. Element 52(b) requires entry into the data bank memories an identification of predetermined procedures requiring utilization review. In its broadest sense "utilization review" can be prospective, concurrent, or retrospective. Cl. Const. Rep. at 23. However, element 52(c) requires that data symbolic of patient symptoms be entered for tentatively identifying a proposed mode of treatment for utilization review. A "proposed" mode of treatment requires that the utilization review be prospective, not retrospective, i.e., utilization review in 52(c) is before treatment. Thus, Claim 52 requires prospective utilization review.

The Bank One brochure discloses submission of the "claim" for "adjudication" which is followed by payment, indicating that the submission is after the treatment has been performed. Even when viewed in the light most favorable to Highmark, no reasonable trier of fact could find that the Bank One brochure is clear and convincing evidence of prior art utilization review before treatment.

In the Doyle patent, a treatment is called a "diagnosis." Doyle patent at 2:47-55. Doyle discloses

verification that the plan will reimburse for the given diagnosis (treatment). *Id.* at 3:1-7 and 6:48-54. That is at least "adjudication" of a claim comparable to that disclosed in the Bank One brochure. Doyle discloses in at least as much detail as the Bank One brochure, systems that adjudicate and pay claims. Thus, even when the Bank One brochure and the Doyle patent are viewed in the light most favorable to Highmark, the Bank One brochure is cumulative to Doyle insofar as utilization review is concerned.

Apparently the Bank One system was still in the design stages when the application for the '105 was filed. However, Kurtyka testified in his declaration that the Bank One system was designed to provide prospective utilization review. HA175, Kurtyka Decl. at ¶ 11. Moreover, Kurtyka testified that he met with Dr. Cummings several times during 1990, gave him the brochure, and described the features of the Bank One system to Dr. Cummings "in detail." *Id.* at 175-178.

As discussed above, with respect to the invalidity motion, Mr. Kurtyka attached to his declaration copies of correspondence between himself and Mr. Connors, an investor in Dr. Cummings' invention, who attended some of the meetings with Dr. Cummings. That correspondence confirmed that Mr. Kurtyka met with Dr. Cummings and Mr. Connor and that the brochure was given to Mr. Connor. HA 180-85. No details of what was discussed about the Bank One system are provided in that correspondence. Mr. Kurtyka also testified at his deposition about those meetings. HA159-162.

Subsequent to execution and submission of the Kurtyka declaration in the prior litigation, Allcare

retained Mr. Kurtyka as a technical expert in this case. Mr. Kurtyka was deposed in this case in that capacity, and at his deposition confirmed that his prior declaration was truthful. Kurtyka Dep. Tr. 187:82 — 189:3, HA 158. Highmark contends that this makes Mr. Kurtyka's declaration admissible under FRE 801(d)(2)(c) as an admission by a person authorized by Allcare to make a statement concerning the subject.

As discussed above in Section IV (B) (3), FRE 801 (d) (2) (c) is directed only to the hearsay rule, and not to corroboration. The issue here is corroboration, not hearsay.

The Federal Circuit in *Woodland Trust* applied a rule of reason test for corroboration, and listed the interest of the witness as one of eight factors to be considered. 148 F.3d at 1371. It is clear from the analysis in that case that interest of the witness is a strong factor. It would be unreasonable to disregard as a matter of law on summary judgment, the fact testimony of Allcare's technical expert to the extent that it is contrary to the fact testimony of the inventor of Allcare's patent. Thus, Mr. Kurtyka's declaration and deposition testimony when viewed in a light most favorable to Highmark, raise a genuine issue of fact as to whether prospective utilization review was disclosed to Dr. Cummings by Mr. Kurtyka before the alleged invention by Dr. Cummings.

Although Mr. Kurtyka's declaration and deposition testimony are somewhat vague about details disclosed, a reasonable trier of fact could conclude that the Bank One system was disclosed to Dr.

Cummings in sufficient detail so as to be material to Claim 52 and not cumulative of Doyle or Pritchard.

Highmark also contends that the Bank One system included provision of ancillary services as recited in Claim 53. The brochure shows a box labeled "drug companies" but does not disclose that the system contacts the drug companies to provide or arrange for drugs to be supplied to the patient as opposed to paying for drugs already supplied. Again, the Kurtyka declaration fills that gap in regard to the Bank One system. When viewed in the light most favorable to Highmark, it raises a genuine issue of material fact.

Neither Doyle nor Pritchard discloses the system as ordering drug companies to fill prescriptions for patients.

Reviewing the evidence in the light most favorable to Highmark, a genuine question of material fact is raised as to materiality of the Bank One system, considered with the Bank One brochure.

4. Conclusion

For the reasons discussed above, it is recommended that Allcare's motion for summary judgment of enforceability be denied.

V. MOTIONS TO EXCLUDE EXPERT REPORTS AND TESTIMONY

A. Applicable Law

Rule 702 of the Federal Rules of Evidence sets forth the basic guidelines for admitting expert testimony. Expert testimony is admissible only when "(1) the testimony is based upon sufficient facts or data, (2) the testimony is the product of reliable principles and methods, and (3) the witness has applied the

principles and methods reliably to the facts of the case." Fed. R. Evid. 702; *Daubert v. Merrell Dow Pharmaceuticals, Inc.*, 509 U.S. 579, 592-93 (1993). The expert testimony must constitute "scientific, technical or other specialized knowledge [that] will assist the trier of fact to understand the evidence or to determine a fact in issue." Fed. R. Evid. 702.

Under both Rule 702 and *Daubert*, a court acts as a "gatekeeper" to ensure the relevance and reliability of the expert testimony admitted into evidence. *Kumbo Tire Co., Ltd. v. Carmichael*, 526 U.S. 137, 149 (1999). Thus, the court must determine "whether the reasoning or methodology underlying the expert testimony is scientifically valid and whether that reasoning or methodology properly can be applied to the facts in issue." *Daubert*, 509 U.S. at 592-93.

The *Daubert* factors are not limited to testimony regarding strictly scientific knowledge, but rather apply generally to "scientific, technical, or other specialized knowledge," including expert testimony concerning damages. *Kumho Tire Co. v. Carmichael*, 526 U.S. 137, 147-49 (1999). Thus, where such testimony's "factual basis, data, principles, methods, or their application are called sufficiently into question," the trial judge must determine whether the testimony has a reliable basis in the knowledge and experience of the relevant discipline. *Id.*, *citing Daubert*, 509 U.S., at 592. Where a case involves non-scientific testimony, the district court is not limited to the *Daubert* factors in assessing the reliability of the proffered expert testimony. *Id.* at 150-51. Rather, the district court enjoys broad discretion in determining how to assess reliability

and whether proffered testimony is, in fact, unreliable. *Id.*

Ultimately, the party offering the expert testimony bears the burden of demonstrating that the expert testimony is reliable and, therefore, admissible. *United States v. Williams*, 95 F.3d 723, 729 (8th Cir. 1996). If a trial court determines that "there is simply too great an analytical gap between the data and the opinion proffered," then the evidence should be excluded. *General Elec. Co. v. Joiner*, 522 U.S. 136, 147 (1997). Thus, the district court may evaluate whether the data relied upon by the expert is sufficient to support the conclusions and opinions being advanced, and "nothing in either Daubert or the Federal Rules of Evidence requires a district court to admit opinion evidence that is connected to existing data only by the *ipse dixit* of the expert." *Id.*

In the context of patent damages experts, reliable methodology requires that the legal grounds used by an expert to calculate damages be legally acceptable. *DSU Medical Corp. v. JMS Co., Ltd.*, 296 F. Supp. 2d 1140, 1148 (N.D. Cal. 2003).

B. Highmark's Motion To Exclude Sherwin Opinion and Report

Robert Sherman, Allcare's damages expert, is a Managing Principal and Vice President of Analysis Group, Inc., an economic consulting firm specializing in economics and finance. He holds a J.D. and an A.B. in Economics and Physics and is a Certified Public Accountant. According to his Report, he has frequently analyzed complex financial and economic issues relating to damages from a variety of sources, including lost profits computations and reasonable royalty analysis in patent disputes. In the past four

years, he has testified as a damages or financial expert at deposition and/or trial in 37 cases including several patent disputes. Sherwin Rep. at Section II, HAI.

1. Reliance On The Providence Agreement

Reasonable royalty damages may be based on an established royalty, if there is one, or if not, upon a hypothetical royalty resulting from a hypothetical arm's length negotiation between a willing licensor and a willing licensee. *Hansen v. Alpine Valley Ski Area, Inc.*, 718 F.2d 1075 (Fed. Cir. 1983). A comprehensive list of fifteen relevant factors in determining a reasonable royalty is set out in *Georgia-Pacific Corp. v. U.S. Plywood Corp.*, 318 F. Supp. 1116 (S.D.N.Y. 1970). Those *Georgia-Pacific* factors are widely recognized as appropriate by the courts, and specifically have been accepted by the Federal Circuit. *Unisplay S.A. v. American Electronic Sign Co.*, 69 F.3d 512 (Fed. Cir. 1995).

Highmark contends that Mr. Sherwin is relying on a single prior license between Allcare and Providence ("the Providence Agreement") as evidencing an "established royalty" and that the Providence Agreement does not satisfy the legal requirements for an "established royalty." To the contrary, Mr. Sherwin's report includes an 18-page hypothetical negotiation analysis expressing his opinion on the relevance or effect of each of the 15 *Georgia-Pacific* factors on that hypothetical analysis. Sherwin Rep. at pp. 6-23.

Based upon his review of the *Georgia-Pacific* factors, Mr. Sherwin concludes that the terms of the Providence Agreement are "the best proxy" for the license that would have been negotiated between

Allcare and Highmark in the hypothetical negotiation. Sherwin Rep. at p. 12. He explains why, in his opinion, the Providence Agreement is the best proxy. He then refers to that license as the "benchmark agreement" and expresses opinions on what adjustments from its royalty terms are appropriate in view of the *Georgia-Pacific* factors. *Id.* at pp. 12-22. He finds that many of the *Georgia-Pacific* factors are "neutral" in this case, and do not affect the benchmark royalty but he makes two adjustments under other factors. He concludes by re-stating his reliance on "the concept of a hypothetical negotiation" and expresses the opinion that Allcare and Highmark would have reached an agreement structured similar to the Providence Agreement, subject to the two adjustments discussed in his analysis of the *Georgia-Pacific* factors. *Id.*

Thus, Mr. Sherwin does not offer the Providence Agreement as an "established royalty" which substitutes for a royalty determined from a hypothetical negotiation, and the Providence Agreement need not satisfy the requirements for such an established royalty. Mr. Sherwin's determination of a starting point or "benchmark," and making adjustments which he determines appropriate under the *Georgia-Pacific* factor is not an unacceptable methodology for determining a reasonable royalty.

His reliance on a single one of the 32 Allcare licenses under the '105 patent as the benchmark from which he makes adjustments, and the fact that the total royalties collected under the Providence Agreement were very small in comparison to those

sought here do raise substantial issues , but go to the weight of his opinions not to their admissibility.

Highmark also contends that Mr. Sherwin is "cherry picking" the Providence Agreement, -- relying on the portions that help Allcare and rejecting the portions that harm Allcare. That also goes to the weight of the evidence. Any flaws should be explored on cross-examination or rebuttal, rather than by excluding the testimony.

Whether or not Mr. Sherwin's opinions are persuasive is for the finder of fact to decide. Mr. Sherwin's testimony in this regard satisfies the legal requirements of F.R.E. 702.

2. The Time Of The Hypothetical Negotiation

Mr. Sherwin acknowledges that the hypothetical negotiation "would have occurred at the point of first infringement in October 2000." Sherwin Rep. at p. 6. Although the Providence Agreement was negotiated 18-24 months later, the courts have sometimes permitted consideration of facts subsequent to the time of the hypothetical negotiation even though those facts would not have been known at the time. *Sinclair Refining Co. v. Jenkins Petroleum Process Co.*, 289 U.S. 689, 697-98 (1933); *Fromson v. Western Litho Plate and Supply Co.*, 853 F.2d 1568, 1575 (Fed. Cir. 1988); *Maxwell v. Baker*, 86 F.3d 1098, 1108-09 (Fed. Cir 1996); *Studiengesellschaft Kohle, M.B.H. v. Dart Industries, Inc.*, 862 F.2d 1564, 1571 (Fed. Cir. 1988).

Whether or not it is reasonable to rely upon an agreement negotiated after the time of the hypothetical negotiation as evidence of what would have been negotiated earlier depends upon the facts

of the particular case, such as the amount of time that passed, and whether intervening events would have changed the negotiating posture. In this case, I conclude that, the time difference goes to the weight of the opinions, not to their admissibility.

3. Negotiation Under Threat Of Litigation

Highmark cites *Hansen* for the proposition that licenses granted under the threat of litigation should not be considered as evidence of a reasonable royalty. The cited portion of *Hansen* involved the issue of whether offers to license made at a time when litigation was threatened or probable should be considered evidence of an "established royalty." *Hansen*, 718 F.3d at 1078-79. But Mr. Sherwin offers the Providence Agreement as the most relevant starting point for a hypothetical negotiation, not as an "established royalty" to be substituted for a hypothetical negotiation analysis. Thus, *Hansen* is not applicable.

In *Deere & Co. v. Int'l. Harvester Co.*, cited by Highmark, the Federal Circuit merely found that the district court *did not abuse its discretion* by giving little weight to a license negotiated against a backdrop of continuing litigation. 710 F.2d 1551, 1557 (Fed. Cir. 1983). The Federal Circuit found that the district court "duly considered IH's evidence and decided it was unpersuasive." *Id.* at fn. 5. Thus, *Deere* indicates that the arguments raised by Highmark go to the weight of Mr. Sherwin's testimony, not its admissibility.

Mr. Sherwin did not consider relevant those licenses entered in settlement of litigation. Sherwin Rep. at p. 7 and 9. However, he distinguished the Providence Agreement as not being settlement of

litigation. Highmark has not presented any comparison of the facts concerning any threats of litigation in the Providence negotiations to those for each of the Allcare licenses Mr. Sherwin concluded were "settlement agreements." Based on the record before the Court on this motion, any inconsistency would go to the weight of the opinion, and should be brought out by cross-examination or rebuttal at trial, not by exclusion under F.R.E. 702.

In the last page and one-half of its Opening Memo, Highmark makes arguments that Mr. Sherwin failed to consider that:

1) 29 of Allcare's 32 license were for lump sum payments;

2) the Providence Agreement allegedly is specially tailored for Providence;

3) Providence paid less than $9,000 in royalties before terminating the license and the allegedly infringing acts; and

4) Allcare did not license anyone else on the same terms as Providence.

All of these arguments go to the weight of Mr. Sherwin's opinions, not its admissibility.

It is recommended that the Court exercise its discretion to permit the jury to hear the testimony of Mr. Sherwin, and that the motion to exclude Mr. Sherwin's report and testimony be denied.

C. Allcare's Motion To Exclude Gleason Opinions And Report

Mark Gleason, Highmark's damages expert, is a Certified Public Accountant with a B.A. in Economics and a Masters in Business Administration, Finance and Accounting. He is Managing Director of Gleason

& Associates which provides a wide range of accounting services, including litigation support. He formerly was Director of the Financial Reorganization Group of Price Waterhouse where he served in the audit department. In the past four years he has testified at deposition and/or trial in 33 cases. Gleason Rep. APP 2 and 3.

1. Application Of *Georgia-Pacific* Factors

Allcare contends that Mr. Gleason did not apply the *Georgia-Pacific* factors. Allcare Opening Memo. at pp. 2-6. To the contrary, Mr. Gleason's report includes a lengthy consideration of all 15 *Georgia-Pacific* factors. Mr. Gleason considered the *Georgia-Pacific* factors and stated reasons for his opinions based on those factors.

Mr. Gleason applied the *Georgia-Pacific* factors in developing his opinion regarding the royalty Allcare would have accepted in a hypothetical negotiation in October 2000. He based his analysis on Allcare documents existing at the time. See Gleason Report at pp. 13-43 and 51-65, especially at pp. 24-26, 52-53 and 62-65. Whether Mr. Gleason's conclusions are correct goes to their weight, not their admissibility, and is a matter to be decided by the trier of fact, not by exclusion under F.R.E. 702.

Allcare and Mr. Sherwin disagree with Mr. Gleason's conclusions. Such disagreements between experts alone do not support exclusion under F.R.C.P. 702, but raise questions of fact for the jury.

2. Assumption Of Validity, Enforcement And Infringement

Allcare contends that Mr. Gleason, in his hypothetical negotiation analysis did not assume

that the '105 patent is valid, enforceable and has been infringed by Highmark. Allcare Opening Memo. at pp. 5 and 21-22. To the contrary, Mr. Gleason made clear that he takes no position on the validity, enforceability, or infringement of the '105 patent, but for purposes of his damages analysis he has assumed that it is valid, enforceable and infringed. Gleason Rep., p. 5, APP 6. Nothing in his damages analysis indicates otherwise.

Mr. Sherwin stated in a footnote in his report, that Highmark has not designed around the '105 patent, and that this indicates that Highmark does not have an economically feasible non-infringing alternative. Sherwin Rep., p. 14, fn. 63, APP 570. In rebuttal to that comment, Mr. Gleason opined that Highmark had not designed around the '105 patent because Highmark believes it is invalid, unenforceable, or not infringed, and Highmark's refusal to take a license suggests a firm conviction that the patent is invalid and not infringed. Gleason Rep., p. 31, bullet three, and p. 44, fn. 147.

That is not a revision of Mr. Gleason's assumption of validity, infringement, and enforceability for purposes of the hypothetical negotiation analysis. It purports to be evidence of what happened in the real world not the hypothetical world.

However, on this issue both damages experts are speculating and testifying about facts outside their personal knowledge and giving opinions outside their expertise. Highmark has not moved to strike footnote 63 of the Sherwin Report, nor to preclude Sherwin from testifying on the subject of that footnote. Highmark instead argues that Sherwin has "opened the door" for Gleason's rebuttal. If

Sherwin's testimony as stated in his footnote 63 is admitted into evidence at trial, it may open the door for rebuttal evidence from Highmark, but it does not open the door for Mr. Gleason to speculate on factual issues on which he has no personal knowledge and are outside his expertise as a damages expert. Speculation by one expert without objection does not open the door for speculation by a rebuttal expert over objection.

Thus, it is recommended that the third bullet point on p. 31 and footnote 147 be stricken from Mr. Gleason's Report and he not be permitted to testify thereto.

This recommendation does not infect the remainder of the Report of Mr. Gleason and does not warrant exclusion of any other portion of his Report.

At the hearing, Allcare requested the right to cross examine Mr. Gleason on the fact that portions of his Report had been stricken, allegedly showing that he improperly assumed the '105 patent not to be valid, enforceable and infringed in his damages analysis. Neither the inclusion of the stricken material in the Report, nor the striking of it, indicates such an improper assumption by Mr. Gleason. It is recommended that Allcare not be permitted to cross-examine on the exclusion of this testimony. The requested cross examination would not be relevant to any issue in the case, and would risk confusing the jury.

3. Entire Market Value Rule

Allcare contends that Mr. Gleason failed to account for the entire market value rule. Allcare Opening Memo. at pp. 5-6. But Mr. Gleason based his opinion, at least in part, on the principle of

apportionment of damages. Gleason Rep. at pp. 60-61. The apportionment rule permits recovery to be apportioned as between patented and non-patented components of a product or process where the patented features create only part of the value of the product or process. *Riles v. Shell Exploration & Production*, 298 F.3d 1302 (Fed. Cir. 2002); See, *Georgia-Pacific* factor 13. The entire market rule, on the other hand, allows for the recovery of damages based on the value of an entire product or process containing several features, even though only one feature is patented. This is permitted when the patented feature is the basis for customer demand for the entire product or process. *Fonar Corp. v. General Electric Co.*, 107 F.3d 1543 (Fed. Cir. 1997). The two rules are generally mutually exclusive. Which applies depends upon the facts of the case.

Allcare disagrees with Mr. Gleason's conclusion that apportionment rather than the entire market rule, is applicable, but that is not a failure of methodology that implicates F.R.E. 702, just as Mr. Sherwin's conclusion that the entire market rule applies and his failure to discuss apportionment is not such a failure.

4. Licenses Under Threat Of Litigation

Allcare contends that Mr. Gleason's conclusion that the Providence Agreement was entered under threat of litigation, and thus should not be relied on as a basis for determining an established royalty, was based on speculation. Allcare Opening Memo. at pp. 8-9. Mr. Gleason and Mr. Sherwin reviewed the same documents and came to different conclusions as to their import. Mr. Gleason's conclusion is not the type of "unsupported speculation" which the

Supreme Court cautioned against in *Daubert*. *See* 509 U.S. at 590. Resolving the different conclusions reached by the two experts is a question of fact for trial.

Allcare contends that Mr. Gleason improperly used a double standard because he stated that Allcare's licenses could not be relied upon to show an established royalty because they were allegedly entered under threat of litigation or were not arms-length transactions, yet he considered those same licenses during the course of his analysis. Allcare Opening Memo. at pp. 12-14.

The principle rationale for giving reduced weight to settlement induced royalty rates, is that the licensee may have been influenced to pay *more* than a reasonable royalty in order to avoid the imminent litigation. Each of the examples cited by Allcare as improper reliance by Mr. Gleason on agreements entered under threat of litigation, were cited by Mr. Gleason to show that terms *favorable* to the licensees were granted. See list in Allcare Opening Memo. at pp. 13 and 14. Such terms would not seem to have the inherent unreliability that may infect use of a litigation-induced agreement by a patentee to show that the terms accepted by a licensee establish a reasonable or established royalty. In fact, it seems these licenses show that even after threatening litigation, Allcare was willing to grant the cited terms. From that, a reasonable jury could find that such terms would have also been acceptable to Allcare in a negotiation where there was no threat of litigation. That is a sufficiently reliable methodology to avoid *Daubert* exclusion.

5. TriZetto

Allcare contends that Mr. Gleason's conclusion that the TriZetto system is a non-infringing market alternative, was based on speculation. Allcare Opening Memo. at pp. 8-11. Mr. Gleason is not qualified to determine as a technical matter whether or not the TriZetto system infringes, nor does he claim to have done so. Gleason Dep. 147:11-149:2; 370:16-372:14, APP 262-64 and 473-75. Mr. Gleason relies on the fact that Providence outsourced its system to TriZetto, and that Allcare has not sued TriZetto, as persuasive evidence that the TriZetto system is a better, non-infringing, market alternative. Gleason Dep. at pp. 20, 28 and 49. Whether or not that conclusion is correct is not the issue on this motion. His conclusion is not the type of "unsupported speculation" barred by *Daubert*. In any event, Mr. Gleason ultimately concludes that he cannot be certain that TriZetto could have provided its system to Highmark, and thus, he does not consider its availability as a non-infringing alternative in his ultimate conclusions. *Id.* at 63-64.

Allcare contends that Mr. Gleason should have spoken to someone at Providence to confirm his conclusion that the Providence Agreement was not entered under a threat of litigation and to someone at Providence or TriZetto to confirm whether they believed the TriZetto system was a non-infringing alternative. Allcare Opening Memo. at pp. 20-21. Mr. Gleason relied on facts sufficient to support admissibility of his opinions. If Allcare wishes to bring out additional facts to impeach Mr. Gleason, it should do so through cross-examination or other impeachment at trial.

6. Early Adopter Discount

Allcare contends that Mr. Gleason's methodology is unreliable because he applied an "early adopter" discount to the hypothetical license negotiation. Allcare Opening Memo. at pp. 11-12. Based on evidence cited by Mr. Gleason, he concludes that if Highmark had licensed the '105 Patent in October 2000, Highmark would have been an early adopter and received a discount that Mr. Gleason concludes was part of Allcare's standard policy at the time. Allcare contends that Highmark cannot get a discount for a license it never entered.

Allcare cites *Maxwell v. J. Baker, Inc.*, 86 F.3d 1098, 1109 (Fed. Cir. 1996). In *Maxwell*, the Federal Circuit affirmed damages in addition to a reasonable royalty as being appropriate in that case in order to provide adequate compensation. That does not support exclusion of Mr. Gleason's testimony that a discount was in order in this case. Again, Allcare simply disagrees with Mr. Gleason's conclusion.

7. End-User Usage And EULA Fees

Allcare contends that Mr. Gleason failed to account for the fact that Allcare would have sought compensation for end-user usage in the hypothetical negotiations, and made an improper conclusionary statement about EULA fees. Allcare Opening Memo. at pp. 15-16 and 23. An expert need not rebut all theories espoused by the opposing party in order to testify under F.R.E. 702. These topics, or Mr. Gleason's alleged failure to opine on them, may be appropriate subjects for cross-examination at trial, or for argument to the trier of fact, but they do not support exclusion of Mr. Gleason's opinions under F.R.E. 702 or *Daubert*.

Allcare contends that Mr. Gleason failed to consider other important facts discussed in Allcare's Opening Memo. at pp. 16-20. Those allegedly unconsidered facts, like those discussed above, do not go to Mr. Gleason's methodology and are not sufficient to preclude the testimony from assisting the trier of fact.

8. Conclusion

It is recommended that the motion be granted in part to exclude the third bullet point on p. 31 and footnote 147 from Mr. Gleason's report and related testimony, but that the remainder of the motion be denied.

D. Highmark's Motion To Exclude Holland Report And Testimony

Dr. Steven Holland M.D., Allcare's technical expert, is a medical doctor with experience working in health care delivery systems. He worked as a hospital administrator before attending medical school. He has co-designed utilization review and claims editing systems and has experience selling a utilization software application. He currently is Senior Vice President and Medical Director of the Long-Term Care Group, a long term care company which also offers outsourcing services including enrollment, underwriting, care management and claims processing for long term care insurance products. Holland Rep. at ¶ 6-10, HA3.

1. Holland's Reliance On ICD9 Codes

Highmark contends that Dr. Holland's reliance on the entry of ICD9 codes as data symbolic of patient symptoms is contrary to this court's claim construction. It is not.

As pointed out above in Section IV 2b, the discussion in the Claim Construction Report regarding ICD9 codes as indicating a treatment, rather than symptoms, related to identification of the structure disclosed in the specification for performing the first function of element 1(d). That was a 112-6 analysis and is not relevant to element 52(c) which is not in 112-6 format. The Claim Construction Report specifically limits application of the construction of "data symbolic of and "symptoms" to construing the first *function* of 1(d). The Report made clear that "the analysis of the structure for performing that function in 1(d) is not applicable" to 52(c). HA149-150.

Whether or not the Highmark system uses ICD9 codes as data symbolic of symptoms, as claimed in 52(c) was not resolved in the claim construction of 52(c) and is an infringement issue on which Dr. Holland may testify.

2. Reliance On Marketing Materials

Highmark objects to Dr. Holland's reliance on marketing materials to provide infringement. Infringement must be measured by an analysis of Hallmark's actual accused system. However, marketing materials may be relevant as circumstantial evidence of the accused system. *Liquid Dynamics Corp. v. Vaughan Co.*, 449 F.3d 1209, 1219 (Fed. Cir. 2006). Although they cannot trump the actual system, they may be helpful to the trier of fact. Dr. Holland's reliance on the marketing materials for certain of the claim limitations goes to the weight to be given to his testimony not to its admissibility.

3. Reliance On "Health eConnect" And "Lifestyle Returns"

Highmark objects to Dr. Holland's reliance on Highmark's "Health eConnect" and "Lifestyle Returns" programs to establish infringement because those programs apparently were not instituted until 2001 and 2005 respectively. Allcare has established that Dr. Holland's references to the "Health eConnect" and "Lifestyle Returns" are relevant to infringement at least during the time period in which they were used by Highmark. Dr. Holland acknowledges that those programs were "post-2000 system initiatives," and thus does not misstate the evidence. HA64.

4. Conclusion

It is recommended that the motion to exclude Dr. Holland's report and testimony be denied.

E. Allcare's Motion To Exclude Nobel Testimony

Dr. Jeremy Nobel M.D., Highmark's technical expert, is a medical doctor who also holds a Masters of Public Health degree and a Masters of Science in Epidemiology from the Harvard School of Public Health. He has been on the faculty of the Harvard School of Public Health since 1987 where he has principally focused on the use of information technology to improve health care delivery. He was a co-founder of NaviMedix whose web-based information technology products, including NaviNet, are used in the Highmark accused system. Nobel Report at ¶ 3-5, APP 2-3. Dr. Nobel left NaviMedix in 2002.

1. Nobel's Invalidity Opinion

a) The Preamble

Allcare contends that Dr. Nobel used different constructions of the preamble for his invalidity opinions versus his non-infringement opinions. However, Allcare admits that the construction used by Dr. Nobel for his invalidity opinion is correct. Allcare Opening at p. 7. Thus, this issue will be discussed below with respect to his non-infringement opinions.

b) Element 52(a)

Allcare contends that Dr. Nobel misapprehended the construction of 52(a) as requiring that only a single member of a predetermined group need to be identified, based on his analysis of Claim 1(a). Claim element 52(a) is a method limitation and is not subject to construction under the special rules of 35 U.S.C. § 112, par. 6 ("112-6"), whereas 1(a) is subject to 112-6. Cl. Constr. Rep. at 38. Therefore, Claim 1(a) is limited to entry of the data through the physician's office terminal, whereas 52(a) does not specify whether the data is entered through a data terminal at the office of the employer, the insurer, or the physician is not specified in 52(a). *Id.*

However, both 1(a) and 52(a) have in common "data identifying each of a predetermined plurality of persons." That is the function in 1(a), and the data entered in the method step of 52(a). That phase has the same construction in both claims, as Dr. Nobel correctly notes. Nobel Rep. at ¶ 60. Contrary to Allcare's construction at the hearing, 1(a) is not satisfied by a single person. Both 1(a) and 52(a) are limited to every one of a predetermined group. Hrg. trans. at 194; Cl. Constr. Rep. at 15.

Dr. Nobel's reliance on his 1(a) analysis as the basis for his 52(a) analysis may not have been the clearest approach, but it does not reflect "fundamentally unsound methodology," as Allcare alleges. The prior art he relies on does anticipate 52(a) properly construed, and his testimony would be helpful to the jury. *See* discussion of 52(a) in regard to the invalidity summary judgment motion above. It would be unreasonable to exclude Dr. Nobel from testifying on this issue. It is recommended that Dr. Nobel be permitted to testify that the prior art he relies on does disclose the limitations of 52(a).

c) Element 52(b)

Allcare alleges that the PDE/IMP system did not disclose a database of health care *procedures* requiring utilization review. As discussed in regard to the invalidity summary judgment motion, the PDE/IMP article does not disclose a list of either procedures or symptoms for that purpose. In considering Highmark's motion for summary judgment of invalidity, I refused to consider the Ryce Affidavit description of the PDE/IMP system, because when considered in the light most favorable to Allcare, that description was not adequately corroborated. However, the summary judgment standard will not be applicable at trial, and it is not before me to recommend a decision on admissibility at trial of the testimony set forth in the Ryce Affidavit. If it is admitted into evidence, it may raise a fact issue as to whether the PDE/IMP had such a list. *See* Ryce Affidavit at ¶ 10 and 12.

The Ryce Affidavit refers only to "predetermined rules" without specifying whether that means a list of predetermined procedures requiring utilization

review. However, if testimony as set forth in the Ryce Affidavit is admitted into evidence at trial, Dr. Nobel should be permitted to testify as to his expert opinion that "predetermined rules" does mean such a list. It is premature to exclude this testimony of Dr. Nobel until it is determined at trial whether the Ryce testimony will be admissible.

Moreover, the issue of whether any list in PDE/IMP was a list of symptoms or a list of procedures also is a question of fact and not an issue that is best decided in this Rule 702 motion.

Allcare objects to Dr. Nobel obtaining information, on which he relied, from a telephone conference with Mr. Ryce and others just days before his Invalidity Report was filed. Whether or not to admit such evidence from Mr. Ryce or others at trial is also an evidentiary issue beyond the scope of this Rule 702 motion to exclude Dr. Nobel's opinions. In any event, an expert may be permitted to rely on non-admissible evidence. Whether or not that will be appropriate here is a matter better decided at trial.

d) Element 52(c)

The same analysis applies to 52(c) as to 52(b) immediately above.

e) Alleged Lack of Written Description and Enablement

Dr. Nobel sets forth the appropriate legal standards (¶ 17), and his conclusions as to specific claim terms and his reasons for arriving at those conclusions (¶ 87-88 and 91-92).

Allcare disagrees with Dr. Nobel's conclusions, but his methodology is adequate to satisfy the requirements of Rule 702. If Allcare contends that

Dr. Nobel's conclusions are not correct, it should use cross-examination or rebuttal to establish that.

2. Nobel's Non-Infringement Opinions

a) Preamble

Allcare contends that Dr. Nobel uses a narrower construction of the preamble for his infringement opinion than for his validity opinion.

Dr. Nobel recites the same claim construction for both his invalidity and non-infringement opinions and expressly acknowledges that they must be the same. However, in his infringement opinion, he accepts, "for the sake of argument" Dr. Holland's definition of "system" ("a collection of components to accomplish a specific function or set of functions"). Nobel Rep. at 450, ¶ 163. Using that definition, he concludes that the Highmark "system" does not satisfy the preamble because the Highmark computer system does not perform the functions of treatment and prevention of disease. *Id.* at 450, ¶ 164. Those functions of course are performed by the providers, not by the electronic components.

Dr. Nobel is entitled to rebut the conclusions of Dr. Holland. However, Dr. Holland did not conclude that the preamble requires that the computer system treats and prevents disease. In fact, Dr. Holland concluded that the Highmark system includes "providers" who are "combined into the system." The '105 patent does not disclose the computer system as treating or preventing disease. The disclosed and claimed computer system is not a robotic doctor. In the '105 patent, as in the Highmark system, the provider treats and prevents disease.

Dr. Nobel takes an IEEE definition for "system" cited by Dr. Holland, and then misapplies it in a manner inconsistent with the patent, Dr. Nobel's invalidity analysis and Dr. Holland's report.

Dr. Nobel offers no opinion that the claim preamble does not read on the Highmark system based on a claim analysis which he contends is correct; the analysis that he used for his invalidity opinion. Accordingly, it is recommended that Dr. Nobel be precluded from opining at trial that the claim preamble does not read on the Highmark system.

I do not recommend exclusion of Dr. Nobel's invalidity testimony, nor the remainder of his non-infringement testimony, because those are severable.

b) Unsupported Paragraphs

Allcare complains that numerous paragraphs in Dr. Nobel's Report make statements of alleged fact, without any supporting citation to the record. See Allcare Opening Brief at 20 for list of allegedly "unsupported paragraphs." It certainly would have been much better practice for Dr. Nobel to have given citations for those numerous statements in his report. Allcare deposed Dr. Nobel one week after his report was filed and thus seemingly had an opportunity promptly to inquire as to the source of the statements. At oral hearing Allcare argued that it did not have time because of the seven-hour time limit on the deposition.

At the hearing, Allcare requested that Dr. Nobel be required to amend the paragraphs of his report listed in lines 1-2 of p. 20 of Allcare's Opening Brief to cite the evidentiary support. Highmark agreed to do so. Trans. at 205-06. It is recommended that Dr. Nobel be ordered to make such amendment, within an

appropriate time following adoption of this Report by the Court, to the extent support in the record is not cited and is available. That will eliminate any potential prejudice to Allcare.[3]

c) Conversations With Highmark's Employees

Allcare objects to Dr. Nobel's testifying based upon what he learned in conversations with "previously undisclosed" persons at Highmark who assisted with a demonstration of the accused system. Dr. Nobel, as Highmark's technical expert, was entitled to view a demonstration of the accused system, and to ask Highmark's employees any questions he had that would assist him in understanding the system.

It is understood that the accused system was earlier demonstrated to Allcare's technical expert, Dr. Holland. Presumably Allcare also has received in discovery other evidence describing the accused system. Thus, Allcare has not established that it has suffered prejudice from conversations between Dr. Nobel and employees of Highmark.

In any event, Allcare noted at the hearing that if Dr. Nobel did not testify regarding non-infringement of the preamble limitations, Allcare's objections to this objection would be moot. Hrg. trans. at 211. Above, I have recommended that Dr. Nobel not be permitted to testify as to the preamble on the infringement issue. If that recommendation is accepted by this Court, this issue becomes moot.

---

[3] It is noted that if this Court enters summary judgment of non-infringement, as recommended in this report, the amendment will be moot.

3. Conclusion

For the reasons stated above, it is recommended that:

a) Dr. Nobel not be permitted to opine at trial that the claim preamble does not read on the Highmark system; and

b) Dr. Nobel be ordered to amend his Report to cite evidentiary support for certain paragraphs of his report as identified above, to the extent that such support is available in the record.

It is recommended that the motion to strike and exclude Dr. Nobel's Report and testimony be denied except as specified above.

Dated: April 24, 2008

/s/ Don W. Martens
Don W. Martens,
Special Master

ATTACHMENT A

Claims 52 and 53 of the '105 patent provide:

52. A method of managing a comprehensive health care management system utilizing a data processor, data bank memories, input means and payment means comprising:

(a) entering into said data processor data identifying each of a predetermined plurality of persons;

(b) entering into one of said data bank memories an identification of predetermined procedures requiring utilization review;

(c) entering through said input means into said data processor data symbolic of patient symptoms for tentatively identifying a proposed mode of treatment and, when said proposed mode of treatment includes one of said predetermined procedures requiring utilization review, producing indicia indicative thereof; and

(d) preventing payment therefore by said payment means until said utilization review has been obtained and data indicative thereof has been entered in said system.

53. A method of managing a health care management system according to claim 52 in which the step of tentatively identifying a proposed mode of treatment further includes checking said proposed mode of treatment and when said proposed mode of treatment includes an ancillary service, producing indicia indicative thereof and providing said ancillary service.

IN THE UNITED STATES DISTRICT COURT
FOR THE NORTHERN DISTRICT OF TEXAS
FORT WORTH DIVISION
CIVIL ACTION NO. 4:03-CV1384-Y

HIGHMARK, INC.

Plaintiff,

v.

ALLCARE HEALTH
MANAGEMENT SYSTEMS, INC.

Defendant.

AMENDED ORDER ADOPTING FINDINGS AND RECOMMENDATIONS OF SPECIAL MASTER

This is a patent infringement case. Plaintiff Highmark, Incorporated ("Highmark"), filed this action against defendant Allcare Health Management Systems, Incorporated ("Allcare") seeking declaratory judgment of invalidity, noninfringement, and unenforce-ability of U.S. Patent No. 5,301, 105 ("the '105 patent"). Allcare filed a counterclaim alleging infringement of the '105 patent.[1]

---

[1] Allcare initially alleged infringement of Claims 52, 53, and 102 of the '105 patent but has since withdrawn its allegations of infringement of Claim 102. To the extent not already done, Allcare's claim for infringement of Claim 102 of the '105 patent is DISMISSED WITH PREJUDICE. (Note that the original order indicated that the dismissal was without prejudice. The purpose of this

The Court previously referred Allcare's motion for claim construction to Don Martens as special master. The Court adopted his recommendations on March 23, 2007. Thereafter, the parties filed the following motions:

1. Allcare's motion (doc. #397) for summary judgment on the enforceability of the '105 patent.

2. Highmark's motion (doc. #399) to exclude the expert opinion and report of Robert A. Sherwin regarding reasonable royalty calculation (relevant to damages).

3. Highmark's motion (doc. #400) for summary judgment of non-infringement and invalidity of the '105 patent.

4. Highmark's motion (doc. #406) to exclude the testimony of Dr. Stephen D. Holland on noninfringement.

5. Allcare's motion (doc. #409) to exclude the expert testimony of Mark M. Gleason regarding a reasonable royalty calculation (relevant to damages).

6. Allcare's motion (doc. #410) to exclude the expert testimony of Jeremy Nobel, MD.

Pursuant to the parties' joint motion, the Court referred these motions to Martens as a special master and directed him to provide the Court with a report and recommended disposition. Martens reviewed the motions, responses, and replies and conducted a hearing on February 26, 2008. He then filed his report and recommended decisions on April 25, 2008. Under Federal Rule of Civil Procedure

---

amended order is to point out that the dismissal was with prejudice.)

53(g)(2), Allcare filed certain objections to Martens's recommendations.

The Court has reviewed Martens's report and recommendations, Allcare's objections, Highmark's response, and Allcare's reply.[2] After review, the Court OVERRULES Allcare's objections for the reasons stated in Martens's report and recommendations as well as for the reasons stated in Highmark's response and the Court ADOPTS, as stated below, Martens's recommendations. See FED.R.CIV.P. 53(g)(1).

Accordingly,

1. Highmark's motion (doc. #400) for summary judgment is PARTIALLY GRANTED AND PARTIALLY DENIED. On the issue of noninfringement, Highmark's motion for summary judgment is GRANTED. On the issue of invalidity of the '105 patent, Highmark's motion for summary judgment is DENIED.

2. Allcare's motion (doc. #397) for summary judgment on the enforceability of the '105 patent is DENIED.

3. Highmark's motion (doc. #399) to exclude the expert opinion and report of Robert A. Sherwin is RENDERED MOOT.[3]

---

[2] The Court conducted a *de novo* review of Allcare's objections under Rule 53(g)(3), (4).

[3] Because the Court has adopted the special master's recommendation that summary judgment of noninfringement of the '105 patent should be entered, Sherwin's testimony is now moot since it would only be relevant if Highmark were found to have infringed on the '105 patent. Had the motion not been rendered moot, the

4. Allcare's motion (doc. #409) to exclude the expert testimony of Mark M. Gleason is RENDERED MOOT.[4]

5. Highmark's motion (doc. #406) to exclude the testimony of Dr. Stephen D. Holland is DENIED.

6. Allcare's motion (doc. #410) to exclude the expert testimony of Jeremy Nobel, MD, is DENIED vis-á-vis his testimony regarding the invalidity of the '105 patent. In regards to his testimony regarding the non-infringement of the '105 patent, the motion is RENDERED MOOT.

SIGNED September 2, 2008.

/s/ Terry R. Means
UNITED STATES DISTRICT JUDGE

Court would have adopted the special master's recommendation and denied the motion.

[4] Because the Court has adopted the special master's recommendation that summary judgment of noninfringement of the '105 patent should be entered, Gleason's testimony is now moot since it would only be relevant if Highmark were found to have infringed on the '105 patent. Had the motion not been rendered moot, the Court would have adopted the special master's recommendation and granted the motion in part to exclude the third bullet point on page thirty-one and footnote 147 of Gleason's report. In all other aspects, the motion would have been denied.

RECORD
AND
BRIEFS

Supreme Court, U.S.
FILED
DEC 2 - 2013
OFFICE OF THE CLERK

No. 12-1163

IN THE
Supreme Court of the United States

HIGHMARK INC.,
Petitioner,

v.

ALLCARE HEALTH MANAGEMENT SYSTEMS, INC.,
Respondent.

On Writ of Certiorari to the United States Court of Appeals for the Federal Circuit

JOINT APPENDIX, VOLUME II

NEAL KUMAR KATYAL
Counsel of Record
for Petitioner
DOMINIC F. PERELLA
DAVID M. GINN
R. CRAIG KITCHEN*
AMANDA K. RICE*
JONATHAN D. SHAUB*
HOGAN LOVELLS US LLP
555 13th Street, NW
Washington, DC 20004
(202) 637-5600
neal.katyal@hoganlovells.com

DONALD R. DUNNER
Counsel of Record
for Respondent
DON O. BURLEY
JASON W. MELVIN
CORA R. HOLT
FINNEGAN, HENDERSON,
FARABOW, GARRETT &
DUNNER, LLP
901 New York Avenue, NW
Washington, DC 20001
(202) 408-4000
don.dunner@finnegan.com

*Not admitted in DC; supervised by members of the firm

(additional counsel listed on inside cover)

PETITION FOR CERTIORARI FILED MARCH 25, 2013
CERTIORARI GRANTED OCTOBER 1, 2013

Library of Congress
Law Library

Additional counsel for petitioner:

CYNTHIA E. KERNICK
JAMES C. MARTIN
THOMAS M. POHL
REED SMITH LLP
225 Fifth Avenue
Pittsburgh, PA 15222
(412) 288-3131

Additional counsel for respondent:

ERIK R. PUKNYS
FINNEGAN, HENDERSON, FARABOW, GARRETT & DUNNER, LLP
3300 Hillview Avenue
Palo Alto, CA 94304
(650) 849-6600

TABLE OF CONTENTS

Page

VOLUME I

Relevant Docket Entries from the United States Court of Appeals for the Federal Circuit 1

Relevant Docket Entries from the United States District Court for the Northern District of Texas 3

Answer and Counterclaim of Defendant, filed December 16, 2003 34

Excerpts from Joint Status Report, filed January 20, 2004 46

Initial Scheduling Order, filed March 19, 2004 49

Proposed Joint Claim Construction, filed October 27, 2004 55

Excerpts from Declaration of Robert H. Shelton, filed January 12, 2005 221

Excerpts from Declaration of Thomas G. Plaskett, filed January 12, 2005 225

Order Striking Claim-Construction Motion and Related Filings, Directing an Amended Claim-Construction Motion, and Rendering Moot Related Filings and Motions, filed August 12, 2005 228

Notice Regarding the Appointment of a Special Master, filed July 19, 2006 232

Special Master's Report and Recommended Decisions on Claim Construction, filed December 20, 2006 236

TABLE OF CONTENTS—Continued

Page

Order Adopting Findings and Recommendations of Special Master, filed March 23, 2007 314

Order Granting Joint Motion to Appoint Special Master, filed December 19, 2007 317

Exhibit D (Infringement Claim Chart) to Expert Opinion of Robert A. Sherwin Regarding Reasonable Royalty Calculation, filed December 19, 2007 320

Special Master's Report and Recommended Decisions on Summary Judgment Motions and Motions to Exclude Expert Opinions and Reports, filed April 25, 2008 361

Amended Order Adopting Findings and Recommendations of Special Master, filed September 2, 2008 442

VOLUME II

Excerpts from Highmark's Appendix in Support of Motion for Exceptional Case Finding and Award of Attorney Fees, filed October 28, 2008:

Excerpts of Testimony of Robert H. Shelton, taken July 29, 2004 446

Letter from Robert H. Shelton to Highmark, dated April 16, 2002 462

Letter from Steven G. Hill to Frederick Colen and Cynthia Kernick, dated December 11, 2002 467

Letter and Attachment from Steven G. Hill to Don W. Martens, dated November 15, 2006 470

TABLE OF CONTENTS—Continued

Page

Excerpts from Allcare's Objections and Responses to Highmark's First Set of Interrogatories (Nos. 1.1-1.3), filed October 28, 2008 489

Excerpts from Allcare's Response in Opposition to Highmark's Motion for Exceptional Case Finding and Award of Attorney's Fees and Expenses and Brief in Support Thereof, filed January 7, 2009:

Excerpts from Declaration of Robert H. Shelton, dated January 6, 2009..... 498

Exhibit A to Declaration of Robert H. Shelton, filed January 7, 2009..... 507

Excerpts from Declaration of Steven G. Hill, dated January 6, 2009..... 535

Email from Cynthia Kernick to Steven G. Hill, dated August 8, 2002..... 614

Excerpts from Hearing on Motions in *Allcare Health Management System, Inc.* v. *Trigon Healthcare, Inc.*, No. 02-756-A (E.D. Va.), dated January 10, 2003 618

Excerpts from Transcript of Oral Argument in *Highmark* v. *Allcare*, No. 2009-1065 (Fed. Cir.), argued July 10, 2009..... 628

Order Granting Motions to Withdraw and Granting Motion for Extension of Time, filed April 26, 2010..... 640

Memorandum Opinion and Order in *Allcare Health Management System, Inc.* v. *Trigon Healthcare, Inc.*, No. 02-756-A (E.D. Va.), filed February 3, 2003 644

TABLE OF CONTENTS—Continued

Page

Memorandum Opinion and Order in *Allcare Health Management System, Inc.* v. *Trigon Healthcare, Inc.*, No. 02-756-A (E.D. Va.), filed February 3, 2003 663

SUPPLEMENTAL JOINT APPENDIX

U.S. Patent No. 5,301,105 ..... SA1

* * *

The appendix to the Petition for Certiorari contains the following material which is omitted from the Joint Appendix:

A. Opinion of the United States Court of Appeals for the Federal Circuit, decided August 7, 2012 ..... 1a

B. Opinion and Order of the District Court Granting Motion for Exceptional-Case Finding and Attorneys' Fees, filed April 1, 2010 ..... 44a

C. Order of the District Court Granting Motions to Reconsider, filed May 6, 2010 ..... 97a

D. Opinion and Order of the District Court Reconsidering and Vacating Sanctions, filed August 9, 2010 ..... 103a

E. Order of the District Court Awarding Attorneys' Fees, filed November 5, 2010..... 153a

F. Order of the District Court Denying Motion To Alter or Amend the Judgment or for a New Trial, filed January 18, 2011 ..... 171a

TABLE OF CONTENTS—Continued

Page

G. Order of the United States Court of Appeals for the Federal Circuit Denying Panel Rehearing and Rehearing *En Banc*, filed December 6, 2012 ..... 179a

IN THE UNITED STATES DISTRICT COURT
FOR THE NORTHERN DISTRICT OF TEXAS
FORT WORTH DIVISION
CIVIL NO. 4:03 CV-1384-Y

HIGHMARK, INC.

Plaintiff,

v.

ALLCARE HEALTH
MANAGEMENT SYSTEMS, INC.

Defendant.

ORAL DEPOSITION OF
ROBERT SHELTON
JULY 29, 2004

ORAL AND VIDEOTAPED DEPOSITION OF JOHN L. SIGALOS, produced as a witness at the instance of the Plaintiff, and duly sworn, was taken into the above-styled and –numbered cause on JULY 29, 2004, from 8:42 a.m. to 3:07 p.m., before CHARIS M. HENDRICK, CSR in and for the State of Texas, reported by machine shorthand, at the offices of Sidley, Austin, Brown & Wood, located at 717 N. Harwood, Suite 3400, Dallas, Texas, pursuant to the Federal Rules of Civil Procedure and the provisions stated on the record.

APPEARANCES

FOR THE PLAINTIFF:
MR. ROBERT D.KUCLER

MS. CYNTHIA E. KERNICK
REED SMITH
435 Sixth Avenue
Pittsburgh, Pennsylvania 15219
(412) 288-4598

FOR THE DEFENDANT:
MR. STEVEN G. HILL
HILL, KERTSCHER & WHARTON
3350 Riverwood Parkway, Suite 800
Atlanta, Georgia 30339
(770) 953-0995

INDEX

Appearances	2
ROBERT SHELTON	
Examination by Ms. Kernick	6
Signature and Changes	190
Reporters Certificate	192

EXHIBITS

Exhibit 1 – Debit Card System	62
Exhibit 2 - Original Sketch Outline System	62
Exhibit 3 - Wellness Card System	63
Exhibit 4 - Wellness Card System	63
Exhibit 5 - Allcare Health Management System	63
Exhibit 6 - Allcare Licenses and Settlement Agreements	74
Exhibit 7 - Deposition of Robert Shelton – February 29, 2000	77
Exhibit 8 - Deposition of Robert Shelton – March 1, 2000	79
Exhibit 9 - Deposition of Robert Shelton – November 6, 2002	81

Exhibit 10 - 82
Deposition of Robert Shelton – November 7, 2002

Exhibit 11 - 84
Deposition of Robert Shelton – November 8, 2002

Exhibit 12 - 84
Deposition of Robert Shelton – November 8, 2002

Exhibit 13 - 121
Allcare Health Balance Sheets

Exhibit 14 - 136
Allcare Health Stock Ledger

Exhibit 15 - 141
Claims 1 & 52 Illustrated

Exhibit 16 - 160
Allcare Health Composite Exhibit

Exhibit 17 - 163
Medical Payments System

Exhibit 18 - 164
Hospital/PPO Sponsorship

Exhibit 19 - 165
Health Care Payments Overview

Exhibit 20 - 166
Email to Tom Plaskett from Robert Shelton

Exhibit 21 - 169
Email to Tom Plaskett from Robert Shelton

Exhibit 22 173
Memo to Des Cummings from Robert Shelton

Exhibit 23 - 176
Memo to Des Cummings from
Robert Shelton

Exhibit 24 181
Fax to Mary Lou and Des from
Charles Singer

Exhibit 25 - 184
Fax to T.L. Trimble from Mark Buhler

Exhibit 26 - 186
Handwritten notes by Robert Shelton

* * *

A. I don't know if the number is correct, but in the number of approximately that amount, yes.

Q. Would it be a fair statement that on June 11th, 1999, Allcare instituted the litigation in the Northern District of Texas against Cerner Corporation; Eclipsys Solutions Corporation; Envoy Corporation; Express Scripts; Diversified Pharmaceuticals; Healtheon Corp.; IDX Systems Corp.; McKesson HBOC; MedicaLogic, Inc.; Merck-Medco Managed Care; PCS Health Systems; Science Applications International Corp., those entities?

A. I believe that is correct, yes.

Q. And would it be fair to say that prior to instituting that litigation, Allcare made attempts to get each of those entities to accept a license under the 105 patent?

A. Yes.

Q. And each of them refused to accept a license under the 105 patent on a voluntarily basis?

A. Yes.

Q. And then would it also be fair to say that on October 12th, 2000, Allcare instituted another case in the Northern District of Texas, this time against Advance Paradigm, Inc.; the Araz Group, that's A-r-a-z, Group, Inc.; Argus Health Systems; Caremark, Inc.; Consultec, C-o-n-s-u-l-t-e-c, LLC; First Health Services Corp; Managed Pharmacy Benefits, Inc.; MedImpact Healthcare Systems, Inc.; National Medical Health Card System, Inc.; National Prescription Administrators, Inc.; ProVantage Health Services, Inc.; TDI Managed Care Services, Inc. doing business as Eckerd Health Services, E-c-k-

e-r-d; and WHP Health Initiatives, Inc.; and that would be fair to say?

A. That sounds accurate.

Q. Would it also be fair to say that Allcare attempted to get each of those entities to take a license under the 105 patent, and each of them refused to do so voluntarily?

A. No. At least in one case, I do not believe that's the case.

Q. Which case is that?

A. The one I am thinking of is MedImpact where I don't believe that we contacted them before they were sued.

Q. You just sued them without asking them to take a license?

A. Yes.

Q. And have you done the math – let me just back up.

Each of those two cases that I mentioned, all of those parties settled, didn't they?

A. No.

Q. What happened?

A. In one case, Araz Group, we released the litigation and agreed that they – to drop the litigation without a settlement.

Q. But you dismissed that case without prejudice to bring suit again, didn't you?

A. Yes.

Q. And –

A. And the same thing – excuse me.

Q. Go ahead.

A. I believe the same thing in the case of SAIC. We dismissed the SAIC defendant.

Q. You say you dismissed them. Did you dismissed them subject to a confidentiality agreement?

A. No.

Q. Of the remaining – let me just see if I have that right – 25 parties in those two litigations, did you ever calculate the average amount of payment and settlement to take a license or a covenant not to sue under the 105 patent?

A. I believe I did circulate an average.

Q. And it would be fair to say that that was approximately $250,000, on average?

A. I thought it was slightly higher.

Q. You shrugged your shoulders. The court reporter can't take down a shrug of the shoulders.

A. I thought it was slightly higher.

Q. In the Trigon litigation, are you aware of having read any papers in which there was – either party took the position that it was approximately $250,000 in settlement or payment for covenant not to sue that were made by those 25 entities?

A. My recollection was in Trigon it was $308,000 as opposed to 250, but that's just my recollection at this sitting.

Q. So your recollection is it's only $308,000 on average that was paid by those 25 entities in order to end the patent infringement litigation that they were involved in?

A. By doing an arithmetic average, that's my recollection

Q. In fact, the highest payment was only $950,000; is that a fair statement?

A. You are excluding any subsequent litigation?

Q. Of those 25 that we've been discussing in those two litigations.

A. Yes.

Q. And the lowest in those two litigations was $40,000; is that a fair statement?

* * *

Q. Has Allcare been successful in getting any development – in – let me rephrase that. Has Allcare been successful in finding any development partners to work with them to develop the invention that is described in the 105 patent?

A. Regretably, no.

Q. Have you made your best efforts to attempt to acquire development partners?

A. Without overthinking your question about what you mean by best efforts, as a legal term, I am not so sure.

Q. Have you worked hard at it?

A. Absolutely.

Q. Have you worked 50 percent of your time at it?

A. Personally?

Q. Yes.

MS.KERNICK: Excuse me. Let's go off the record for a moment.

(Recess taken.)

A. No.

Q. (By Ms. Kernick) All right. Did there come a time in which you, Robert Shelton, became responsible for the development efforts related to finding partners to help devise, implement the invention of the 105 patent?

A. Not as you phrase your question, no.

Q. Did there come a time when you became responsible for development on behalf of Allcare?

A. I always empathize with lawyers for having to play 20 questions, so I am going to answer the – no I think is the direct answer to your question. Let me answer what I think you are asking.

Q. Mr. Shelton, you split hairs.

A. Pardon?

Q. You do split hairs.

A. I am trying to answer your question truthfully, Ms. Kernick. I am trying to offer information as opposed to just answer no and force you to ask another question, but I will be happy to answer no. No.

Q. What roles have you played with Allcare?

A. The one I was thinking of was when I – after selling Outtakes, it occurred to me that the play on words to the Clinton administration was it's the internet stupid and that maybe the way to implement this patent was to use the internet for the connectivity contemplated by the patent.

And so I basically spent at least a year working with both personally and with people that were internet experts to try to productize, to create

various products based upon what I believe were pieces of the system.

Q. Were you successful in getting partners in that regard?

A. No.

Q. Were you successful during the 1990 period – let me strike that.

Did you make any efforts in the 1990 period other than with Tandy Corporation in order to get development partners, you personally, Robert Shelton?

A. In the 1990 period, do you mean 1990 from January 1st to December 31st?

Q. Yes.

A. No.

Q. What were the efforts that you made, if any, related to either the Allcare card or the invention that ultimately was described in the 105 patent during that period of time, 1990?

A. I had mentioned Tandy, which I think I saw a document yesterday that was in approximately June of 1990 or 1991. I don't know. You have got the document. One or the other. I'll just rely on whatever the date is on that document. I don't recall whether it was 1990 or '91. Let me think for a second. I have lost the thought, and I don't recall what I was going to say.

Q. Have you, over the period of years since you have been involved with Allcare, and that would have to be since its inception in 1994, made any efforts in order to seek investment by third parties in Allcare.

A. Have I personally done that?

Q. Yes.

A. Yes.

Q. And what sort of efforts have those been?

A. I have attended meetings with several venture capital firms.

Q. Which venture capital firms?

A. I believe one of them was called D.H. Blair. Another one, I don't recall the name of, but it was in Ervine, California. It was a relationship of Mr. Plaskett's. I remember attending a meeting with them. And I made an effort to see if I could get in touch with the underwriters who were – appeared to be the parties that were going to be responsible for the Healtheon IPO, which I believe was Montgomery Securities.

Q. Were you able to obtain investment from any of those entities?

A. No.

Q. Why not?

A. Because in the period of time that we were asking, they were looking for something that would rush to market faster because they were trying to flip their stock into a quick IPO, and they did not respect

* * *

Q. Between William Conner and Desmond Cummings?

A. Desmond Cummings. But I have never seen it in this context, but I think I have seen this document somewhere.

Q. One last question. When you were talking about the individual lawyers that you approached on the strategy that you had for licensing, you also mentioned, in addition to the memo which you saw about Ray Niro, but Ed Goldstein. My note about what you said was what Ed Goldstein provided you was insight into litigation if licensing failed.

A. Yes.

Q. So you developed a litigation strategy in the event that licensing failed with Ed Goldstein?

A. At the time we entered into the agreement with Tobor & Goldstein, the contemplation was at that point that we would try one last try at licensing that Mr. Tobor would manage. And if that did not succeed, then we would turn it over to Mr. Goldstein of the same firm, and he would manage the litigation of it.

Q. Is that, in fact, what happened, that Mr. Tobor tried one last ditch at licensing, and that failed, and then you turned to litigation?

A. Well, when you say that failed, Mr. Tobor did negotiate with Epic license agreement absent litigation, from my perspective. And the rest of your comment would be correct. We then turned it over to Mr. Goldstein and proceeded down that path.

Q. All right. I want to mark one more exhibit.

A. Sure.

MS. KERNICK: And if madam court reporter could slap an exhibit sticker on Mr. Shelton's notes, and we will preserve those for the record.

A. Do you want to read them before you –

Q. (By Ms. Kernick) No.

(Exhibit 26 marked.)

Q. (By Ms. Kernick) I do have questions for you about Seaport Surveys, I suppose. I suppose I can get those in 30(b)(6) just in case you weren't the person who prepared the survey. Were you the person who prepared the survey, the Seaport Surveys?

A. I certainly participated in its preparation.

Q. Did you have extensive participation in its preparation?

A. Yes.

Q. And did you identify for Seaport Surveys the – any of the industries that you wanted Seaport Surveys to survey?

A. Yes.

Q. And did you identify any companies that you wanted Seaport Surveys to address the survey to?

A. Yes and no.

Q. What's that mean?

MR. HILL: Affirmative and negative.

MS. KENRICK: Indeed.

A. Well, yes. There were one or two companies that we asked – that I specifically asked Seaport Surveys to survey.

Q. (By Ms. Kernick) And those were?

A. We were trying to test the authenticity of the – well, those were – to answer your question, Tufts Health Plan is one, and the other ones that I think would fall in the answer to your question are the managed care companies in the state of Virginia were a second.

Q. What were you trying to test with that?

A. Well, like any reasonable survey document, I think there is a period where you try to make sure that you are getting the answers that you would expect. And so you try to provide the survey to companies where you think you know what the answers are, and so they provided – some of the companies that he selected to go to first included – one of those companies included Tufts.

And the answer that they came back with on some of their survey answers was different than what, based upon Charles Singer's knowledge of Tufts by virtue of being a member of that plan and living in the Boston area and listening to their radio ads, was different than what we perceived the answers would have been based upon his knowledge.

And so I specifically asked Seaport Surveys to rerun the survey as to Tufts to see whether we got just an anomalous answer or whether or not there was a problem with the survey document.

Q. Okay.

MS KERNICK: I have nothing further right now, but we will reserve completing the deposition until such time as we have the documents that are still outstanding. We've talked about most of them. It may be that after we get the documents, we don't need to follow up on the deposition or we can just roll it into a 30(b)(6). But I just want to keep that option open.

MR. HILL: Once we make the documents available, we will talk to you. If you want to question Mr. –

THE REPORTER: Do you want to go off the record?

MS. KERNICK: Yes, please.

MR. HILL: We will read and sign.

(End of Proceedings, 3:07 p.m.)

ALLCARE HEALTH MANAGEMENT SYSTEM, INC.

April 16, 2002

Via Federal Express

John S. Brouse, President, Chief Executive Officer
Robert C. Gray, Senior Vice President,
Chief Financial Officer
Gary R. Truitt, Esq., Senior Vice President,
General Counsel
Highmark, Inc.
Fifth Avenue Place
120 Fifth Avenue
Pittsburgh, PA 15222-3099

Re: U.S. Patent No. 5,301,105

Dear Messrs. Brouse, Gray and Truitt:

Allcare is the owner of U.S. Patent No. 5,301,105 (the "'105 patent"), a copy of which is enclosed. Allcare recently commissioned an independent research organization to conduct an analysis of Highmark's transaction processing systems for pre-authorizations, referrals to specialists and a number of other processes that are covered by the '105 patent. Below is a summary of some of the findings concerning your current systems:

Estimated percentage of healthcare procedures requiring pre-authorizations...	40%+
Estimated percentage of pre-authorizations that are being sent electronically...	60%+

Approximate date when this electronic processing option was first instituted...	1995
Are authorizations ever withheld pending utilization review?	Yes
Are authorizations ever withheld pending a second opinion?	Yes
Is payment prevented unless such pre-authorization has been obtained?	Yes
Estimated percentage of referrals requiring prior approval...	30%+
Estimated percentage of referral requests that are being sent electronically...	60%+
Approximate date when this electronic processing option was first instituted...	2001
Are referral approvals ever withheld pending utilization review?	Yes
Are referral approvals ever withheld pending a second opinion?	Yes
Is payment prevented unless such approval has been obtained?	Yes
Does the system automatically approve related ancillary services?	Yes
Does the system identify likely participants for disease management programs?	Yes

As you will note, among other things, many of the over 100 allowed claims of the '105 patent cover the processes involved in electronically processing pre-

authorizations and referrals. In this regard, I specifically direct your attention to Claims 1 and 16 of the '105 patent. Other allowed claims of the '105 patent that may be of interest to you include those directed to disease management and the provision of ancillary services, including Claims 2, 34 and 85 — as indicated above, each an additional process that Highmark's present system is reported to perform. Reading these claims against the information we have summarized above concerning your system and other corroborating information Allcare has acquired from publicly available sources, we believe it is appropriate that Highmark license the '105 patent from Allcare at this time.

Allcare has previously negotiated license agreements on a running royalty basis with firms at the leading edge of implementing state-of-the-art medical information systems. In addition, Allcare has previously litigated its rights under the '105 patent against several dozen companies, resulting in settlement agreements with a number of the nation's best-known companies in the fields of clinical processing systems, electronic medical records, health-related e-commerce and pharmacy benefits management.

Allcare is aware that Highmark has invested a considerable amount of time and money to implement the foregoing systems and to be among the first of the nation's payers to put such vitally needed capabilities in place. Rather than penalize your firm for implementing the system designed and patented by Dr. Cummings and assigned to Allcare, we would like to offer you an opportunity to secure a license under the '105 patent on a basis that will

minimize your associated cost and that includes a favored-nations provision for your field of use that will assure you that such license with Highmark will be at least as economically advantageous as any running royalty-based license Allcare subsequently concludes with any of your competitors.

I am enclosing a draft of the license agreement that Allcare offers to conclude with Highmark, Inc. and its subsidiaries[1] under the '105 patent. You will note that the payments under this agreement are structured on the basis of a running royalty based on 8¢ or less per member per month, payable annually in advance, through the expiry of the '105 patent in 2011. Alternatively, if Highmark would prefer to pay Allcare a one-time, lump sum payment in lieu of this running royalty, we would be willing to consider discounting the forecast sum of these future payments to reflect a reasonable cost of capital.

I encourage you to carefully review the enclosures and confer with an experienced patent counsel, whereupon it is my hope you will seriously consider the foregoing offer to license Highmark and its

---

[1] Highmark Blue Cross Blue Shield; Pennsylvania Blue Shield; Mountain State Blue Cross Blue Shield; Keystone Health Plan West; Keystone Health Plan Central; HealthGuard; Lifestyle Advantage; Gateway Health Plan; United Concordia; Clarity Vision; Davis Vision; Highmark Broker Services Company, Inc.; Highmark Casualty Insurance Company; Highmark Healthcare Services, Inc.; Highmark Life & Casualty Group; Highmark Services Company; Veritus Medicare Services; HGS Administrators; Insurer Physician Services Organization Inc.; Alliance Ventures; The Highmark Foundation and The Health Education Center.

subsidiaries under the '105 patent, I will call you within the next week to see if you are interested in holding a meeting to discuss this offer and, if so, to arrange a mutually acceptable date and location for such a meeting to take place.

Please let me know if you or an outside patent counsel on your behalf has any questions concerning this letter or its enclosures during the interim. We look forward to speaking with you.

Very truly yours,

/s/ Robert H. Shelton

Robert H. Shelton

Vice President, Licensing

Enclosures

cc: Thomas G. Plaskett, Chairman
W. Halden Conner, President
Steve G. Hill, Esq., Hill & Kertscher, LLP
V. Bryan Medlock Jr., Esq.,
Sidley Austin Brown & Wood, LLP

HILL, KERTSCHER & PIXLEY, LLP

December 11, 2002

Via Facsimile and U.S. Mail

Frederick H. Colen, Esq.
Cynthia E. Kernick, Esq.
Reed Smith
435 6th Avenue
Pittsburgh, Pennsylvania 15219

Re: Allcare -- Highmark

Dear Fred and Cynthia:

For several months we have addressed with each other the merits of the various issues relating to the enforcement of the '105 patent as it pertains to the systems and methods operated by Highmark. As you know, these discussions have at times revolved around the ongoing litigation against Trigon, which now appears to be headed for trial in February. In that case, we have been in litigation for half a year, have produced nearly 200,000 pages worth of documents, have reviewed an additional 75,000 pages of documents produced by Trigon. Seventeen depositions have been taken in the case. Eleven different computer applications have been inspected. We have produced five expert reports on issues relating to patent infringement and reasonable royalty, and expect to produce additional reports in rebuttal to issues relating to validity and enforceability. We expect at least four expert reports from Trigon. When all is said and done, we firmly expect that Trigon will have expended in excess of two million dollars in legal fees alone associated with the trial of this case. And that is on the fast track.

Based on the information that is already in our possession associated with Highmark, we believe that we would be seeking substantial damages in any case brought against Highmark.

Allcare has solicited my input regarding whether we might be able to avoid repeating this process with Highmark at the conclusion of the Trigon case, and whether a business resolution is feasible given the economics and risks at hand. As a result of our discussions regarding this matter, Allcare has authorized me to make the following licensing offer to Highmark:

a. Allcare will grant Highmark a fully paid up, non-exclusive license and covenant not to sue that shall apply to Highmark and all affiliates and/or subsidiaries that it controls;

b. Highmark will make a one-time license payment of $3.75 million dollars;

c. The lump sum payment will be made to a mutually agreeable third party escrow agent;

c. In the event the patent is adjudged to be unenforceable due to inequitable conduct, then the escrow agent shall return the entirety of the license payment to Highmark;

e. Otherwise, upon judgment of the District Court proceedings in the Trigon case relating to the enforceability of the '105 patent, the escrow agent will provide the lump-sum fee to Allcare.

We would appreciate it if you would present this settlement opportunity to Highmark. As you are aware, the pre-trial conference in the Trigon matter will be held on January 16, 2003. Accordingly, unless earlier accepted in writing, this offer shall

automatically expire on Thursday, January 9, 2003, or at such time as the Court rules on the enforceability of the '105 patent, whichever is earlier. This constitutes a confidential offer to settle and compromise a disputed matter in an effort to avoid litigation, and shall not be admissible in any proceeding pursuant to FRE 408.

Thank you for your attention to the foregoing matter.

Sincerely yours,

/s/ Steven G. Hill

Steven G. Hill

SGH:akm

cc: Robert H. Shelton, Allcare
V. Bryan Medlock, Esq.,
Sidley Austin Brown & Wood LLP

HILL, KERTSCHER & WHARTON, LLP

November 15, 2006

VIA ELECTRONIC MAIL

Don W. Martens, Esq.
2040 Main Street, 14th Floor
Irvine, CA 92614

Re: Highmark, Inc. v. Allcare Health Management System, Inc.

Dear Mr. Martens:

Pursuant to your directions during the November 8, 2006 *Markman* hearing, we hereby enclose for your consideration a list of claim terms at issue and the constructions of said terms that are acceptable to Allcare. From Allcare's perspective, because of statements made in your pre-hearing memo to the parties, statements we made during the hearing, among other things, there may be multiple acceptable constructions. We have signified this by indicating "AND/OR" between the stated proposed constructions described in the enclosure.

Please note that, at this time, we have not included source material indicating whether any of the referenced acceptable constructions are based upon presentations during the course of the hearing, statements in briefs, statements in the intrinsic and/or extrinsic evidence and/or agreements reported in the joint statement on claim construction. If you need that information, we trust you will let us know. Also, please let us know if you would like to receive a list of our proposed constructions in Microsoft Word format.

Finally, so that the parties' positions are of record, would you please attach each parties' list to your Report and Recommendation to Judge Means?

Thank you for your attention to these matters. Do not hesitate to contact us if we can be of further assistance.

Sincerely,

/s/ Steven G. Hill

Steven G. Hill

Vice President, Licensing

SGH:lfs

Encl.

cc: Cynthia Kernick, Esq. (via e-mail)
Robert Kucler, Esq. (via e-mail)
Craig Florence, Esq. (via e-mail)
Daryl Burke, Esq.

ALLCARE'S LIST OF ACCEPTABLE CONSTRUCTIONS AS TO DISPUTED CLAIM ELEMENTS

Claims Where Limitation Appears	Claim Limitation	Acceptable Construction
1, 52, 53 (preamble)	"comprehensive health management system"	"The integrated interconnection and interaction of the patient, health care provider, bank or other financial institution, insurance company, utilization reviewer/case manager and employer so as to include within a single system each of the essential participants to provide patients with complete and comprehensive maintaining and restoration of

Claims Where Limitation Appears	Claim Limitation	Acceptable Construction
		health by the treatment and prevention of disease, especially by trained and licensed professionals, and payment therefore."
1(a)	"input means for entering data identifying each of a predetermined plurality of persons"	"a physician office terminal having a keyboard or card reader for entering identification data of the person being processed; including either a dumb terminal or a personal computer" AND/OR "a physician office terminal, such as a dumb

Claims Where Limitation Appears	Claim Limitation	Acceptable Construction
		terminal, personal computer or keyboard serially connected to a computer system"
1(a), 1(d), 52(a),52(c), 102(c)-(f)	"identifying"	"naming or recognizing or establishing the identity of (someone or something)"
1(a), 52(a), 102(a)	"each"	"being one of two or more considered individually"
1(a), 52(a), 102(a)	"predetermined plurality of persons"	"a group of two or more persons determined in advance"
1(b)	"interconnected"	"joined by a communication path" AND/OR "joined

Claims Where Limitation Appears	Claim Limitation	Acceptable Construction
		physically and electrically"
1(b), 1(d), 52(b), 52(c), 52(d), 102(c)	"utilization review"	"review of the medical necessity or efficiency or quality of patient care, prospectively, concurrently or retrospect-ively" AND/OR "review to determine whether care is medically necessary or appropriate, regardless of whether the review occurs prospectively, concurrently or retrospectively"
1(c), 52(d) and 102 (preamble)	"payment means"	"at least one computer specially programmed

Claims Where Limitation Appears	Claim Limitation	Acceptable Construction
		as a medical payment system to automate a check or provide for electronic funds transfer to satisfy proper claims for medical services"

Claims Where Limitation Appears	Claim Limitation	Acceptable Construction
1(d)	"means in communication with said input means responsive to input of data through said input means symbolic of symptoms of one of said predetermined plurality of persons for tentatively identifying a proposed mode of treatment"	a processor smart system transferring information to the input means and responding, answering or replying to the receipt of data symbolic of symptoms entered through the input means
1(d)	"responsive"	"responding, answering or replying"
1(d) and 52(c)	"data symbolic of symptoms"	"information expressed in a symbolic or representative manner pertaining to the evidence of disease or changes in the

Claims Where Limitation Appears	Claim Limitation	Acceptable Construction
		physical condition of a patient."
1(d) and 52(c)	"symbolic"	"of, or pertaining to, or expressed by means of a symbol or symbols"; *i.e.*, something that represents something else by association, resemblance, or convention."
1(d) and 52(c)	"symptom"	any evidence of disease or of a patient's condition" AND/OR "a noticeable change in a patient's condition indicative of some bodily or mental state."

Claims Where Limitation Appears	Claim Limitation	Acceptable Construction
1(d) and 52(c)	"tentatively identifying a proposed mode of treatment"	"provisionally (*i.e.*, non-finally) naming or recognizing a suggested method of treatment"
1(d) and 52(c)	"tentatively"	"non-finally, provisionally"
1(d) and 52(c)	"identifying"	"recognizing as being; establishing the identity of someone or something"
1(d) and 52(c)	"proposed mode of treatment"	"a suggested method of the application of remedies or therapies to a patient for a disease or injury"
1(d) and 52(c)	"treatment"	the application of remedies or therapies to a patient for a disease or

Claims Where Limitation Appears	Claim Limitation	Acceptable Construction
		injury
52(c)	"Entering Through Said Input Means Into Said Data Processor Data Symbolic of Patient Symptoms For Tentatively Identifying a Proposed Mode of Treatment ..."	"Introducing or inserting through the input means, properly construed, one or more items of information expressed in a symbolic or representative manner pertaining to the evidence of disease or changes in the physical condition of a patient with a view toward, as concerns or corresponding to, provisionally naming or recognizing a suggested method of the application of remedies or

Claims Where Limitation Appears	Claim Limitation	Acceptable Construction
		therapies to a patient for a disease or injury"
52(c)	"input means"	"a physician office terminal having a keyboard or card reader for entering identification data of the person being processed; including either a dumb terminal or a personal computer" <u>AND/OR</u> "a physician office terminal, such as a dumb terminal, personal computer or keyboard serially connected to a

Claims Where Limitation Appears	Claim Limitation	Acceptable Construction
		computer system"
52(c)	"data symbolic of patient symptoms"	"information expressed in a symbolic or representative manner pertaining to the evidence of disease or changes in the physical condition of a patient."
52(c)	"for"	(1) "with a view towards" AND/OR (2) "corresponding to" AND/OR (3) "used to indicate the object, aim, or the purpose of an action or activity"
52(c)	"tentatively identifying a	"provisionally (*i.e.*, non-

Claims Where Limitation Appears	Claim Limitation	Acceptable Construction
	proposed mode of treatment"	finally) naming or recognizing a suggested method of treatment"
53	"providing said ancillary service"	"giving, facilitating or arranging for the ancillary services, including by (a) an automated system, medical director or other suitable person facilitating an ancillary service by indicating that payment will be made for a particular ancillary service as an approved treatment protocol or as

Claims Where Limitation Appears	Claim Limitation	Acceptable Construction
		part of an approved treatment protocol, such that the service is available and affordable; or (b) a provider electronically communicating a request for an ancillary service (such as a referral to a medical specialist) using the computer system, such that the service is readied or prepared."
102 (preamble)	"integrated health care management system"	"a harmonious computer system for directing or administering health care which

Claims Where Limitation Appears	Claim Limitation	Acceptable Construction
		integrates (*i.e.*, puts various components together to form a harmonious computer system that includes) physicians, medical care facilities, patients, insurance companies and/or other health care payers, employers and banks and/or other financial institutions."
102(a)	"storing through said input means into said memory storage personal health profile data for each of a	"step of transmitting or depositing individual health profile data, properly construed as items of information

Claims Where Limitation Appears	Claim Limitation	Acceptable Construction
	predetermined plurality of persons"	found in a health profile such as a person's health history or physical exam results, through the physician's office terminal into the computer system's memory and making such information available for retrieval."
102(a)	"health profile data"	"items of information found in a health profile, such as a person's health history or physical exam results"
102(b)	"storing into said memory storage	"the step of transmitting or depositing

Claims Where Limitation Appears	Claim Limitation	Acceptable Construction
	symptoms and treatment data for each of a predetermined plurality of health profiles and problems"	symptoms and treatment information for health profiles, properly construed, and problems, into the computer's memory and making such information available for retrieval"
102(b)	"health profiles"	"summaries of health, such as a plurality of health histories or physical examination results"
102(b)-(d)	"storing in[to] said memory storage..."	"step of transmitting or depositing [something] into the computer system's memory and making such

Claims Where Limitation Appears	Claim Limitation	Acceptable Construction
		information available for retrieval."

IN THE UNITED STATES DISTRICT COURT
FOR THE NORTHERN DISTRICT OF TEXAS
FORT WORTH DIVISION
CIVIL ACTION NO. 4:03CV1384-Y

HIGHMARK, INC.

Plaintiff,

v.

ALLCARE HEALTH
MANAGEMENT SYSTEM, INC.

Defendant.

ALLCARE HEALTH MANAGEMENT SYSTEMS, INC.'S OBJECTIONS AND RESPONSES TO PLAINTIFF HIGHMARK, INC.'S FIRST SET OF INTERROGATORIES (NOS. 1.1-1.3)

TO PLAINTIFFS AND THEIR
ATTORNEYS OF RECORD:

PLEASE TAKE NOTICE that, pursuant to Rules 26, 33 and 34 of the Federal Rules of Civil Procedure, defendant Allcare Health Management System, Inc. ("Allcare" or "Defendant') serves upon plaintiff Highmark Inc. (herein, "Highmark" or "Plaintiff) these responses to Plaintiff's First Set of Jurisdictional Interrogatories.

GENERAL OBJECTIONS

Allcare objects to Plaintiff's interrogatories to the extent that they seek information protected from disclosure by the attorney-client privilege, and attorney work product doctrine. Nothing described

herein in response to any interrogatory shall be construed as a waiver of any privilege, or the privilege as it attaches to any subject matter.

Allcare objects to each Interrogatory or part thereof to the extent it seeks information that is neither relevant to the subject matter of this action nor reasonably calculated to lead to the discovery of admissible evidence.

Allcare has responded to each of the discovery requests in good faith and pursuant to its obligations under Rule 26. Should Allcare recognize as discovery continues that any responses herein are in need of clarification or additional elaboration for any reason, Allcare reserves the right to supplement these answers pursuant to Rule 260), and reserves the right to provide such supplementation by any means available to itself.

A majority of Plaintiff's interrogatories seek information that is of a confidential nature. Accordingly, Allcare has designated the entirety of its answers herein as "Confidential" in accordance with the protective order in this case, and the stipulation among the parties to protect each other's confidential information from disclosure except as needed for purposes of this litigation, and in accordance with the terms and conditions of the protective order.

Interrogatory No. 1.1:

Identify all investigations, searches, studies and/or reviews by you or anyone acting on your behalf at any time that sought to determine whether Highmark was infringing one or more claims of the '105 Patent, including the persons conducting same, all persons with knowledge of any facts supporting

Allcare's allegations that any Highmark system or process infringes the '105 Patent, the facts known by each such person, any conclusion(s) reached in any such investigation, searches, studies and/or review, and all documents and other evidence relating or referring thereto.

Response

Allcare objects to this interrogatory to the extent that it seeks to discover attorney-client or work product-protected information. Allcare also objects to this interrogatory to the extent that it seeks the discovery of information outside of the possession, custody or control of Allcare. Subject to and without waiving these objections, Allcare states that in July 2001, Robert Shelton, Allcare's Vice President of Licensing, contacted John Kumnick, the president of Seaport Surveys, Inc., an independent market research firm based in Portland, Maine (herein "Seaport"), to discuss the possibility of Seaport conducting a series of telephone interviews on Allcare's behalf with representatives of various managed care companies to identify those organizations that were the leaders in the electronic processing of authorizations and referral requests, and to ascertain the respondent firms' capabilities or plans to connect to providers and process authorizations and referrals electronically. Pursuant to these discussions, a form of survey instrument was developed and a list of approximately 1,250 HMO and PPO companies was purchased by Seaport from American Medical Information ("AMI"). Using the AMI list, these telephone interviews began during August 2001; and between August 17, 2001 and June 26, 2002, Seaport completed a total of

approximately 328 telephone interviews nationwide of the representatives of such firms including Highmark, whose Vice President for Provider Relations, Augusta Kairys, was interviewed on or about February 7, 2002.

As was Allcare's standard practice at the time when a firm's responses suggested the possibility that they were infringing our rights, after Allcare received the responses to the Seaport questionnaire provided by Ms. Kairys, Mr. Shelton began to conduct additional research, principally using the Internet, in an effort to corroborate and/or disconfirm the impression provided by the survey responses. In the case of Highmark, following review of Ms. Kairys' responses to the Seaport questionnaire, Mr. Shelton undertook an independent investigation of Highmark's information technology systems using various publicly-available sources including review of the Highmark Web site, the NaviMedix web site, the Accenture web site and other reference materials available on the World Wide Web concerning the use, nature and/or development of Highmark's capabilities. The combination of the responses provided by Ms. Kairys to the Seaport survey and the results of this follow-up research conducted by Mr. Shelton over the months that followed, resulted in Allcare's decision to send a letter to John S. Brouse, Robert C. Gray and Gary R. Truitt, respectively Highmark's CEO, CFO and General Counsel, on or about April 16, 2002. A copy of this letter (together with related follow-up correspondence), the Seaport questionnaire indicating the responses given by Ms. Kairys and the various documents secured during the course of this follow-up investigation through public information sources, has been provided to

Highmark in Allcare's Initial Disclosures in this case (see AHM-HIGH 0001 to 1034).

As shown by such materials and for the reasons discussed therein, Allcare concluded that Highmark was infringing various allowed claims of the '105 patent. Accordingly, over the approximately 10 months following the April 16, 2002 letter, Allcare and Highmark and their respective representatives held a number of discussions relating to such allegations of infringement raised by Allcare's initial correspondence to Highmark. These discussions included one face-to-face meeting, on or about October 14, 2002 in Atlanta, Georgia at the offices of Allcare counsel, Steven G. Hill. During the course of these discussions and other communications between the parties and/or counsel for the parties, Highmark stated its positions as follows:

- Highmark did not infringe the '105 patent because the '105 patent claims required a diagnostic smart system, which system was not present in Highmark's system for managing health care; and
- The '105 patent is not enforceable given the contents of the one-page Bank One Medical Payment System flier (herein, the "Bank One document"), which was not disclosed to the U.S. Patent and Trademark Office during prosecution of the '105 patent.

Mr. Shelton continued his investigation after Highmark expressed its reservations over infringement based upon these expressed objections. Mr. Shelton saw references in the literature that caused him to believe that Highmark used a set of rules embedded in programmed logic of the system

that it implemented between 1995 and 2001 to govern the approval, denial or pending of medical authorizations. He thus formed the opinion that the Highmark system was a "smart system" as described in the '105 patent for approving, pending or denying authorization of medical procedures. Moreover, given Mr. Shelton's personal familiarity with all of the principals who had been involved in the conception and prosecution of the '105 patent, he had first hand knowledge and belief that none of them would have sought, nor did, seek to intentionally withhold from the U.S. Patent and Trademark Office any pertinent information concerning the application that matured into the '105 patent.

It also bears mentioning that while this investigation was ongoing, Allcare was enforcing the '105 patent against Trigon Healthcare, Inc. and its subsidiaries, including Trigon Blue Cross Blue Shield (herein "Trigon" and "*Trigon* litigation"). In the Trigon litigation, Allcare took the position that a diagnostic smart system was not a limitation of certain of the broader claims of the '105 patent (*e.g.*, claims 1, 4, 52 and 55) but rather covered by a number of the patent's more narrow claims (e.g., claims 13, 14 and 15), and Allcare defended against Trigon's allegations that the '105 patent was unenforceable in view of the Bank One document. Ultimately, Allcare prevailed concerning both of these issues. Allcare has provided all of these materials to Highmark in this case.

Despite repeated requests by Allcare for Highmark to provide Allcare with a number of relevant documents concerning its system, Highmark and its agents refused to do so, thereby forcing

Allcare to rely exclusively on publicly available information. After Highmark initiated this action against Allcare, Mr. Shelton once again undertook an investigation of Highmark's information technology by reviewing publicly available the Highmark web site, the NaviMedix web site, the Accenture web site and other reference materials available on the World Wide Web. To the best of Allcare's knowledge, all of these materials have been provided to Highmark during the course of discovery in this matter, but to the extent they have not already been produced, pursuant to Rule 33(c) of the Federal Rules of Civil Procedure, Allcare will produce any non-privileged, non-objectionable documents for inspection and copying.

In addition to the foregoing discussion, and as it pertains to any persons with knowledge of any facts supporting Allcare's allegations that any Highmark system or process infringes the '105 Patent, Allcare incorporates by reference the contents of its Initial Disclosures in this case, as if fully restated herein.

Interrogatory No. 1.2:

For each claim of the '105 Patent asserted by Allcare, identify every secondary consideration of non-obviousness that Allcare contends supports the validity of the claim and the factual basis of each identified secondary consideration.

Response:

Allcare objects to this interrogatory to the extent that it seeks to discover attorney-client or work product-protected information. Allcare also objects to this interrogatory to the extent that it seeks the discovery of information outside of the possession, custody or information except in conjunction with the

schedule for claim construction and infringement disclosures.

Subject to and without waiving these objections, Allcare states that, like its licensees Trigon, Harvard Pilgrim and Tufts (as to design but not yet as to implementation), Highmark has designed a comprehensive healthcare management system, which includes computer input terminals at the location of Highmark network hospitals and physician's offices, databases including (i) common terminology for medical procedures, including procedures requiring utilization review, and (ii) claims data, plus a rules-based platform for providing medical authorizations/referrals and "pends" or denials of requested authorizations/referrals, a rules-based claims processing and payment system for determining whether a claim should be paid and how to pay the claim. Allcare has previously identified a number of claims asserted. Allcare is aware of its duty to seasonably supplement this disclosure of claims asserted and will do so in accordance with the scheduling order in this case to provide a claim chart that completely shows how each element of each allegedly infringed claim corresponds to each allegedly infringing Highmark product or process; whether and to what extent each such element finds literal or equivalent correspondence in the Highmark product or process.

Respectfully submitted,

/s/ Steven G. Hill
Steven G. Hill

497

HILL KERTSCHER &
WHARTON, LLP
3350 Riverwood Parkway,
Suite 800
Atlanta, GA 30339

DECLARATION OF ROBERT H. SHELTON

I, Robert H. Shelton, declare under oath and under penalty of perjury pursuant to 28 U.S.C. 1746 as follows:

1. My name is Robert H. Shelton. I am over 21 years old, and am fully competent to make this declaration. I have personal knowledge of the matters set forth herein and know them to be true and correct.

2. I am a Director and the Vice President, Licensing, for Allcare Health Management System, Inc. ("Allcare") and make this declaration in response to Highmark's proposed findings of fact in support of its motion seeking to have this case declared "exceptional" and to award attorney's fees to Highmark on this basis.

3. As part of my duties with Allcare, and from at least 1999 through 2004, I was responsible for identifying potential infringers and performing sufficient due diligence to document, as nearly as possible, a *prima facie* case of infringement of U.S. Patent 5,301,105 (the '105 patent) based on publicly available information.

4. Generally speaking, this work involved my use of the Internet to review various company websites; newspaper, magazine and trade journal articles; and various presentations made by company representatives regarding electronic processing of authorizations and referral requests involving the connection of providers and payers. In order to help me select the firms on which to focus such research, I arranged for Allcare to engage and subsequently oversaw the work performed by an independent contractor, a market research firm named Seaport

Surveys, Inc., who over an approximately 10-month period, between August 17, 2001 and June 26, 2002, conducted telephone interviews with knowledgeable persons within a total of 328 managed care organizations, including Highmark and 21 other firms located in the State of Pennsylvania.

5. In its Proposed Finding of Facts (PFOF), #196, Highmark alleges that Allcare made misrepresentations to Judge Lancaster of the Western District of Pennsylvania about the nature of Allcare's relationship with Seaport Surveys. Highmark alleges that Allcare was wrong to represent to Judge Lancaster in its Response to Highmark's Combined Motion for Expedited and Limited Discovery and Request for Extension of Time to File Opposition to Allcare's Motion to Dismiss for Lack of Personal Jurisdiction, that "Allcare did not view the survey conducted by Seaport Surveys as having been a contact [with Pennsylvania] because Allcare did not control the manner in which Seaport Surveys, an independent contractor, went about completing the surveys" (PFOF #189, referring to APP 459-460, emphasis added) and that "Allcare did not control how Seaport Surveys carried out its surveys, nor did it dictate what companies Seaport opted to call upon." (PFOF #190, referring to APP 466, emphasis added)

6. Paragraphs 7-16, below, detail all of Allcare's contacts with Seaport Surveys. As these paragraphs show, Allcare never had any input whatsoever in how the surveys were completed. We did not know who from Seaport would conduct the interview, or who they would interview. We did not select the companies this person would call, or the individuals

in these firms with whom they would eventually speak. We did not participate in any way in the call itself, or in completing the form recording their answers; and indeed did not even know about the call or any of the responses given by the respondent until days, if not weeks, after the interview had already taken place. For these reasons, I believe that my testimony before Judge Lancaster was truthful, and that neither I nor Allcare misrepresented any facts to Judge Lancaster relating to Seaport Surveys.

7. I initially contacted John Kumnick, the President of Seaport Surveys, Inc. (Seaport) in July 2001 concerning the prospect of Seaport conducting these telephone interviews. To the best of my recollection, Mr. Kumnick and I discussed the general range of costs, the experience of the firm and qualifications of the individuals who would be conducting the interviews, the length of time he anticipated that the work would require, and how Mr. Kumnick would recommend that the interview questionnaire and the list of firms to be contacted should be developed. As I recall, Mr. Kumnick indicated that in order to provide a reliable estimate of costs, he would need to know more about the length of the questionnaire and the complexity of the topics we generally envisioned being discussed during the telephone interviews. We also agreed that it would be a good idea to conduct a dozen or so test interviews before embarking on a more extensive project.

8. Accordingly, on July 27, 2001, I sent an email message to Mr. Kumnick in follow-up to this call, to which I attached a draft of a survey questionnaire

and a proposed methodology for identifying respondents, and requesting from him an estimate of the costs and timing of Seaport conducting an initial test involving between 10 and 20 interviews,

9. On July 31, 2001, Mr. Kumnick responded by email with a proposal for conducting such initial interviews on one of two assumed bases. Under the first option, he proposed that Allcare provide Seaport Surveys with a contact list, including the names, titles and telephone numbers for the individuals to be interviewed at each company. Under a second alternative, Mr. Kumnick proposed that Seaport Surveys begin with a main number for each company and be expected to locate the appropriate respondent. The proposed cost to Allcare of the two methodologies was, respectively, $45 and $60 per completed interview.

10. On August 14, 2001, I authorized Seaport to proceed based on the more costly option, wherein as part of its scope of work, Seaport would locate the appropriate respondent. In the same email message, I attached a list of 50 firms from which I asked that Seaport initially complete a total of 20 surveys. Because Seaport would have the responsibility for identifying the appropriate respondent within each firm, Mr. Kumnick requested that we advise him the titles or job descriptions of the persons who, in our experience, would most likely be able to respond to the questions. Accordingly, on August 15, 2001, I sent another email message to Mr. Kumnick with a list of the likely job titles for these persons.

11. Approximately three weeks later, on September 6, 2001, Mr. Kumnick informed me that Seaport had completed a total of 21 interviews, and

said that he would be forwarding the completed questionnaires to us the following day. As I recall, we also discussed his impressions of the cost for conducting a broader national survey, and who should develop a list of firms to be contacted. I asked that Seaport locate a list of firms for such further interviews.

12. On September 17, 2001, Mr. Kumnick informed me that Seaport had contacted a number of list providers for purchasing a list of managed care companies that might include more specific contacts than Seaport had used during its conduct of the initial test interviews. The following day, he sent me a follow-up email message in which he recommended purchasing from American Medical Information (AMI) a list of between 1,200 and 1,300 HMO/PPO companies, including MIS and Medical Records management contacts.

13. I subsequently approved the purchase of the AMI list by Seaport; and on October 12, 2001, Mr. Kumnick sent me an email message in which he indicated he had received the complete AMI list and was now in a position to commence calling once authorized by Allcare to do so.

14. On October 15, 2001, I sent Mr. Kumnick an email message including a revised survey instrument and a list of 11 payers within the Commonwealth of Virginia with whom to test it, and authorized Seaport Surveys to complete half a dozen interviews with these companies, After reviewing these results, on November 26, 2001, I informed Mr. Kumnick that after making several minor changes in the questionnaire, Allcare planned to authorize the

conduct by Seaport of between 50 and 100 surveys per month for "the next several months."

15. On December 1, 2001, I sent Mr. Kumnick an email message with a list of supplemental questions to be presented in follow-up interviews with respondents to the earlier test surveys and a blank copy of the questionnaire that I understood would be used if we authorized him to proceed with such work. On December 11, 2001, Mr. Kumnick responded with comments on these materials and a request for a modest increase in price per completed interview based on the length of the final questionnaire.

16. On January 8, 2002, Mr. Kumnick sent me an email message in which he included a merged copy of the AMI list that Seaport planned to use as the basis for initiating its search for qualified respondents to participate in such interviews. And over the next five to six months, Seaport continued to forward Allcare approximately 50 completed interviews each month based on using the agreed screening methodology to locate the correct person from the AMI list. This work continued through late June, and according to my recollection, the last interview conducted by Seaport Surveys was completed on June 26, 2002.

17. In PFOF #1, Highmark alleges "This action was brought in response to repeated demands by Allcare that Highmark infringed the '105 Patent, that a license was required to avoid suit by Allcare and continued threats by Allcare that it would institute litigation if Highmark did not buy a license under the '105 Patent." From my perspective, this statement is not factual.

18. It is true that the action was brought by Highmark. But Highmark wrongly characterizes the communications that pre-date its decision to file the Declaratory Judgment action against Allcare that commenced this case. While Allcare's contacts encouraged Highmark to take a license, it is wrong to suggest that the alternative was threats of litigation. In my letter of March 4, 2003 (AHM-HIGH 145 — AHM-HIGH 147), I clearly state the alternative as a request that Highmark provide factual evidence that the basis upon which we conclude that there is infringing activity of the '105 patent is incorrect. Indeed, the detailed record of pre-filing contacts with Highmark attached hereto as **Exhibit A** shows that Allcare and its counsel diligently sought to avoid litigation and to conclude an amicable arrangement.

19. Moreover, Allcare has made similar contacts with a number of firms in which, rather than file DJ actions, the recipients entered into principled discussions and/or permitted Allcare to review their systems in an earnest effort to arrive at a principled outcome, In each such case, these have resulted in Allcare and that party reaching an amicable accord, often without recourse to litigation. I provide the following three examples:

(a) On April 16, 2002, Allcare wrote an almost identical letter to Lakewood Health Plan, Inc., as it wrote to Highmark on that date. But on April 7, 2003, Lakewood permitted me to make a site inspection concerning Lakewood's technology, to speak with two of its officers, and to consider the factual evidence they provided me about how its systems operated. At the conclusion of that meeting, on April 14, 2003, Allcare sent a letter withdrawing

our licensing demand and a message thanking them for the "candor and openness that permitted us to resolve this matter amicably."

(b) On April 16, 2002, Allcare wrote an almost identical letter to Tufts Health Plan as it wrote to Highmark on that date. But on May 23, 2003, Tufts and its counsel held the first of several meetings with Allcare and its counsel, in which Tufts provided factual evidence concerning how its system operated. On July 21, 2003, I informed Tufts officials and their counsel that we had determined based on these discussions that a license was not required unless and until they completed their planned system upgrades; and they responded with interest in negotiating a license that would permit them freedom of action in this regard. At the conclusion of an amicable negotiation, we concluded a license with Tufts on January 26, 2004.

* * *

20. Even after this declaratory judgment action was commenced by Highmark, Allcare has sought to arrive at a reasonable settlement, but Highmark has been unwilling to accept anything of the sort. At an early point in this case, on June 29, 2004, Allcare's counsel communicated a written lump sum settlement offer to Highmark of $778,292.60, a copy of which is attached hereto as **Exhibit B**. The fact that the offer was made by Allcare — and the fact that Highmark elected not to respond with a counter-offer of any kind is certainly telling in light of Highmark's claim that Allcare has been unreasonable and therefore should now be required to pay for Highmark's legal fees.

I declare under penalty of perjury that the foregoing is true and correct.

Executed this 6th day of January, 2009

/s/ Robert H. Shelton
Robert H. Shelton

EXHIBIT A

TIMELINE OF CONTACTS BETWEEN ALLCARE, HIGHMARK AND THEIR RESPECTIVE REPRESENTATIVES (APRIL 16, 2002 THROUGH APRIL 3, 2003)

Type*	Date	From	Summary/ Description
I	***04-16-2002***	***Letter***	***Allcare sent a licensing letter to John Brouse, Highmark's President and CEO, with copies to Robert Gray, Highmark's Sr. VP and CFO, and Gary***

---

* Those contacts into Pennsylvania initiated by Allcare and/or its representatives (*i.e.*, to warn of possible infringement, suggest license agreement terms, solicit negotiation, etc.) are designated by an "I" and appear in ***bold italics*** within the timeline. All other communications, including any contacts initiated by Highmark and/or its representatives, and those contacts which are responsive to specific requests (*i.e.*, for information, clarification, documents, etc) made by Highmark and/or its agents, appear in a regular type font.

Type*	Date	From	Summary/ Description
			Truitt, Highmark's Sr. VP and General Counsel The letter enclosed a copy of the '105 patent, an allegation of Highmark's infringement of numerous claims, set forth with particularity several such claims, and proposed a form of running royalty license agreement as the basis for negotiating a license.

Type*	Date	From	Summary/ Description
	04-23-2002	Telephone Call	Anne Shearon, Highmark's Assistant General Counsel, called Robert Shelton, Allcare's VP Licensing, to acknowledge having received the April 16, 2002 letter. Ms. Shearon indicated Highmark was sending the letter to its outside counsel and asked that Allcare give Highmark "a couple of weeks" for

Type*	Date	From	Summary/ Description
			its counsel to conduct this review. Mr. Shelton agreed.
I	*04-24-2002*	*Letter*	***Mr. Shelton sent a follow-up letter to Ms. Shearon confirming their conversation of April 23, 2003 and "a couple of weeks" as constituting the timing of Highmark's commitment to follow-up.***
I	*05-08-2002*	*Telephone Call*	***Mr. Shelton left a message for Ms. Shearon in***

Type*	Date	From	Summary/ Description
			follow up to the conversation on April 23, 2002. In the message, Mr. Shelton explained he was interested in learning how things were progressing with Highmark's review of the materials forwarded on April 16, 2002, if they had questions Allcare or its counsel might be able to answer, and if they'd

Type*	Date	From	Summary/ Description
			gotten far enough along to talk about possibly scheduling a meeting.
	05-28-2002	Letter	Allcare received a letter, dated May 23, 2002, from Ms. Shearon, indicating that it was taking Highmark longer than expected to identify and meet with the appropriate staff to investigate Allcare's allegations in its letter of April 16, 2002. The letter asks

Type*	Date	From	Summary/ Description
			for Allcare's "continued patience for a few more weeks..."
I	*05-29-2002*	*Letter*	***Mr. Shelton sent a response letter, acknowl-edging Highmark will take "through the last week of June" to complete its review, and encouragin g them to contact Allcare's patent counsel, Steven Hill (at his office in Atlanta, Georgia), should they***

Type*	Date	From	Summary/ Description
			have any questions.
	07-01-2002	Telephone Call	Mr. Hill received a call from Cindy Kernick and Fred Colen, each partners of the Reed Smith law firm in Pittsburgh, indicating that they represent Highmark and seeking to set up a telephone conference call on July 2, 2002 to discuss a number of questions they have concerning the '105 patent.

Type*	Date	From	Summary/ Description
	07-02-2002	Telephone Call	Mr. Hill, Mr. Colen and Ms. Kernick held a 90-minute call to discuss the '105 patent and for Mr. Hill to respond to a series of questions they raised about its applicability to Highmark.
	07-09-2002	Email	Mr. Hill sent an email message to Ms. Kernick with certain documents she requested during the July 2,

Type*	Date	From	Summary/ Description
			2002 call.
	07-24-2002	Letter	Mr. Hill sent a letter to Mr. Colen and Ms. Kernick summarizing previous materials, addressing their questions concerning "smart system" requirements and indicating that the ball was in their court to state if their client is interested in making a counter-offer to Allcare's licensing proposal of

Type*	Date	From	Summary/ Description
			April 16, 2002.
	07-30-2002	Email	Mr. Hill sent an email message to Ms. Kernick acknowledging several voice mail messages left for him by her since Allcare's letter of July 24, 2002, and proposing a telephone conference on Friday, August 2, 2002, to respond to her questions.
	08-02-2002	Telephone Call	Mr. Hill spoke with Mr. Colen

Type*	Date	From	Summary/ Description
			and Ms. Kernick for approximately 90 minutes. In follow-up, he agreed to forward several exhibits they asked to review as they continued to counsel Highmark on this matter.
	08-13-2002	Email	Mr. Hill forwarded to Ms. Kernick a copy of an August 7, 2002 declaration of a witness, Gerald Kurtyka, about

Type*	Date	From	Summary/ Description
			which she had raised a number of questions.
	08-14-2002	Letter	Mr. Hill sent Mr. Colen and Ms. Kernick a letter responding to their request to receive a copy of the Claims Chart asserted by Allcare in the patent litigation between Allcare and Trigon Blue Cross Blue Shield (the "Claims Chart"), by saying he would provide

Type*	Date	From	Summary/ Description
			them with a copy once proffered in that case.
	08-16-2002	Letter	Mr. Hill sent Ms. Kernick via Federal Express a redacted copy of the Claims Chart proffered by Allcare in the Trigon case.
	08-26-2002	Telephone Call	Mr. Hill, Mr. Colen and Ms. Kernick held a conference call and suggested the lawyers and their clients hold a face-to-face

Type*	Date	From	Summary/ Description
			meeting in Atlanta in late September to get a first-hand feeling for things.
	08-28-2002	Letter	Mr. Hill received a letter from Ms. Kernick suggesting the meeting in Atlanta with Highmark's management be held on October 1, 8 or 9, 2002.
	10-14-2002	Meeting	Mr. Hill, Mr. Shelton, Ms. Shearon, Mr. Colen and Ms. Kernick

Type*	Date	From	Summary/ Description
			met for several hours at the Hill, Kertscher & Pixley offices in Atlanta.
	11-19-2002	Email	Ms. Kernick emailed Mr. Hill, requesting a copy of the Joint Claims Statement in the Trigon litigation.
	12-04-2002	Email	Mr. Hill forwarded a redacted copy of the Joint Claims Statement to Ms. Kernick, in response to her

Type	Date	From	Summary/ Description
			request.
I	*12-11-2002*	*Letter*	***Mr. Hill sent a written proposal letter to Mr. Colen and Ms. Kernick offering Highmark an opportunity to enter into a license agreement on amended terms to those originally proposed by Allcare on April 16, 2002.***
	01-09-2003	Letter	Ms. Kernick wrote a letter declining

Type*	Date	From	Summary/ Description
			Allcare's offer of December 11, 2002, which she hand-delivered to Mr. Shelton on January 10, 2003 during the *Allcare v. Trigon* hearing in Alexandria, Virginia, which she attended.
	01-14-2003	Letter	Ms. Kernick wrote Mr. Hill, with a copy to Mark Ungerman, Trigon's outside counsel in the *Allcare v. Trigon* matter, to request

Type*	Date	From	Summary/ Description
			copies of a number of the sealed documents in that case.
I	*03-04-2003*	*Letter*	***After settling the Allcare v. Trigon litigation on February 25, 2003, Mr. Shelton sent a letter to Ms. Shearon, communicating the results from the case versus Trigon, providing copies of a number of Orders and Memoranda issued by the Court,***

Type*	Date	From	Summary/ Description
			forwarding a third revised licensing proposal and reiterating his earlier invitation for face-to-face negotiations.
	03-07-2003	Message Exchange	Mr. Hill traded voice mail messages with Mr. Colen. Both indicated a desire to speak, and Mr. Colen confirmed in his reply message that Reed Smith was endeavoring to get with their

Type*	Date	From	Summary/ Description
			client to ascertain their desire as to possible next steps.
	03-17-2003	Telephone Call	Mr. Hill received a call from Ms. Kernick, who told him that Ms. Shearon had been traveling and that they have yet to meet with her. Ms. Kernick indicated to Mr. Hill that they had scheduled a meeting with Ms. Shearon on March 19,

Type*	Date	From	Summary/ Description
			2002, and that she will call back on March 20 or 21, to inform him whether Highmark has any interest in meeting at this time.
	03-18-2003	Telephone Call	Mr. Hill received a follow-up call from Ms. Kernick to inform him that they had met with Ms. Shearon, who'd decided that she was not comfortable doing anything until all of

Type*	Date	From	Summary/ Description
			the information concerning the matter had been communicated directly by Reed Smith to Highmark's General Counsel.
	03-21-2003	Message	Mr. Hill received a voice message from Ms. Kernick, indicating that the session with Highmark's General Counsel had taken place on Friday March 21, 2003, and that she wanted to

Type*	Date	From	Summary/ Description
			follow-up with a discussion concerning it.
	03-24-2003	Telephone Call	Mr. Hill and Ms. Kernick held a lengthy telephone conversation in which she told Mr. Hill that the meeting with Highmark's General Counsel had gone well, and that they were planning to hold a follow-up meeting with Highmark's CEO.

Type*	Date	From	Summary/ Description
	03-___-2003	Letter	In response to Ms. Kernick's request to receive a copy of the Allcare-Trigon settlement agreement, Mr. Hill wrote Ms. Kernick to assure her that Allcare is prepared to do whatever Highmark deems would benefit them to unlock the gag order imposed by Trigon on that agreement and its terms.

Type*	Date	From	Summary/ Description
	03-27-2003	Telephone Call	Mr. Hill received a call from Ms. Kernick, thanking him for his letter regarding assisting Highmark to get Trigon to inform them the terms of the settlement with Allcare. She asked if he would provide copies of the Epic, PCD and HIT license agreements .
	04-01-2003	Message Exchange	Mr. Hill traded voice mail

Type[4]	Date	From	Summary/ Description
			messages with Ms. Kernick.
	04-03-2003	Telephone Call	Mr. Hill received a call from Ms. Kernick, who asked whether Allcare would assure Highmark that if settlement negotiations were not successful, any litigation would take place in the U.S. District Court for the Western District of PA. Mr. Hill told Ms.

Type*	Date	From	Summary/ Description
			Kernick he would have to discuss this with his client but that he would recommend against Allcare doing this. While they were still on the call, Ms. Kernick informed Mr. Hill that Highmark had just filed this action seeking declaratory judgment against Allcare.

DECLARATION OF STEVEN G. HILL

I, Steven G. Hill, declare under penalty of perjury pursuant to 28 U.S.C, 1746 that the following statements are true and correct:

1. My name is Steven G. Hill. I am over twenty-one years of age and am competent to testify in this matter. I am lead counsel for Allcare Health Management System, Inc. ("Allcare"). I am an attorney licensed in Georgia. Since 1994, my practice has included substantial intellectual property litigation in federal courts around the country. During that time, I have been recognized by my peers with several awards, including recognition on at least three separate occasions by *Atlanta Magazine and Law & Politics* as a Georgia "Super Lawyer" in the field of intellectual property litigation. Since 1997, a major component of my practice has been federal patent litigation. In that time, I have filed claims or counterclaims of patent infringement against approximately 40 different parties in various federal courts. My normal pre-filing investigation consists of taking one or more claims of each patent-in-suit, arriving at a projected claim construction of each of the material elements of said claim(s), and then comparing the claim elements as construed with the device or method accused of infringement to make sure a reasonable factual basis exists for believing that each element is present such that there is a reasonable basis to believe that my client may succeed on its claim of infringement. In some cases, due to the unavailability of the device in question, it may be necessary to request access to materials from the manufacturer in order to confirm or reject that the device operates in a manner

consistent with the patent claim(s). Of all the times that I have filed claims and counterclaims of patent infringement, this is only the second occasion where a party has attacked the sufficiency of my pre-filing investigation to the Court. The first occasion was *Arrival Star, Inc. v. Descartes*, in which Judge Sweet found that I had conducted an appropriate pre-filing investigation prior to filing suit. *Arrival Star, Inc. v. Descartes Sys. Group, Inc.*, 2004 U.S. Dist. LEXIS 22433, **28-37 (S.D.N.Y. Nov. 5, 2004).

2. I make this declaration in response to Highmark's proposed findings of fact in support of its motion seeking to have this case declared "exceptional" and to award attorney's fees to Highmark. In overview, for the Court's convenience, here is a table which correlates which of the numbered paragraphs of my declaration and the accompanying declaration of Robert Shelton respond to Highmark's numbers proposed findings of fact:

Highmark Proposed Findings of Fact		**Allcare Response**
¶¶ 10-21 -	Allcare's "shifting positions" on claim construction	Hill Dec., ¶¶ 46-66
¶¶ 22-28 -	Recognition of the diagnostic smart system	Hill Dec., ¶¶ 67-69
¶¶ 29-38	Assertion of Claim 102	Hill Dec., ¶¶ 70-89

Highmark Proposed Findings of Fact		Allcare Response
¶¶ 39-57 -	Requirement of a diagnostic smart system (Assertion of Claim 52)	Hill Dec., ¶¶ 90-99
¶¶ 71-79 -	Prior Allcare Litigation and Licensing	Hill Dec., ¶¶ 1-36, 100-101
¶¶ 80-82 -	*Trigon* Case	Hill Dec., ¶¶ 8-30
¶¶ 83-123 -	Allcare Presuit Investigation of Infringement by Highmark	Hill Dec., ¶¶ 4-35, 102-109
¶¶ 124-126 -	Allcare's "Burdensome" Discovery Strategy	Hill Dec., ¶¶ 110-116
¶¶ 127-131 -	Allcare Compensation to Charles Singer	Hill Dec., ¶¶ 117-121
¶¶ 132-136 -	Allcare defenses of res Juidicata and Collateral Estoppel	Hill Dec., ¶¶ 122-127
¶¶ 137-141-	Motion Practice	Hill Dec., ¶¶ 128-135

Highmark Proposed Findings of Fact		Allcare Response
¶¶ 146-151 -	Allcare Changed Its Claim Construction from Prior Cases	Hill Dec., ¶¶ 136-138
¶¶ 152-156 -	Allcare's Retention of Gerald Kurtyka as an Expert	Hill Dec., ¶¶ 139-145
¶¶ 157-161 -	Allcare's Retention of Reed Gardner as a Consultant	Hill Dec., ¶¶ 146-150
¶¶ 162-164 -	Allcare's Use of Experts	Hill Dec., ¶¶ 151-160
¶¶ 165-172	The Alleged Withholding of the Kurtyka Declaration	Hill Dec., ¶¶ 161-165
¶¶ 173-178 -	Third Party Document Issues	Hill Dec., ¶¶ 166-172
¶¶ 179-188 -	Alleged Failure to Produce Certain Providence Documents	Hill Dec., ¶¶ 173-189

Highmark Proposed Findings of Fact		Allcare Response
¶¶ 189-196 -	Shelton Declaration Made False Statements Regarding Allcare Contacts in Pennsylvania	Shelton Dec., ¶¶ 5-16
¶¶ 197-207 -	Hoffman Reports and *Trigon* Protective Order	Hill Dec., ¶¶ 190-204
¶¶ 208-213 -	Participation by Robert Shelton	Hill Dec., ¶¶ 205-218
¶¶ 214-221	Representations that Mr. Hill is a "patent lawyer"	Hill Dec., ¶¶ 219-225
¶¶ 222-234	Reasonableness of Fees	Hill Dec., ¶¶ 42-45, 61,-66, 73, 77, 84-87, 131-134, 165, 226-233

3. At the time I was retained by Allcare in early 2002, Allcare had approximately three patent license agreements which were obtained without resort to litigation, along with approximately twenty license agreements which were obtained as settlements in earlier litigation. To the best of my knowledge, none of these prior Allcare licensees or cases involved asserting U.S. Patent No. 5,301,105 (the "'105

Patent") against the electronic health care management systems utilized by health insurance companies to facilitate utilization review and claims payment or, in an appropriate case, payment prevention. Allcare retained my firm to determine whether we could assist Allcare to improve upon its past licensing history by developing infringement claims against health care insurance companies. As I understood the matter at that time, Allcare's objectives included establishing an improved track record of patent licensing without need of litigation, and also licensing the patent for higher premiums than those paid by other kinds of health care companies.

4. On April 16, 2002, several months after we were retained to assist Allcare, Allcare mailed Highmark, Inc. a letter alleging that Highmark was in need of a license to U.S. Patent 5,301,105 (the "'105 Patent"). Prior to sending this letter, I was involved in an investigation into the technology of Highmark, Inc., including its deployment of a web portal called Navinet for facilitating electronic authorizations over the Internet. This investigation of Highmark included reviewing literature and presentations which were available for review on the websites of Highmark, Navimedix and Accenture. It also included a review of a survey of Highmark about its system performed by Seaport Surveys. It also included an element-by-element comparison of each claim asserted, such as Claim 52, for example, to the accused Highmark system. We subsequently on more than one occasion up through October 2002 that Highmark make technical documentation available to us for inspection and confirmation that the Highmark system functioned as we claimed it

did, but Highmark refused to make those materials available to Allcare until after this case entered into the discovery process.

5. As a result of the foregoing investigation, Allcare concluded that Highmark was likely infringing the claims of the '105 Patent, including Claim 52.

6. Highmark was not the only health insurance company to receive a notice of infringement letter on or about April 16, 2002. Other companies which were similarly investigated by Allcare included Trigon (Blue Cross Blue Shield of Virginia), Tufts Health Plan, Providence, Lakewood Health Plan and Harvard Pilgrim Health Plan, On April 16, 2002, Allcare sent each of these companies a letter regarding Allcare's belief that a license to the '105 Patent was in order.

7. What Trigon, Tufts, Providence, Harvard Pilgrim and Highmark each had in common was a comprehensive Internet-based system connecting, among other things, network health providers to a central health insurance company for permitting the insurer to provide online authorizations of medical procedures to said providers. These systems were connected to the insurer's internal systems for processing and paying proper medical claims, and pending or denying claims which were not entitled to payment.

8. In May of 2002, Allcare filed a patent infringement suit against Trigon, the Blue Cross Blue Shield provider for the State of Virginia, captioned Allcare Health Mngmt. Sys., Inc. v. Trigon Healthcare, Inc., (CA 1:02-cv-756-A) (ED. Va.) (J. Hilton presiding). Allcare's theory of patent

infringement against Trigon was very similar if not identical to its theories of infringement against Trigon, Tufts, Providence, Harvard Pilgrim and Highmark.

9. Of the foregoing companies notified by Allcare of the '105 Patent and Allcare's contentions relating to infringement thereof, only Providence was willing to negotiate a license agreement with Allcare in 2002.

10. Throughout the Summer of 2002, I discussed in considerable detail the basis for Allcare's contention that Highmark infringed certain claims, including Claim 52, of the '105 Patent. By August 2002, I had performed an element-by-element comparison of Claim 52's elements with the use of the Highmark system, and had determined that there was a factual basis for believing that the use of the Highmark system practiced each step of Claim 52. I made Highmark's counsel aware that Allcare's infringement analysis against Highmark was comparable to its infringement analysis in the case against Trigon, insofar as both systems pertained to the electronic authorization capabilities whereby network providers would use a personal computer (an "input means") to electronically complete an authorization form by filling in ICD9 and CPT codes and then transmit to the insurance company for authorization approval Such a system was necessarily a utilization review system, requiring a database of predetermined procedures requiring authorization, as well as other forms of utilization review, such as medical appropriateness review. I had also made Highmark counsel aware that Allcare believed Highmark Blue Cross Blue Shield, like

Trigon Blue Cross Blue Shield, employed a "CAPS" — the standard Blue Cross Blue Shield Claims and Payment System or comparable "payment means" technology in its system for determining whether and to what extent to pay claims, and then seamlessly creating checks or issuing electronic files to its bank for payment by electronic funds transfer. After one of our telephone calls in August of 2002, Highmark's counsel Ms. Kernick indicated "You have my thanks, as well, for our productive discussion. You have been very helpful to my understanding of the patent and the position of Allcare." Allcare Appendix ("A")1 As shown elsewhere herein, Highmark did not deny my characterizations its system's use and operation, and with but once exception—the diagnostic smart system issue in step 52(c)—did not deny my characterization that the use of its system infringed Claim 52.

11. Having had detailed discussions with Ms. Kernick about Allcare's reasons for believing that Highmark was infringing, on August 8, 2002, and recognizing that Allcare believed that the Trigon Blue Cross Blue Shield and Highmark Blue Cross Blue Shield systems accused of infringement were equivalent if not identical in all material respects, Ms. Kernick asked to see Allcare's infringement contentions expressed in writing (in claim chart form) as they were stated against Trigon. This included claim charts on Claims 52 and 53, among others. Her email to me on that date stated "If you've been able to share with Trigon the claim chart, or will be doing so shortly, I'd appreciate seeing a copy." A4.

12. In response to this request, I forwarded Ms. Kernick a copy of Allcare's detailed claim charts against Trigon for her review in August 2002. These claim charts included analysis showing how Trigon's accused system infringed each of 55 different claims of the '105 Patent, including the claims at issue in this case, Claims 52, 53 and 102. I used the analysis of these claim charts to inform my own element-by-element analysis of why the Highmark system's use likely also infringed Claim 52 of the '105 Patent. Finally in discovery, Allcare provided Highmark with a claim chart in this case (A5-21) which was a memorialization of much of our pre-filing analysis of infringement against Trigon, also taking into consideration the contents of technical documentation which Highmark had refused to provide Allcare prior to suit.

13. During the discovery period in the *Trigon* case, Robert Shelton, Allcare's Vice President of Licensing, and I participated in an inspection of the accused Trigon system, Mr. Shelton and I observed first-hand how Trigon's electronic authorization submission feature worked.

14. In October of 2002, Allcare entered into a patent license agreement with Providence. This agreement used a compensation formula to determine the amount of the license fees to be paid to Allcare by Providence.

15. Trigon defended itself in the lawsuit based upon its contentions that it did not infringe the '105 Patent, and that the '105 Patent is invalid and unenforceable.

16. Central to Trigon's non-infringement position was its claim that the independent claims of

the '105 Patent, including Claim 52, required a "diagnostic smart system," which is a system capable of suggesting a diagnosis and treatment based upon the entry of a patient's symptoms. Allcare disagreed with Trigon's contention that its claims required a diagnostic smart system.

17. In October of 2002, Robert Shelton, the Vice President of Licensing for Allcare, and I hosted Ms. Kernick, her partner Mr. Frederick Colen and Anne Shearon, Highmark's in-house counsel, for a meeting to explore issues relating to 'the 105 Patent as it related to Highmark. During this meeting, two dividing issues emerged which precluded Allcare and Highmark from negotiating a license to the '105 Patent at that time. See Highmark Appendix at 164.

18. In no particular order, the first of these issues was Highmark's contention that the claims of the '105 Patent required a diagnostic smart system. The second issue was Highmark's contention that the '105 Patent was not enforceable because the patent was procured through "inequitable conduct" i.e., that Allcare failed to disclose material prior art in its possession relating to the Bank One Medical Payment System, Highmark Appendix at 164.

19. By the Fall of 2002, Allcare was in the process of litigating both of Highmark's issues in the case against Trigon. These two issues were central to Trigon's defense of the case,

20. In December of 2002, Allcare and Trigon briefed Judge Claude Hilton on numerous summary judgment and claim construction issues, including whether the claims required a diagnostic smart system (A23-27, 30-32), whether Allcare has sufficient evidence to go to trial on Claim 52

(including whether a reasonable jury could find that Trigon network providers entering ICD9 codes into electronic authorization forms and submitting said forms over the Internet practiced Step 52(c) of the '105 Patent) (id.) and whether Allcare had committed inequitable conduct so as to render the '105 Patent unenforceable.

21. Allcare argued in Trigon, as it did again in this case, that the key component of step (c) of Claim 52 of the '105 Patent is practiced when a network provider such as a doctor, nurse or administrator enters ICD9 codes into an online medical authorization form to be transmitted electronically over the Internet to the insurance company for authorization approval or denial. A30-32,

22. On or about November of 2002, Allcare expert witness Stephen K. Holland, M.D., opined that the Trigon accused system for electronically authorizing medical treatment infringed Claim 52, among others, of the '105 Patent, Dr. Holland had not participated in the live Trigon system demonstration, but he had reviewed the demonstration on videotape.

23. Chief Judge Hilton scheduled a summary judgment and claim construction hearing in January 2003 on these issues. A22.

24. In anticipation of the hearing, Allcare proposed that Highmark escrow $3.75 million. This letter is found at HM App, 354-355. Allcare further proposed that if Trigon was successful on the claim of inequitable conduct, then Highmark could keep its escrow. HM App. 355. However, if Allcare prevailed on that issue, the Allcare would keep the escrowed

funds as a lump sum license fee, and the dispute with Highmark would be resolved. Id.

25. In the January-February 2003 time frame, Highmark declined to accept Allcare's proposal and opted not to make a counter-offer to Allcare.

26. A hearing was held by Judge Hilton on these summary judgment and claim construction issues in January of 2003. A22. Highmark counsel Ms. Kernick attended the summary judgment and claim construction hearing.

27. In the aftermath of the hearing, Judge Hilton issued his claim construction rulings. A41-56. In his order, he rejected Trigon's contention that claims 1 and 52 of the '105 Patent require a diagnostic smart system in order to infringe. A45, 51-52. On Claim 1, he agreed with Allcare that the claim required *either* a diagnostic smart system *or* a utilization review smart system. A51-52, On Claim 52, he rejected the notion that step 52(c) of the '105 Patent required a cause-and-effect relationship between the entry of patient symptoms and a systematic response in the form of a proposed mode of treatment. A45.

28. In the aftermath of the hearing, Chief Judge Hilton issued his summary judgment order and memorandum opinion. A57-66. In these rulings, he denied Trigon's motion for summary judgment of non-infringement, accepting Allcare's argument instead that genuine issues of material fact remained for trial on infringement as to all 55 claims of the '105 Patent which were asserted by Allcare against Trigon, including Claims 52, 53 and 102. A65-66.

29. Judge Hilton also granted Allcare's motion for partial summary judgment dismissing with

prejudice the contention that Allcare has committed inequitable conduct in the procurement of the '105 Patent. A66.

* * *

31. Allcare filed suit in May 2003, against Harvard Pilgrim, in a case captioned Allcare Health Mngmt. Sys., Inc. v. Harvard Pilgrim. Inc. (CA No. 503-cv-89) (E.D. Texas, Texarkana Div.).

32. The system accused of infringement in the *Harvard Pilgrim* case was, again, a system which permitted network providers to enter ICD9 codes into an online medical authorization form, which was then submitted to Harvard Pilgrim, the insurance company, for authorization approval.

33. In October of 2003, Mr., Shelton, Dr. Holland and I each participated in the live inspection of the Harvard Pilgrim system, after which Dr. Holland advised Mr. Shelton and I that he believed it infringed the '105 Patent for the same reasons as the Trigon system had, This reinforced my view developed in advance of and maintained during the Trigon case that having network providers enter ICD9 codes to complete online authorization forms for submission to an insurance company performed, at a minimum, the key component of Claim 52(c) of the '105 Patent.

34. Allcare continued to have dialogue with Highmark during the first half of 2003 relating to the possibility of some kind of negotiated patent agreement.

35. On March 4, 2003, Allcare continued communications with Highmark, explaining again that the Highmark system accused was "analogous"

to the Trigon system, and that the events and rulings in the *Trigon* case had only served to strengthen Allcare's conviction relating to Highmark's infringement of the '105 Patent. This letter is HM App. 356-357. At no time prior between the *Trigon* Rulings on claim construction of the '105 Patent, and denying Trigon's motion for summary judgment of non-infringement, patent invalidity and unenforceability did Highmark ever express to me that Allcare lacked a reasonable basis upon which to conclude that Highmark was infringing the '105 Patent.

36. On or about April 3, 2003, Ms. Kernick called me in response to Allcare's stated proposal that the parties mediate their disagreements. She asked if, in return for Highmark's agreement to mediate, Allcare would agree that any suit filed would be filed in the United States District Court for the Western District of Pennsylvania. When I advised her that I would not recommend that Allcare make such a concession as the price of mediation, Ms. Kernick put me on hold. When she rejoined the call, she informed me that Highmark had sued Allcare for declaratory judgment in the Western District of Pennsylvania.

37. I subsequently confirmed that on April 3, 2003, this action was commenced against Allcare by Highmark, through the filing in the United States District Court for the Western District of Pennsylvania (Civ. Action No. 03-0462) of a Complaint for Declaratory Judgment of non-infringement, invalidity and unenforceability of the '105 Patent.

38. In the days immediately after the lawsuit was filed, I wrote Ms. Kernick a letter expressing Allcare's continuing interest in mediation. However, by that point, Highmark had apparently lost interest in voluntary mediation.

39. On November 19, 2003, Judge Gary L. Lancaster of the United States District Court for the Western District of Pennsylvania, in response to a motion by Allcare, transferred this action to the Northern District of Texas (Fort Worth Division).

40. Mr. Shelton and I participated in the live demonstration of Highmark's accused system in 2004. At my request, a court reporter and videographer were also present to create a record of the demonstration. Allcare expert Dr. Holland was not able to attend live, but—just as was the case in *Trigon*—he observed the videotape recording of the demonstration, and he also reviewed the written transcript of the demonstration.

41. During the summer of 2004, Allcare presented its identification of claims which it asserted that Highmark infringed. Those claims were to be the subject of claim construction.

42. Upon reviewing Allcare's claims asserted, Highmark insisted that Claim 1 also had to be added to the claims to be construed by the Court, even though Allcare was trying to narrow the infringement issues and was not accusing Highmark of infringing Claim 1 in its list of asserted claims.

43. When I asked Highmark counsel why Highmark insisted on the construction of Claim 1, the explanation I received was that Highmark was intent upon pursuing a contention that Claim 1 was invalid, even though the claim was not asserted

against Highmark. Even with the explanation, this deviation from normal patent practice made little sense to me.

44. Allcare and Highmark both had to offer constructions of elements of Claim 1, including the construction of Claim 1(d), which is a very complicated claim element drafted with three means plus function terms. Claim element 1(d) is unique to claim 1 and is not present in any of the other claims at issue in this case. All in all, eleven pages of the Special Master's Report and Recommendation on Claim Construction was devoted to the construction of just Claim element 1(d). [Dckt No. 367 at 26-37] By contrast, fewer than seven pages were required for the construction of Claim 102 in its entirety. [Dckt No. 367 at 43-49]

45. On October 7, 2008, after keeping Claim 1 in the case for over 4 years, Highmark withdrew its contention of patent invalidity. [Dckt No. 505] Over the course of more than 4 years of litigation over Claim 1, Allcare and its experts spent hundreds of hours of time on matters relating to both claim construction and the analysis of patent validity/invalidity issues necessary in order to produce an expert report from. Robert Gross to respond to the report of Highmark's expert Dr. Nobel, in which he devoted 10 pages of his 30-page report to a discussion of why he was of the opinion that Claim 1 was invalid under theories of anticipation, obviousness and indefiniteness. A67-79 (relevant excerpts from Dr. Nobel's report).

46. Highmark's proposed findings of fact #10-21 relate to Highmark's assertion that Allcare had "changed" its claim construction in this case. I have

reviewed these paragraphs and have several observations in response.

47. First, the changes noted in Highmark's proposed findings of fact #14 and the changes which Highmark noted in Docket No. 270 at 2-3 were made after reviewing Allcare's arguments alongside Highmark's in the briefing, for the purpose of trying to forge a consensus (i.e., be less disagreeable), or at least clarify language, and perhaps narrow issues on claim construction by accommodating the relative strengths and weaknesses of the arguments as I perceived them at the time. For example, Allcare added a reference to the "physical condition" of the patient to its proffered construction of "symptoms," because Highmark's construction advocated in favor of it, and Allcare could tolerate it. This kind of "normalization" of claim construction is not unusual as arguments on claim construction are presented for judicial determination; it happens to some extent or another in most patent cases. It was not prejudicial to Highmark, largely because the changes themselves were immaterial (more in the nature of wordsmithing than anything else), and it did not cause Highmark to undergo any unusual expenditure of attorney's fees.

48. Highmark's own filing [Docket No. 270] suggests a reason of far greater legitimacy as to why it asked this Court for a sur-reply on claim construction matters.

49. On July 5, 2005, Highmark filed its original Opposition to Allcare's Motion for Claim Construction. [Dckt. No. 253].

50. On July 12, 2005, after Allcare's Opposition was filed, the Federal Circuit issued its *en banc*

decision in the *Phillips v. AWH Corporation*, 415 F.3d 1303 (Fed. Cir. 2005), answering the issues it previously posed and clarifying the process of claim construction to be applied by the district courts. This was a decision of great significance to claim construction law and it had occurred between the filing of Highmark's opposition brief on claim construction and Allcare's reply, such that only Allcare had an opportunity to comment on it.

51. After the opinion issued in *Phillips*, on July 20, 2005, Allcare filed its Reply to Highmark's Opposition to Allcare's Motion for Claim Construction [Dckt. No. 260], citing *Phillips* as authority on some issues. Allcare Reply at 1, 2, and 4. Highmark sought to secure the ability to brief claim construction in light of *Phillips*.

52. Highmark's own motion for sur-reply stated that "The *Phillips* decision is of clear import to the briefing before this Court for many reasons. First, it disavowed the prior exalted position given to dictionary definitions by the Federal Circuit's earlier decision in *Texas Digital Sys., Inc., v. Telegenix, Inc.*, 308 F.3d 1193, 1205 (Fed. Cir. 2002), a case relied upon by both Allcare and Highmark in their respective claim construction briefing. Allcare Motion for Claim Construction [Dckt. No. 158] at 3, 4, 9 and 12 and Highmark Opposition [Dckt. No. 253] at 3, 26." [Dckt No. 270 at 5-6]

53. Highmark's proposed finding of fact #16 states that it was "Allcare's belated and extensive changes on claim construction" which caused the Court to "[strike] all the briefing on claim construction, and ... [order] the parties to re-brief claim construction."

54. Highmark's proposed finding of fact #16 is based on this Court's Order of August 12, 2005. [Docket No. 282] A review of that Order shows that it was principally directed to permit the parties to address recent changes to the law of claim construction and afforded through the *Phillips* opinion, and was also motivated by the fact that no party objected to re-briefing claim construction to the Court. [Dckt. No. 282 at 1-2; see also Dckt. No. 271]

55. The Court obviated any prejudice to Highmark by virtue of its order striking the claim construction briefs and setting forth a new schedule for briefing the claim construction issues. [Dckt. No. 282] The Court's order gave Highmark specifically what it requested [in Dckt. No. 276] in terms of the opportunity to file new briefs, allowing Highmark to address the important development afforded by *Phillips*.

56. Highmark could have opted to press the Court for a sur-reply in its submission to the Court to address Allcare's so-called "changing" claim construction [Dckt No. 276], rather than permit the claim construction process to start again. However, Highmark indicated that it wanted to re-brief claim construction in light of *Phillips*. [Dckt No. 276]

57. Highmark proposed finding of fact #18 asserts that discovery was extended by a over a year as a result of the re-briefing of claim construction. That is not correct. Highmark requested leave to file a sur-reply on the original claim construction briefing on July 29 2005. [Dckt No. 270] The amended claim construction briefing started on September 6, 2005 [Dckt. No. 287], and was completed on November 30, 2005. [Dckt No. 335]

This is only four months. Moreover, any discovery which was taken by Allcare in this additional four-month period would have been conducted in any event while awaiting the Court's decision on claim construction, regardless of whether a delay in construing the claims had occurred.

58. Regarding Highmark proposed finding of fact #20, Allcare made a minor change to the language of its proposed construction in light of arguments and comments which were expressed at the hearing on claim construction with the Special Master. Again, as before, this was for the purpose of clarifying, if not narrowing the range of available constructions for the Special Master to consider, in light of the arguments presented at the hearing. Moreover, the definition recommended by the Special Master for "identifying" was "to recognize as being; establishing the identity of someone or something." [Dckt No. 367 at 40] This is very consistent with the ordinary meaning of the term "identifying," which is why Allcare suggested it. At the time, it did not represent, in my view, a material alteration in Allcare's claim construction position.

59. Highmark did not expend any amounts relating to the "change" referenced in its proposed finding of fact #20. In fact, Highmark never raised this issue of a "change" in the claim construction with the Special Master, and failed to ask the Special Master to be heard in any way on this issue.

60. The "additional year" referenced by Highmark in its proposed finding of fact #20 has nothing to do with any change in claim construction position by Allcare. It has to do with the fact that the litigation continued for a year between the time

the claim construction briefing was completed and the time the Special Master reached a recommendation on claim construction.

61. Highmark itself actually contributed to the delays preceding claim construction in this case by its own litigation tactics. For example, starting in late November of 2004 and continuing through May 27, 2005, Highmark filed four repeated motions to strike Allcare's original claim construction and summary judgment briefs. [Dckt Nos. 150, 167, 191, 229] Each of these motions was predicated on the same basic premise—Allcare's references to the favorable orders and opinions it obtained in the *Trigon* case. Finally, on June 15, 2005, this Court put an end to this repetitious motion practice in an order denying all four of Highmark's motions to strike, and declaring that the *Trigon* rulings could be considered as persuasive authority. [Dckt No. 245]

62. While the parties were in the process of preparing claim construction briefs in September of 2005, Highmark filed a motion to compel documents. [Dckt No. 294] In response, the Court entered an order halting the claim construction schedule until the motion was decided. [Dckt No. 298] Ultimately, after a hearing before Magistrate Ramirez, Highmark's motion to compel was denied. [Dckt No. 302]

63. In addition, the parties briefed the question of whether to have a *Markman* hearing in January and February of 2006. [Dock. Nos. 338-340] Highmark offers no explanation why it waited two months after the claim construction briefing was complete, until January 26, 2005 to file this motion. This singular delay accounts for two months of the

"one year" delay of which Highmark presently complains.

64. While awaiting a ruling on the motion to have a claim construction hearing, on May 17, 2006, the Court issued a Notice that it would not appoint a Special Master. [Dckt No. 341]

65. Highmark then brought a motion seeking to compel Allcare to produce documents which were protected by attorney client and work product privileges. [Dckt. No. 342] The docket reflects that each of the parties expended considerable resources fighting over this issue. [Dckt Nos. 343-352, 354-355, 357] Finally, on November 9, 2006, Magistrate Ramirez entered an order denying Highmark's motion to compel. [Dckt No. 365]

66. The only other activity reflected on the docket during the approximately one-year time frame that Highmark complains of—between the close of the claim construction briefing process November 30, 2005 and the Special Master's entry of a claim construction recommendation in December 2006—is the Court's decision in July of 2006 to appoint a Special Master for claim construction. [Dckt No. 353] This reflected a change in the Court's own thinking about how to handle the claim construction process, as the Court had earlier indicated that it did not intend to use a Special Master. [Dckt No. 341]

67. In reference to Highmark proposed findings of fact #22-28, the following passage from the Special Master's Report and Recommendation on claim construction refutes Highmark's proposition that at claim construction the Special Master determined

that Claim 52 necessitates a diagnostic smart system.

> Highmark argues that 52(c) covers only the disclosed diagnostic smart system and not the utilization review smart system. Allcare argues that 52(c) covers either of those embodiments alternatively. Element 52(c) differs from element 1(d) in two ways. 52(c) is a method step not governed by the unique construction rules of § 112-6, and it does not include the recitation that the tentative identification of a proposed mode of treatment is "responsive" to input of symptom data.
>
> ***What disclosed embodiments the claim element covers is not a proper part of claim construction except for claim elements that are governed by § 112-6. To decide that 52(c) covers only a system using the diagnostic smart system embodiment, as Highmark proposes, would improperly read a limitation from the specification into the claim.*** To decide that 52(c) also covers the disclosed utilization review smart system, as Allcare proposes, would involve a hypothetical infringement analysis not properly part of claim construction. The infringement issue will be whether the *accused* method is covered by element 52(c), not whether the disclosed utilization review smart system is covered. That is an infringement issue for the trier of fact, not a claim construction issue.
>
> [Dckt No. 367 at 40-41 (emphasis added)]

68. In the earlier *Trigon* case, where Judge Hilton construed the terms of the phrase "entering

data symbolic of patient symptoms for tentatively identifying a proposed mode of treatment" (the operative language of Claim 52(c) of the '105 Patent) as not ***requiring*** a "cause-and-effect" relationship between the entry of the data symbolic and any systemic identification of a proposed mode of treatment. A45. This was crucial to Allcare's case against Trigon (and Highmark) because such a "cause-and-effect" relationship is indicative of a diagnostic smart system, which neither Trigon nor Highmark possessed.

69. In this case, the Special Master not only refused to recommend that a diagnostic smart system be an explicit requirement of Claim 52, he also refused to construe Claim 52(c) as requiring any sort of "cause-and-effect" relationship, which would have implicitly suggested a diagnostic smart system is a prerequisite of any infringement of Claim 52. [Dckt. No. 367 at 40]

70. Highmark's proposed findings of fact 29-38 relate to the contention that Allcare should not have maintained its claim of infringement of Claim 102 against Highmark.

71. Highmark focuses exclusively on the fact that after Highmark filed its summary judgment motion on October 31, 2007, Allcare did not brief argument relating to Claim 102, opting to focus exclusively on infringement of Claims 52 and 53 instead. (Highmark has not criticized Allcare's claim charts provided to Highmark during discovery as inadequate in any way.)

72. To begin, Claim 102 is similar to Claim 52. I have highlighted the items in Claim 102 which are

not fairly included in the terminology of Claim 52, properly construed:

Claim 52	Claim 102
52. *A* method of managing a comprehensive health care management system utilizing a data processor, data bank memories, input means and payment means comprising:	102. A method of managing an ***integrated*** health care management system having input means, payment means and memory storage comprising:
(a) entering into said data processor data identifying each of a predetermined plurality of persons;	(a) storing through said input means into said memory storage ***personal health profile data*** for each of a predetermined plurality of persons.
(b) entering into one of said data bank memories an identification of predetermined procedures requiring utilization review;	(b) storing into said memory storage symptoms and treatment data for each of a ***predetermined plurality of health profiles and problems***;
(c) entering through said input means into said data processor data symbolic of patient symptoms for tentatively identifying a proposed mode of	(c) storing in said memory storage criteria for identifying treatments requiring utilization review;

Claim 52	Claim 102
treatment and, when said proposed mode of treatment includes one of said predetermined procedures requiring utilization review, producing indicia indicative thereof, and	
(d) preventing payment therefor by said payment means until said utilization review has been obtained and data indicative thereof has been entered in said system.	(d) storing in said memory storage criteria for identifying ***treatments requiring second opinions***;
	(e) entering into said system information identifying a proposed medical treatment for one of said plurality of persons;
	(f) identifying whether or not said proposed medical treatment requires utilization review; and
	(g) preventing said system from approving payment for said proposed medical treatment if said proposed medical treatment

Claim 52	Claim 102
	requires utilization review until such utilization review has been conducted.

73. As shown above, there are very few points of technical departure between Claim 102 and Claim 52. As such, the work (in terms of system investigation, discovery, claim construction, and rebutting expert contentions of infringement) required to defend against Claim 102 would—in large part necessarily be included within the work required to defend against Claim 52.

74. As to "integrated health care management system," one of the aforementioned points of technical departure between Claim 52 and Claim 102, there is considerable overlap between that term and what Claim 52's preamble describes as a "comprehensive health care management system." This is illustrated in a side-by-side comparison of the constructions afforded each of these terms.

"Comprehensive health care management system" (Claim 52)	"Integrated health care management system: (Claim 102)
"A system combining the patient, health care provider, bank or other financial institution, insurance company, utilization reviewer/case manager and employer	"A ***unified*** health care management system that includes the ***integrated interconnection and interaction*** of the patient, health care provider, bank or other financial

"Comprehensive health care management system" (Claim 52)	"Integrated health care management system: (Claim 102)
so as to include within a single system each of the essential elements to provide patients with complete and comprehensive maintaining and restoration of health by the treatment and prevention of disease, especially by trained and licensed professionals and payment therefore[.]" [Dckt No. 367 at 12]	institution, insurance company, utilization reviewer/case manager and employer so as to include within a single system each of the essential elements to provide patients with complete health care, especially by trained and licensed professionals and payment therefor." [Dckt No. 367 at 44)

75. Allcare had a reasonable basis for proceeding against Highmark on Claim 102. During discovery, Allcare provided Highmark with claim charts showing the nature of Allcare's contentions regarding infringement. A5-21. These claim charts were provided on the element-by-element basis which is required for allegations of infringement, and they set forth the content and analysis of my pre-filing element-by-element comparison of Claim 102 to Highmark's system (improved only by access to certain confidential Highmark information which had been denied to me prior to the litigation). A13-21. Highmark has not addressed any perceived deficiencies in Allcare's charts—either in terms of the anticipated claim construction or in terms of the

factual basis for the points asserted—for maintaining its claims in discovery relating to infringement

76. On June 30, 2007, Allcare tendered an expert report by Dr. Holland which included his opinions that the accused Highmark system infringed Claims 52, 53 and 102. A81-92. Dr. Holland found that it was the same Highmark system infringing each of these three claims. Id. Thus, the introduction of Claim 102 into the case did not require any investigation into any technology or system other than the system which Allcare accused of infringing Claims 52 and 53.

77. On August 3, 2007, Highmark deposed Dr. Holland. The transcript of the deposition dedicated to examining Dr. Holland regarding the merits of his opinions unique to Claim 102 begins on page 227 of the deposition transcript and concludes on page 248 of the deposition transcript. Less than 10% of the deposition was spent addressing infringement of Claim 102.

78. Highmark proposed finding of fact #34-35 relates to the claim construction of "integrated health care management system" and to Dr. Holland's deposition testimony on the subject. However, whereas proposed finding of fact #34 relates to "interconnected" (joined by a communication path), proposed finding of fact #35 does not relate to interconnectedness of the system. Instead it relates only to Dr. Holland's testimony about the interaction between the employee (patient) and bank, and between the patient and employer. In fact, Dr. Holland's report showed that in the Highmark system, each of the participants was

joined either directly or indirectly by communication paths, and Highmark employees interacted with Highmark, their employer. A81 (diagram showing on left-hand side Highmark employees interacting with Highmark through intranet portion of the system).

79. As to interaction between constituents of the health care system, Highmark never asked Dr. Holland whether in his opinion the lack of interaction between the employee (patient) and bank, in the Highmark system precluded a finding that the Highmark system was "the integrated interconnection and interaction of the patient, health care provider, bank or other financial institution, insurance company, utilization reviewer/case manager and employer so as to include within a single system each of the essential elements to provide patients with complete health care, especially by trained and licensed professionals and payment therefor." (Emphasis added). In fact, Highmark never demonstrated that any type of interaction between the employee (patient) and bank was necessary in a health care management system "so as to include" these essential elements together in a unified, integrated system. Indeed, no such interaction was necessary other than the bank paying medical claims on the patient's behalf by electronic funds transfer. A16, 83, 89.

80. Dr. Holland's claim chart synthesized the considerable analysis of his report showing that the Highmark system was an "integrated health care management system." A83-92. At a minimum, Dr. Holland's analysis and Allcare's earlier claim chart (A5-21) demonstrates that Allcare's position

regarding Claim 102 was not frivolous or unreasonable.

81. Highmark proposed finding of fact #38 relates to a second perceived deficiency in Dr., Holland's infringement analysis. This pertains to the fact that his claim chart inadvertently omitted an explicit discussion of storing "symptoms and treatment data for a predetermined plurality of health profiles and problems."

82. Highmark specifically references Dr. Holland's deposition testimony at pages 243 and 244 of his deposition. At lines 10-16 of Dr. Holland's testimony on page 244 of this deposition, he admitted the inadvertent omission from the chart but specifically referenced 19 paragraphs of his report which he believed demonstrated the presence of this claim limitation in question in the Highmark system. He specifically said, "However, if you go to my report, I would imagine looking at Paragraph 79 through 98, it would show that all data of all predetermined plurality of health profiles and problems, all data from the claims systems is deposited in the database. That's predetermined plurality, all." HM App. 295.

83. At the time of Dr. Holland's deposition, Highmark did not pursue any examination of Dr. Holland regarding paragraphs 7998 of his report in relation to infringement of Claim 102. And in the context of the current motion, Highmark has offered no analysis as to alleged deficiencies in paragraphs 79-98 of Dr. Holland's report.

84. Highmark claims that it expended "significant and unnecessary sums in having [its] expert" respond to allegations of infringement of Claim 102 in his rebuttal report. However, a review

of the report shows that only 6 pages of his 63 page rebuttal report on non-infringement was spent discussing Claim 102 at all. A93-101 (Nobel Rebuttal Report pages 1, 56-63). This is less than 10% of the report in question.

85. I have also reviewed Highmark's motion for summary judgment of patent non-infringement and invalidity. [Dckt No. 402] There, at pages 34-38, less than 5 pages of Highmark's 50 page brief are devoted to a discussion of Claim 102. This is less than 10% of the summary judgment brief in question. [*Id.*]

86. Highmark's proposed finding of fact #38 states that because Allcare did not drop Claim 102 after Dr. Holland gave his deposition testimony, Highmark incurred "millions of dollars in the nature of attorney's fees, costs and expert fees." In addition to being unexplained and undocumented, this claim is specious on its face. Highmark devoted less than 10% of its day-long deposition of Dr. Holland to Claim 102. Highmark's expert devoted 6 pages of his rebuttal report on non-infringement to Claim 102 issues (yet curiously, Highmark states that "approximately half' of his work related to Claim 102, *see* HM App. at 762, par. 59). Highmark's summary judgment brief devoted fewer than 5 pages of its summary judgment brief to Claim 102.

87. I note that Highmark has opted not to file its attorney fee invoices or expert invoices to permit a more in-depth exploration of Highmark's claims regarding the various amounts which were supposedly expended on defense of Claim 102, and other things. This necessarily limits Allcare's ability to respond to some of the claims relating to the

amount of time intended and the reasonableness of said time asserted in the motion for fees and supporting affidavit of counsel.

88. Highmark defends its decision to keep Claim 1 in the case for over four years while it was not being accused of infringing Claim 1 as a "strategic decision." HM App. at 762, par. 63. Highmark says that this is so because Claim 1 had terms which overlapped with Claims 52 and 102. *Id.* Highmark's reasoning is suspect, because all of the 102 claims of the '105 Patent have some terms which overlap. If overlapping terms is a justification for keeping Claim 1 in the case, then that same justification would in and of itself justify Allcare's decision to keep Claim 102 in the case. However, in reality, the existence of "overlapping terms" is not a justification for Highmark's decision to keep Claim 1 in the case even though it was not being asserted by Allcare.

89. In any event, the decision by Allcare not to brief Claim 102 in response to Highmark's summary judgment motion could likewise be considered a strategic decision, in that Allcare was attempting to further narrow the issues for hearing and trial, in order to focus on what it considered to be the most important patent validity and infringement considerations for a potential trial. While hindsight may now suggest that the strategic decision was in error, neither Allcare nor its counsel could have known how issues would play out in discovery, including expert reports and depositions, nor that the Special Master would ultimately side with Highmark on certain issues relating to (non)infringement of Claim 52.

90. Highmark's proposed findings of fact #39-57 pertain to Highmark's assertion that Allcare was not reasonable to assert Claim 52 due to the fact that Highmark lacked a diagnostic smart system. As indicated earlier, at the time Allcare filed the *Trigon* case in 2002, it had developed a reasonable basis for believing that no diagnostic smart system was required to infringe Claim 52. As the *Trigon* case wore on, Allcare successfully resisted Trigon's summary judgment arguments directed to the perceived need for a diagnostic smart system, and demanded Judge Hilton that a jury could reasonably find that a system permitting network providers to enter ICD9 codes into online authorization forms for transmission to an insurance company for authorization approval over the Internet infringed the operative provisions of Claim 52(c).

91. By the time *Trigon* licensed the patent, another health care insurance company utilizing a similar online authorization system, Providence, had licensed the '105 Patent. Next, another insurance company, Tufts Health Plan, licensed the '105 Patent out of concern for a similar system which it wished to deploy. Prior to the issuance of the claim construction of Claim 52 in the Trigon action, Tufts had indicated it was unwilling to license the '105 Patent. Also, Harvard Pilgrim, another insurance company offering a similar authorization system, licensed the '105 Patent. Eventually, Empire Blue Cross Blue Shield of New York licensed the '105 Patent when Allcare raised infringement contentions against its comparable online authorization system. All of this licensing activity further demonstrates the reasonableness of the position Allcare was taking in reference to Claim 52 and the Highmark online

authorization functionality. Collectively, these five patent agreements yielded in excess of five million dollars in patent licensing fees to Allcare. (These amounts are considerably higher than the amounts paid by other types of Allcare licensees using other kinds of technology other than the insurance online authorization systems which these five companies utilized.)

92. Once the Special Master resolved claim construction by refusing to adopt Highmark's proffered construction of Claim 52(c) as requiting a diagnostic smart system, opting instead for a plain language-based construction very similar to that adopted in the *Trigon* case, Dr. Holland indicated his opinion that the Highmark system practiced Claim 52 for the same material reasons that the Trigon system infringed. He proceeded to outline this position in his report.

93. Moreover, there was nothing in the Special Master's construction of Claim 52 which would have or should have dissuaded Allcare from pursuing its infringement claim against Highmark given its success against *Trigon*. As Highmark's own proposed finding of fact #82 states, "The construction of Claim 52(c) in the Trigon Rulings was remarkably similar to that under which Highmark was found not to infringe in the present action." (Emphasis added).

94. Given the "remarkably similar" claim construction rendered by the Special Master to the claim construction in the *Trigon* case, where Allcare survived a summary judgment motion of non-infringement directed to the lack of a diagnostic smart system in the Trigon system, I expected at all times before and during this case (until Dckt No.

484, of course) that Allcare would likewise survive summary judgment in this case. I believe that basis was reasonable and well-grounded in both fact and law, and confirmed by what Allcare and I experienced in the *Trigon* case.

95. I do not believe the fact that the Special Master ultimately decided to side with Highmark and against Dr. Holland on this question means that Allcare was objectively unreasonable or that the Special Master believed Allcare's arguments were frivolous. In fact, the Special Master's Report and Recommendation does not state that Allcare's position was in any way frivolous or unreasonable. A113 (at conclusion of summary judgment hearing, Special Master stated "Argument on both sides has been very, very helpful. This has been a helpful day for me and there are some difficult issues here and I will do my very, very best to do them right, and that's all I can promise you") (Emphasis added).

96. Whether Claim 52 would ultimately read on a diagnostic smart system is not the issue for the infringement analysis in this case. The issue is whether Claim 52, properly construed, covers the Highmark system. The Special Master ultimately concluded that with reference to Claim 52(c), the Highmark network providers were entering ICD9 codes, which could arguably constitute "data symbolic of patient symptoms," but he found that they were not doing it "for tentatively identifying a proposed mode of treatment" as he had construed the claim language. [Dckt No. 484 at 13]

97. The Special Master based this opinion on a narrow interpretation of what it means to "identify a proposed mode of treatment." Specifically, the

Special Master stated that the CPT codes (not the ICD9 codes) are entered into the online authorization form to identify the proposed mode of treatment. [Dckt No. 484 atl3]

98. While this may be a reasonable view of the matter, that does not make Dr. Holland's broader view of the matter unreasonable. Specifically, Dr. Holland's position was that entering the ICD9 code was "for" identifying (naming) the proposed mode of treatment because the ICD9 code was entering in order to complete the authorization form, the details of which constitute a "proposed mode of treatment" as the term was construed. A86-87. This matter has already been the subject of considerable briefing by Allcare. [Dckt No. 486, 499]

99. Whether the patent specification of the '105 Patent would or would not "support" any Allcare infringement contention is not relevant to a discussion of infringement. The only question is whether Allcare had a reasonable basis to believe that the claim language, as construed by the Court, supports infringement when compared to the evidence about how the accused system operates. In this regard, the Special Master agreed with Allcare, holding separately that Highmark inappropriately focused on the patent specification's use of ICD9 codes—in a manner which did not support infringement—rather than focusing on how said codes were used in the Highmark system. [Dckt No. 484 at 13 ("Thus, whether or not the Highmark system uses ICD9 codes as data symbolic of symptoms was not resolved in the claim construction of 52(c), which only concluded that ICD9 codes were

not used as symptom data in the preferred embodiment disclosed in the patent").

100. Highmark neglected to inform the Court that since I took over the representation of Allcare in 2002, Allcare licensees Providence, Tufts, GE Medical and Baxter licensed the '105 Patent without resort to litigation.

101. Of the five health insurance companies Allcare identified in paragraph 4 of this Declaration, Allcare licensed Tufts and Providence without resort to litigation. Allcare sued Trigon and Harvard Pilgrim, both of which subsequently licensed the '105 Patent. Whereas Allcare sought to continue negotiations with Highmark in 2003, Highmark sued Allcare for declaratory judgment instead.

102. Highmark proposed findings of fact #91 relates to the pre-filing inquiry Allcare performed relating to Highmark. In support of its characterization of the pre-filing inquiry, Highmark cites to an Allcare Interrogatory Answer set forth in HM App. 162-166.

103. It should be noted that Allcare's response to this Interrogatory set forth a detailed answer which by itself is more than adequate to justify the conclusion that Allcare's pre-filing inquiry was reasonable under the circumstances. See HM App. 162-166; see also HM App. 174-179 (a supplemental response setting forth additional detail relating to the non-privileged portion of the pre-filing analysis and investigation of Allcare).

104. Moreover, Allcare clearly stated in its response that it was not waiving attorney-client privilege or work product information to advise Highmark during the pendency of the case what

efforts Allcare counsel had undertaken, and the mental impressions formulated as a result of my pre-filing investigation. I can testify first hand to the fact that, prior to filing a counterclaim of infringement against Highmark, I went through particular claims of the '105 Patent on an element-by-element basis, ultimately using the claim construction Allcare had received in the Trigon case for Claim 52, and for other claims using what I believed based on discussions with appropriate technical consultants such as Dr. Holland and dictionaries were reasonable constructions of terms, and compared them to the accused Highmark system to satisfy myself that there was a reasonable basis to conclude Highmark was likely infringing the '105 Patent.

105. Contrary to Highmark's claims, my pre-litigation conclusions regarding Highmark's infringement were not based upon the analysis of Robert Shelton and were not merely based upon the report provided by Seaport Surveys. They were based upon independent review of numerous materials, pre-filing discussions with counsel for Highmark, the developments in the *Trigon* case, discussions with technical experts including Dr. Holland, Martin Kaliski, Ph.D., and Gerald Kurtyka (each of whom authored an expert report in *Trigon* addressing one or more aspects of patent infringement of Trigon's system for conducting online authorizations of medical care).

106. By October 2002, when the parties met face-to-face to discuss infringement and related issues, I had shared much of the infringement analysis with Highmark's outside counsel, after which time she

complimented "my attention to detail and good lawyering." A3.

107. In fact, Highmark's own appendix confirms that Allcare performed an element-by-element comparison of the claims of the '105 Patent to the accused technology at issue. See HM App. 176-179 (showing that Allcare provided to Highmark in August 2002 "detailed claim charts setting forth its proposed claims construction and infringement analysis for each of the approximately 55 asserted claims in the Trigon litigation, together with the corresponding survey responses provided by the Trigon and Highmark employees" and that the survey responses showed Highmark's system was comparable if not superior to Trigon's in each material respect).

108. In fact, in the face of a detailed explanation on an element-by-element basis of Highmark's infringement of Claim 52, which preceded the face-to-face meetings we had with Highmark in October of 2002, the only element Highmark claimed was missing from Claim 52 of the '105 Patent prior to the commencement of this litigation was a diagnostic smart system (which Highmark believed was implicitly required by Claim 52(c)), See HM App. 164. For reasons stated previously herein, Allcare had developed through investigation with Dr. Holland a different viewpoint that a diagnostic smart system was not necessary for an online medical authorization system to infringe. This view was reinforced through the rulings in the *Trigon* case, which denied Trigon's motion for summary judgment of non-infringement. Thus, I maintain that Allcare had a reasonable belief prior to this suit and during

this suit that Highmark's claim that it lacked diagnostic smart system functionality was not a basis for Highmark to prevail on a contention of non-infringement. See HM App. 164-65.

109. In advance of this litigation, Allcare asked for the non-public technical documents and users manuals relating to Highmark's system and how it functioned which would have confirmed or rejected our understanding of the accused system. Those requests were continually denied by Highmark. See HM App. 166. As part of those efforts, we had indicated at least as early as October 2002 that Allcare was willing to enter into a confidentiality agreement with Highmark to guard the secrecy of the materials in question.

110. Highmark's proposed finding of fact no. 126 describes discovery requests which Allcare served upon Highmark in early 2004. These discovery requests are not unusual in size or scope for a large patent infringement case such as this one.

111. The reason why I was motivated to seek discovery at the outset of the discovery period from Highmark is that Highmark counsel had made me aware of Highmark's intention to file a motion for summary judgment at the earliest point in time at which the motion would likely be heard. Ultimately, on June 16, 2004, I managed to obtain Highmark's stipulation not to file a summary judgment motion until August 19, 2004 [Dckt No. 111, par. 14], and on October 29, 2004, Highmark filed its first motion for summary judgment. [Dckt No. 134] Had I not moved promptly to take discovery from Highmark, Allcare's interests could have been significantly

prejudiced in terms of its ability to marshal the necessary evidence to respond to Highmark's motion.

112. The interrogatories which were served were within the number of interrogatories permissible by rule.

113. The requests for production of documents were necessary in order to adduce the Highmark documents which Allcare needed in order to understand the material aspects of Highmark's system development, both technically (for infringement purposes) and financially (for damages purposes). They were also necessary in order to understand the basis for Highmark's contention that its own previous technologies invalidated the claims of the '105 Patent.

114. Highmark objected to virtually all of Allcare's written discovery. The parties conferenced on several occasions, and in some cases, Allcare opted not to file a motion to compel despite the non-production of documents by Highmark.

115. The persons Allcare noticed for deposition were persons identified by Highmark in its initial disclosures as persons who were aware of the prior art Highmark systems which rendered the claims of the '105 Patent invalid. It was important that Allcare take their depositions in order to discovery whether and to what extent Highmark had a bona fide case of patent invalidity.

116. In each case where Allcare noticed a deposition, the actual date, start time and place of the deposition was negotiated by Allcare and Highmark counsel by agreement. If and to the extent that Highmark took the position that it needed an extension of time with respect to

responding to written discovery or setting up depositions, my recollection is that I adhered to my usual practice of trying to work out a consensus as to the time for extensions to respond or, in the case of depositions, finding a mutually convenient date.

117. Highmark's proposed findings of fact 127-131 describe Allcare's so-called "victory-based" compensation agreement with Charles Singer. Mr. Singer is a leading health care industry consultant on information technology matters, who is also a former director of Allcare. He was originally brought in by Allcare as a consultant to Allcare prior to any of Allcare's litigation of the '105 Patent. Because Allcare lacked the money which it would have needed to compensate Mr. Singer for his services at that time, a compensation agreement was negotiated which provided him with a running 3.5% interest in any proceeds (i.e., royalties) derived from the '105 Patent. This Agreement was not negotiated with a view towards having Mr. Singer testify in litigation as an expert. This Agreement was entered into in between Allcare and Mr. Singer years before this or any other Allcare litigation.

118. Allcare did not try and hide this fact from Highmark. In fact, on at least one occasion prior to Highmark's commencement of litigation against Allcare, Highmark counsel Ms. Kernick advised me that she was aware from her review of materials relating to the *Allcare-Cerner* case that Mr. Singer had a royalty interest in Allcare's patent license fees.

119. In this case, Mr. Singer provided expert testimony only at claim construction, which is decided by the Court, not a jury. He was compensated hourly by Allcare for his time spent on

this case. However, his earlier royalty agreement with Allcare continued (and still continues) in full force and effect.

120. Mr. Singer provided expert testimony on a very narrow fact—that "medical payment systems" of the 1991-era included systems which paid claims by check, and also included other systems which paid claims by electronic funds transfer.

121. Highmark briefed the issue of Mr. Singer's alleged bias years before the Special Master's Report and Recommendation on claim construction. [E.g., Dckt No. 155] The Court has at all times been fully aware of this issue.

122. Highmark proposed findings of fact 132-136 relate to Allcare's pleading of res judicata and collateral estoppel. Specifically, Allcare filed its Answer and Counter-Claim on December 16, 2003. [Doc. #22]. On Tuesday January 6, 2004, counsel for Highmark contacted Bryan Medlock, co-counsel for Allcare about filing a Motion for Judgment of the Pleadings regarding Allcare's allegations of Res Judicata and Collateral Estoppel (see Exhibit J, January 9, 2004 letter from Cynthia Kernick to V. Brian Medlock, Jr.).

123. Three days later, on January 9, 2004, Highmark served its Motion for Judgment on the Pleadings as to Defendant's Fifth Affirmative Defense of Res Judicata and Collateral Estoppel with an eleven page brief in support. [Doc. # 28; doc. 29 at 16].

124. When Highmark counsel wrote to notify Allcare counsel Mr. Medlock of Highmark's filing of the motion, she noted that in the prior call just three days earlier, Mr. Medlock had indicated a

willingness to be "open-minded" on this issue. Yet Highmark obviously proceeded immediately to draft an eleven page brief for filing without even giving Allcare the opportunity to research the relevant authorities.

125. Counsel for Highmark and counsel for Allcare then met via telephone conference and held a status conference in accordance with this Court's Order for the purpose of preparing and submitting a Joint Status Report. [Dckt No. # 32].

126. In the Joint Status Report, the parties reported to the Court the following:

> Pending before this Court is Highmark's Motion for Judgment on the Pleadings as to Defendant's Fifth Affirmative Defense and Related Claims and Averments which was filed on January 9, 2004 ("Highmark's Motion"). Allcare will be filing a Motion for Leave to File an Amended Answer and Counter-Claim to Withdraw its Fifth Affirmative Defense and Claims and Averments Related to Res Judicata and Collateral Estoppel ("Allcare's Motion"). Highmark does not intend to oppose Allcare's Motion. Upon the filing of Allcare's Amended Answer and Counter-Claim the parties will submit to the Court an agreed order denying Highmark's Motion as moot. Consequently there will be no pending motions.
>
> [Dckt No. 32 at 10]

127. On January 30th, 2004, this Court granted Allcare's Motion to File its First Amended Complaint and Counter-Claim and further ordered that Highmark's Motion for Judgment on the pleadings as

to Defendant's Fifth Affirmative Defense and related Averments was denied as moot.

128. Highmark's proposed findings of fact 137-141 describe allegations of abusive motion practice leveled at Allcare. The focus of this matter is what is referred to by Highmark as the Five Motions, i.e., a number of motions to compel filed by Allcare against Highmark in the Spring of 2004.

129. During the pendency of these motions, the Court ordered Allcare and Highmark to meet and confer one final time in an effort to reach an agreement that would obviate the need for the Court to reach a determination on the merits of the motions. [Dckt No. 108] In response to this directive from the Court, the parties conferred in person in an attempt to settle time Five Motions and work together more cooperatively during discovery. After a few additional days of negotiating and drafting, the parties prepared and filed with the Court a discovery Stipulation on June 16, 2004, The Stipulation resolved all Five Motions. [Dckt No. 111, paragraph 15; Dckt No. 112]

130. The fact that Allcare negotiated the Stipulation in good faith does not mean that Allcare lacked confidence in its positions in the motion, any more than Highmark's agreement to the Stipulation reflects Highmark's fear that its own positions were not well-founded. Rather, Allcare entered into the Stipulation to show good faith in light of the Court's Order [Dckt No. 108], and try to work out disagreements with Highmark relating to discovery matters and other matters affecting the orderly scheduling of the case.

131. Highmark's position regarding what it perceives as unnecessary (and therefore abusive) motion practice also ignores the fact that Highmark filed at least ten motions which were denied on the merits:

a. Highmark's Motion for Scheduling Conference [Dckt No. 41; denied by Dckt No. 58];

b. Highmark's Motion for reconsideration re: Order on Motion to Amend/Correct [Dckt No. 42, denied by Dckt No. 57];

c. Highmark's Motion to strike references to *Trigon* Rulings in Allcare's memorandum in support of Allcare's opposition to Highmark's first motion for summary judgment [Dckt No. 150; denied at Dckt No. 245];

d. Highmark's Motion to strike Allcare's motion for claim construction [Dckt No. 167; denied at Dckt No. 245]

e. Highmark's Emergency motion to strike Allcare's memorandum in opposition to Highmark's second summary judgment motion [Dckt No. 191; denied at Dckt No. 245];

f. Highmark's Amended motion to strike references to *Trigon* Rulings in Allcare's memorandum in support of Allcare's opposition to Highmark's first motion for summary judgment [Dckt No. 229; denied at Dckt No. 245];

g. Highmark's Motion to compel responses to document requests nos. 30 and 31 [Dckt No. 294; denied at Dckt No. 302];

h. Highmark's Motion to compel production of documents withheld by Allcare improperly on

grounds of privilege [Dckt Nos. 342 and 347; denied at Dckt No. 349 and 365];

i. Highmark's Motion to exclude Allcare damages expert Robert Sherwin [Dckt No. 399; denied at Dckt No.484]; and

j. 3. Highmark's Motion to exclude Allcare infringement expert Dr. Holland [Dckt No. 406; denied at Dckt No. 484].

132. Allcare was driven to considerable time, expense and delay as a result of having to defend against these ten unsuccessful motions filed by Highmark, as well as others which are reflected in the docket of this case.

133. Highmark's position also ignores the fact that, based on its own discovery misconduct, Allcare was forced to file the following motions, which were granted in whole or in part on the merits:

a. Emergency motion to inspect promises [Dckt No. 63; granted at Dckt No. 77];

b. Motion to compel discovery [Dckt No. 166; granted in large part by Dckt No. 273].

134. Allcare was driven to considerable time, expense and delay as a result of having to bring these discovery motions against Highmark.

135. Separately, Allcare filed a partially successful motion to strike the expert reports of Jeremy Nobel, MD [Dckt No. 403; granted in part by Dckt No. 484].

136. Highmark's proposed findings of fact 146-151 describe allegations that Allcare took a position regarding whether the preamble phrase "comprehensive health care management system" is a claim limitation in need of construction. These

proposed findings of fact do not assert that Allcare ever changed its position on this issue at any time during the litigation with Highmark.

137. In the *Trigon* case, Allcare successfully argued that the preamble term "comprehensive health care management system" is not a claim limitation in need of claim construction. In the course of making this argument, on behalf of Allcare, I explicitly relied on *Vaupel Textilmaschinen KG v. Meccanica Euro Italia, S.P.A.*, 944 F.2d 870, 880 (Fed. Cir. 1991), as my lead case at oral argument for the proposition that incorporation of a preamble term into a patent claim, where, as here, the reference occurs at the very end of the claim language, is as a "reference point," not a claim limitation. A34-35 (*Trigon* Hearing Transcript, January 10, 2003, at 27-28). Prior to claim construction in this case, I discovered a more recent case which was decided after *Trigon*, called *Eaton Corp. v. Rockwell Int'l*, 323 F.3d 1332 (Fed. Cir., 2003). There, Eaton, like Allcare, argued that the incorporation of preamble language in the body of the claim was "merely providing a 'reference point' as in *Vaupel Textilmaschinen KG v. Meccanica Euro Italia S.P.A.*, 944 F.2d 870, 880, 20 USPQ2d 1045, 1053 (Fed. Cir. 1991)." *Eaton*, 323 F.3d at 1338. The Federal Circuit rejected Eaton's reliance upon *Vaupel*, and devoted two pages of its opinion to distinguishing *Vaupel*. 323 F.3d at 1340-41.

138. Rather than attempting to rely upon *Vaupel* again in this case as part of an argument that the preamble recitation of some type of health care management system was not itself a limitation, Allcare opted to agree with Highmark during the

process of arriving at a joint claim construction that the preamble references to a "comprehensive" or "integrated" "healthcare management system" in claims 1, 52 and 102 constitute claim limitations. Since my belief was that Highmark would likely infringe regardless of the outcome of this issue, Allcare determined it was the better course to agree with Highmark that the preamble constitutes a limitation in the instant case rather than to continue to rely upon *Vaupel* in view of *Eaton*. This position also carried with it the advantage of narrowing the disputed issues which the Court would need to decide on claim construction in this case.

139. Highmark's proposed findings of fact 152-156 relate to Allcare's retention of Gerald Kurtyka as an expert given his knowledge of facts which are relevant to the Bank One Medical Payment System, at least one written description of which is prior art relevant to patent validity and enforceability issues in this case.

140. In this case, Highmark was not prejudiced by Mr. Kurtyka's role as an expert on the proper construction of the term "payment means" as it is used in the '105 Patent. Insofar as he has knowledge of facts useful to Highmark in the case, Mr. Kurtyka reaffirmed the statements he made in the 2000 Kurtyka Declaration. Highmark Appendix 300.

141. It is incorrect for Highmark to suggest in its proposed findings of fact that Mr. Kurtyka reaffirmed the testimony offered in the 2000 Cerner Declaration, but it was "notwithstanding the fact that Allcare had paid Mr. Kurtyka $70,000 to prepare a new fact declaration." See Highmark proposed finding of fact 172. The Kurtyka

Deposition excerpts at HM App. 302-304 shows that the $70,000 is comprised of $40,000 of expert witness-related activities in *Trigon*, and $30,000 worth of expert-related activities in the instant case. Paying an expert for consulting work, document review, report creation and time spent as an expert in deposition is very different from paying a witness for fact testimony. Mr. Kurtyka was not paid by Allcare for anything other than work he performed as a consultant and expert in *Trigon* and later this litigation.

142. My recollection is that at the time in 2002 when Mr. Kurtyka issued a second declaration—one setting forth important facts which were omitted from his first declaration because they were not helpful to parties accused of infringing the '105 Patent—he was not a retained consultant or expert of Allcare. I first contacted Mr. Kurtyka before this case and before the *Trigon* case to interview him about the Bank One Medical Payment System. His 2000 Declaration was uncorroborated in large part by the available documents and in other places unusually vague. The Special Master agreed with this characterization of his 2000 Declaration. [Dckt No. 484 at 26-27 (calling the 2000 Declaration "uncorroborated" and "vague" as to critical details) As he was describing important information to me which was not contained in his 2000 Declaration, I asked him if he would be prepared to sign a second declaration setting forth these additional facts. He agreed. At this time, Mr. Kurtyka had not yet been retained or compensated by Allcare.

143. After Mr. Kurtyka signed his second declaration as to facts relating to the Bank One

Medical Payment System, Allcare was in need in the *Trigon* case for an expert to testify relating to the proper claim construction of the term "payment means," and, perhaps as importantly, to investigate and determine whether Trigon employed such a payment means for purposes of infringement analysis (given the considerable scope and sophistication of Trigon's claims payment infrastructure). Mr. Kurtyka's background in medical payment system technology was a perfect fit for that role, and so he was hired for that purpose, and he performed the work required of him, for which he testified he was paid approximately $40,000.

144. Highmark ignores that fact that nothing that happened before or during the *Trigon* case should be considered in determining whether this case is exceptional. Had this case gone to trial, any testimony by Mr. Kurtyka would have been in his capacity as a fact witness because his role as an expert was limited to the claim construction phase of this case (and thus, was already concluded). Allcare would not have compensated him for any time associated with his testimony.

145. Highmark next alleges that Mr. Kurtyka's second declaration "contradicts" his first, but Highmark does not explain the basis for this contention. Mr. Kurtyka has not denied the truth of the statements made in his first or second declarations [Dckt No. 484 at 27], and Highmark failed to demonstrate that any statement by Mr. Kurtyka in his second declaration was false, or tantamount to a withdrawal of any statements made in his original declaration. The Special Master

indicated that he was not questioning Mr. Kurtyka's veracity. [Dckt No. 484 at 27]

146. Highmark's proposed findings of fact 157-161 relate to allegations about Allcare's relationship with Dr. Reed Gardner. This relationship was formulated in 2002, at a time when Allcare was not engaged in any litigation. It, like the agreements between Allcare with Messrs. Singer and Kurtyka, is not a part of Allcare's litigation conduct in this case.

147. Contrary to Highmark's suggestion, Dr. Gardner was not retained by Allcare in connection with this case. Long before this case, in 2002, shortly after retaining my services as counsel, and at a time when Allcare was not involved in any pending litigation, on behalf of Allcare, I retained Mr. Gardner as a consultant because I felt I needed a better understanding of certain prior art relating to the automation of "ancillary services" such a pharmaceuticals. Along with others at the University of Utah and its related Mountainview hospital, Dr. Gardner had created the HELP system which was considered potential prior art against certain claims of the '105 Patent (most namely, claims 34 and 85, and their dependent claims, which were not at issue in this case). One of my reasons for retaining Dr. Gardner was to be able to have his good advice relating to the viability of certain of the claims of the '105 Patent. I have personally visited with Dr. Gardner in Salt Lake City, Utah, and he has shown me the HELP system at work provided me with valuable counsel relating to the state of the prior art. This, in turn, has helped me to better counsel Allcare.

148. In this case, Magistrate Ramirez after a hearing regarding the *Allcare-Cerner* litigation and a review of the protective order in that case, entered an order denying Highmark's motion to compel responses to requests for production nos. 30-31, and requiring that if Highmark sought information from third parties relating to matters relating to the proceedings in the *Cerner* litigation, it needed to initiate that contact in writing, with a copy to Allcare counsel. [App. 302] Shortly after this order, I advised Ms. Kernick that because Mr. Gardner was a consultant to Allcare, she could initiate contact to him directly through me. See HM App. 179-180.

149. The fact that Dr. Gardner was a consultant to Allcare did not affect his ability to testify as a fact witness in this or any other case if someone needed him to answer any questions about any of the systems he was involved in developing.

150. Dr. Gardner's prior expert report related to claims 34 and 85, which are not at issue in this case. Based on my interactions with him and my personal exposure to the actual HELP system itself in Utah, I would say that Dr. Gardner's expertise and the HELP system do not relate to the medical authorization/utilization review process at issue in claims 52, 53 and 102, the claims Highmark was accused of infringing. Highmark never even sought to speak with or elicit testimony from Dr. Gardner during the pendency of this case.

151. Highmark's proposed findings of fact 162-164 relate to Allcare's supposed withdrawal and replacement of experts. I have reviewed these proposed findings of fact, and they are in error.

152. At no time did Allcare ever "withdraw" any report of any expert in this case. It is more accurate to say that Allcare brought the best expertise to bear that it could on each of a variety of different claim construction terms. Once the Special Master resolved the claim construction disputes on Claim 52 and 102 in a manner perceived by me as favorable to Allcare's infringement case, and after discussing the matter with Allcare's technical consultants, I was confident that using more than one technical expert to address infringement issues in this case would be overkill

153. Martin Kaliski, PhD., is a retired professor of electrical engineering who has significant experience working with patent validity analysis and patent claim construction. His expertise was necessary to assist Allcare with developing and defending its claim construction of "input means" as that term is used in the '105 Patent. "Input means" is not a health care term of art, and the focus of the inquiry turned on the functionality of "terminals" *circa* 1991, which is why Dr. Kaliski's special expertise was useful on this matter.

154. Dr. Kaliski's name was brought to Highmark's attention along with other claim construction experts Stephen K. Holland, M.D., Gerald Kurtyka and Charles Singer during the process of preparing the Joint Statement on Claim Construction. If Allcare wanted to preserve the ability to rely upon their testimony for claim construction, then Allcare needed to disclose them to Highmark in 2004, which it did pursuant to leave of Court. [Dckt No. 139]

155. When Highmark filed its early motion for summary judgment in October of 2004, Allcare had yet to offer any expert reports on any issues in the case. No such reports were due because the claims of the patent were yet to be construed. (Ultimately the court denied this summary judgment motion as premature given the lack of claim construction in Dckt No. 304.) Given the need to respond and respond quickly to the motion for summary judgment, and the lack of any expert reports to use in the process, I showed Dr. Kaliski the Highmark summary judgment materials and he advised me that he believed that there were deficiencies relating to Highmark's contentions relating to the prior art and whether a "diagnostic smart system" was the "heart" of the '105 Patent.

156. Dr. Kaliski issued no report in this case. Moreover, he did not develop any opinions relating to patent infringement. His opinions expressed during the initial summary judgment motion practice were limited to a declaration addressing the claim construction of input means and the contents of the prior art cited by Highmark and deficiencies therein. Dr. Kaliski performed at least the vast majority, if not all of this work in the latter half of 2004.

157. After claim construction, and on the due date for initial expert reports in June of 2007, Highmark tendered a report by Jeremy Nobel, M.D., who is a professor at Harvard in the field of healthcare and healthcare information technology. Dr. Nobel's report relied upon extensive prior art, much of which was not subject to any prior opinion or analysis by Dr. Kaliski. A.69 (par. 31), A.74 (par. 43), A.77 (par. 55), A.78 (par. 56).

158. In order to most effectively rebut Dr. Nobel's patent invalidity analysis in his 2007 report, Allcare determined in 2007 that Robert Gross would be preferable to act as Allcare's rebuttal expert. This was due to his more extensive background specifically in healthcare-related information technology.

159. Once the Court construed the claims of the '105 Patent, Allcare also had to come forward with expert report on infringement. Allcare expert Dr. Holland provided the infringement report. It was simply not necessary for Allcare to introduce additional reports by claim construction experts Messrs. Singer, Kurtyka and Dr. Kaliski, which would have only escalated the time and expense of this litigation, and ultimately proven duplicative of the contents of Dr. Holland's report.

160. Dr. Kaliski and Mr. Kurtyka were not "replaced" by Dr. Holland, Mr. Gross, or any other expert. Once they opined on their respective claim construction terms, there was nothing left for them to do in the way of providing expert opinions for litigation, or expert testimony in the case.

161. I have reviewed Highmark's proposed findings of fact 165-172 relating to the allegation that Allcare withheld the 2000 declaration of Gerald Kurtyka from Highmark between January 2004 and August 2004. I know these allegations are false.

162. As a result of Allcare's prior experience in patent litigation, Allcare has had certain business records and other documents copied and bates-labeled. My office sent Allcare's non-privileged and bates-labeled files to co-counsel Joe Cleveland of Brackett & Ellis to be made available to Highmark

for inspection. I did not pull the Kurtyka Declaration, AHM 034554-034567, from this production, nor did I instruct that it be pulled from production.

163. Allcare counsel Mr. Cleveland made Allcare documents available for inspection to Highmark—including the Kurtyka Declaration, AHM 034554-034567 — in February of 2004. See March 16, 2004 letter from Mr. Cleveland to Ms. Kernick which on the first page references the production (A103), and on Exhibit A (A110) to the letter includes a documented log of each of the documents—including AHM 034554-034567 — which were made available to Highmark for inspection and copying).

164. In any event, I had no reason to withhold the Kurtyka Declaration from production pending the mediation of the parties, for I believed that Highmark was already aware of the Kurtyka Declaration from the Trigon case. In the Trigon case, the parties argued over whether the Bank One Medical Payment System was material to patentability. The Kurtyka Declaration was cited and relied upon extensively by Trigon in the briefs and at the hearing in the *Trigon* case, where Highmark counsel Ms. Kernick was present. A28-30, 38-40 (Hearing Transcript at 12-14, 38-40). Allcare, on the other hand, argued to material deficiencies in the Kurtyka Declaration in terms of its failure to distinguish between the Bank One Medical Payment System itself (which was not prior art as it did not come into existence until 1992) as opposed to the 1989 one-page marketing flier advertising the forthcoming system. A36-37 (Hearing Transcript at 30-31). As I mentioned before, counsel for Highmark

was present in the courtroom during the hearing on the summary judgment motions in the Trigon case.

165. I disagree with Highmark's contention that Allcare's retention of Mr. Kurtyka as an expert on a limited claim construction issue in this case ("payment means") somehow increased the cost of litigation. Highmark has put forth portions of Mr. Kurtyka's deposition to show that Highmark was able to question him, and that he answered the questions in a straightforward manner. [Dckt No. 484 at 27 (noting that Kurtyka affirmed the testimony from his declaration)] As Highmark points out, in his expert deposition, he was asked about and affirmed the statements in his first declaration, and he explained in response to Highmark's questioning the circumstances associated with the origins of his declaration.

166. Highmark's proposed findings of fact 173-178 relate to allegations that Allcare engaged in bad faith by gathering up documents from third parties. In my experience in patent litigation, it is not at all unusual for the patent owner to gather up the files of the prosecuting attorneys and the inventors prior to commencing any sort of licensing or litigation effort. In fact, I would say this is the norm.

167. My understanding at the outset of the Trigon case, which was my first case representing Allcare, was that before I began representing Allcare, prior Allcare attorneys previously gathered up these files from prosecuting attorneys John Sigalos and Andrew Hassell, as well as from Dr. Cummings, the inventor. I believed this to be the case because I could see, among other things, documents with bates labels starting "SIG" (ending at SIG 1934) for documents

collected from Mr. Sigalos and "HAS" (ending at HAS 1210) for documents collected from Mr. Hassell. I may very well have communicated with Highmark to that effect.

168. What Dr. Cummings (not Allcare) said in his objections and responses to Highmark's subpoena duces tecum (HM App. 695-700)—regarding the fact that Allcare already would have copies of documents subpoenaed from Dr. Cummings and his law firm, Holland & Knight, was what I believed to be true at the time based on my discussions with Dr. Cummings. However, I note that Dr. Cummings stated plainly in his response to each request for documents that he had made inquiries with his lawyers to search their files [HM App. 695-700], and neither Allcare nor Dr. Cummings should be penalized for the fact that he did so, and his efforts yielded the production of additional documents to Highmark.

169. I do not recall any additional documents obtained by these subpoenas to be particularly useful. Thus, I disagree with the characterization of Highmark counsel that any document which Highmark obtained directly from Dr. Cummings was "critically relevant" to its contention of inequitable conduct. See HM App. 757 at paragraph 40. I note that neither the Highmark proposed finding of fact nor the supporting appendix identifies even one specific document obtained directly from Dr. Cummings as being relevant. Lacking any explanation from Highmark as to what document was supposedly "critically relevant" and why, I cannot further address this matter.

170. Highmark's proposed statement of fact 174 asserts that in my capacity as counsel to Allcare, I made statements to Highmark to the effect that "all" documents from Dr. Cummings were in the possession of Allcare and thus no subpoena was necessary. I have reviewed HM App. 695-700 (Dr. Cummings objections and responses to the subpoena, signed by Joseph Cleveland), and HM App 364-365 (a letter by Highmark's counsel to Mr. Cleveland regarding Dr. Cummings' objections), and none of the referenced materials support this proposed finding of fact. I personally have no recollection of making the statement to Highmark that Dr. Cummings unquestionably had turned over all documents to possession of Allcare, or that a subpoena to Dr. Cummings would be unnecessary.

171. Highmark's proposed statement of fact 176-177 purports to show that I interfered with the Highmark subpoena to Holland & Knight. This is simply false. Dr. Cummings was prepared to produce all of the documents that both Holland & Knight and Dr. Cummings were able to locate in response to the prior subpoena to Dr. Cummings. In view of the prior subpoena and the fact that they were cooperating with Allcare and Highmark in making documents available, I asked Ms. Kernick as a courtesy to withdraw the subpoena to Holland & Knight. This was not an effort in any way to avoid producing documents. Rather, the request I made was an effort to accommodate a request from one or more partners of the law firm Holland & Knight who did not wish to have to incur the time and expense of complying with the law firm's internal procedures for handling and responding to subpoenas. (Many large law firms, including Holland & Knight, have

cumbersome if not complicated procedures in place for "risk management"-related activities, including responding to subpoenas which seek production of client files).

172. In any event, when Highmark refused to accommodate my request that the subpoena to Holland & Knight be withdrawn, I withdrew my willingness to make Holland & Knight documents available for inspection at my offices on Dr. Cummings' behalf. As a result, the documents were made available for inspection at Holland & Knight on the same date as the deposition of Dr. Cummings, which was held at a conference room of Holland & Knight (Orlando, FL location).

173. Highmark proposed findings of fact 179-188 assert that Allcare hid "key damages documents" from Highmark until after discovery closed. This too is false.

174. As a threshold matter, Highmark alleges that the Allcare-Providence pre-license drafts and related negotiation correspondence was responsive to Highmark request for Production No. 11. However, the documents at issue do not "describe licensing policies or strategies on patents licensed by Allcare" and therefore are not responsive to said request.

175. Moreover, because Allcare never relied upon any of these pre-license documents to defend the reasonableness of the royalty claim it asserted against Highmark, making the documents similarly non-responsive to Highmark Request No. 15.

176. Highmark has mischaracterized Allcare's response to Highmark's Request No. 18 in proposed finding of fact 182 by claiming that Allcare advised Highmark that Allcare had previously produced all

responsive documents in response to Request No. 18. In fact, this is not what Allcare stated. According to the HM App. 582, Allcare stated it had produced all "non-privileged non-objectionable" documents which it had been able to locate and identify after a "reasonable search."

177. As to Highmark's Request No. 18, this was a very broad request. Allcare expressly objected to this request as unduly burdensome. The request as drafted would have required Allcare to go to multiple potential sources of responsive documents in various locations scattered around the United States (including Allcare offices in Texas, Robert Shelton's office in California, our off-site storage facility in metropolitan Atlanta, Georgia, and the offices of prior counsel located in Houston and Fort Worth) to locate and provide Allcare's pre-license drafts and all negotiating correspondence over a seven-year period of time, for 30 or more patent license agreements, plus all pre-agreement drafts and negotiating correspondence for any agreements which were attempted but never consummated.

178. The reference to "our files" in HM App. 182 was merely a generic reference to Allcare's files. It was not meant to connote that I specifically had the Providence negotiation documents handy and simply held them back. That was not at all the case. In case of Providence, as with other licensees and prospective licensees which my firm was involved in negotiating, the correspondence and drafts, to the extent they were kept, were not located in the same files as the patent licenses themselves. Over time, these negotiation-related file materials for agreements which my firm was involved with had to

be moved into off-site storage locations along with certain other files due in part to the space constraints we have, because there is such a limited need for access to these kinds of documents in our work.

179. Having said that, it should also be noted that our office does not have negotiation-related correspondence and drafts relating to numerous licensees and prospects which arguably would have been responsive to Highmark Request No. 18.

180. In 2004, Allcare produced the license agreement between Allcare and Providence, along with the other Allcare patent license agreements.

181. On July 29, 2004, Highmark deposed Mr. Shelton of Allcare. I was personally present for the deposition and have confirmed that the topics included the Providence license agreement and at least certain pre-agreement correspondence.

182. Highmark knew as of 2004 that while Allcare had produced approximately 30 patent license agreements, it had not produced all the pre-license negotiation-related correspondence or earlier drafts of license agreements between Allcare and its licensees, including Providence. And still, at no time in 2004, 2005 or 2006 did Highmark ever request a meet-and-confer about why Highmark believed that Allcare should withdraw its objection to searching for and producing this documentation (either globally or just the documentation specific to the Providence agreement).

183. Between 2004 and July of 2007, Highmark likewise never offered to reduce the scope of this request in return for access to a more limited set of correspondence and/or drafts.

184. Highmark states in proposed finding of fact no. 183 that "Highmark did not move to compel any of these financial documents because, in the absence of their production from Allcare, it was believed that neither Allcare or any expert it might hire could rely on such documents at trial. APP 759, ¶46." Apparently, Highmark made a tactical decision not to confer with Allcare about any perceived deficiency in any of Allcare's prior document productions because it believed Allcare would not be able to rely upon them. And in point of fact, Allcare never tried to rely upon any of the negotiation documents or unsigned drafts.

185. A review of the Sherwin report on Allcare's damages confirms that he never saw the Providence negotiation/draft documents in question as part of his undertaking to prepare his expert report.

186. Once Highmark reviewed the contents of the Sherwin Report, Highmark decided at that time that it wanted to see the pre-license correspondence between Allcare and Providence. Allcare served the Sherwin Report on June 30, 2007, and upon receiving Highmark's request for the correspondence relating to the negotiations, Allcare produced it to Highmark on or about July 10, 2007. Highmark's expert Mark Gleason was able to review these documents prior to issuing his rebuttal report on damages and he did not claim to have been prejudiced as a result of this production.

187. Highmark's proposed finding of fact no. 185 states, "After the close of discovery, Allcare served on Highmark the expert report of Mr. Robert A. Sherwin in support of Allcare's claim demand for $24.6 to $42 million as a 'reasonable' royalty. APP

43-44, 46; APP 48. Mr. Sherwin relied for his opinion as to a reasonable royalty, almost exclusively, on the licensing agreement between Allcare and Providence Health Plan. APP 41-43." (Emphasis added).

188. As the foregoing paragraph makes clear, Mr. Sherwin did not rely upon any documents such as unsigned drafts or negotiation-related materials which had not already been produced in the litigation. To the contrary, Mr. Sherwin relied upon the licensing agreement with Providence, which was produced to Highmark in 2004.

189. It is also worth noting that Highmark brought a motion to exclude Robert Sherwin on the Court-imposed deadlines for any motion to exclude experts. [Dckt No. 399] As mentioned previously, Highmark's motion was denied. [Dckt No. 484]

190. Highmark's proposed findings of fact 197-207 relate to supposed "bad faith" on my part concerning two expert reports on damages prepared by Creighton G. Hoffman in the *Trigon* case.

191. The first Hoffman report (HM App. 129-160) is replete with Trigon confidential business information.

192. On the other hand, the second Hoffman report focused more on Allcare's licensing activities and policies with far less emphasis on internal Trigon business practices and internal business information. See HM App. 116-128. As the inspection of the document reveals, there were so few references to Trigon confidential information that I could redact the report to protect Trigon confidential information without having to devote an inordinate or unreasonable amount of time to doing so. Id.

193. In April of 2003, I provided to Highmark a copy of the second Hoffman report in a redacted form to protect Trigon confidential information. As of March 2004, when Allcare responded to Highmark's initial requests for production, I believed that Allcare had provided all of Mr. Hoffman's reports to Highmark that it could provide without running afoul of the Trigon protective order. The *Trigon* protective order is HM App. 677-686.

194. In 2004, Magistrate Ramirez entered an order denying a motion by Highmark to compel Allcare to produce documents which were protected by the prior protective order in the *Cerner* case from disclosure. At that time, Magistrate Ramirez provided a protocol for Highmark to follow in seeking production of materials which were designated under prior judicial protective orders. [Dckt No. 302]

195. I had advised Highmark in 2004 that I could not provide the Hoffman Reports to Highmark without Trigon's approval because of issues relating to the protective order. By that time, I had already provided Highmark with a redacted copy of the second Hoffman report, and I did not believe that the first Hoffman report was capable of being redacted due to its heavy reliance upon materials designated confidential by Trigon.

196. Highmark did not request a meet and confer with me on the production of unredacted copies of the Hoffman reports in 2004, 2005 or 2006. However, in 2007, Highmark discussed with me potentially obtaining a copy of the first Hoffman report. In response, I referred Highmark to the protocol which Magistrate Ramirez had put in place relating to the *Cerner* protective order, which called

for Highmark to contact the lawyer for the party whose information was potentially at issue. See HM App. 381.

197. I had no reason to want to withhold the first Hoffman Report from Highmark. In fact, I specifically copied Trigon's counsel on my communications with Highmark counsel in the hopes of facilitating Trigon's agreement to the production of the first Hoffman report. See HM App. 381.

198. Highmark proposed finding of fact 203 states that I advised Highmark that with regard to the first Hoffman report, Mr. Hoffman did not cite to any Allcare documents in dealing with the prong of his analysis relating to Allcare licensing strategy. See HM App. 381. In fact, I said that and I believed it to be true. The prong of the first Hoffman report dealing with Allcare licensing strategy is found at HM App. 133, under the heading "*Georgia Pacific Factor 4*". There, Mr. Hoffman states that Allcare's licensing strategy is to license the '105 Patent broadly. Mr. Hoffman cites no Allcare documents therein.

199. At the time I authored the email which is HM App. 381, I was not aware that Allcare had inadvertently produced an unredacted copy of the first Hoffman report to Highmark. HM App. 129-160 was bates-labeled AHM 47373-47404 and produced to Highmark in 2004. A110.

200. This first Hoffman report should not have been produced to Highmark because of the *Trigon* protective order. When Highmark alerted me in 2007 to the fact of its production, I contacted Mark Ungerman, outside counsel to Trigon, and explained that the first Hoffman report had been inadvertently

produced to Highmark, but that it was produced in this case pursuant to this Court's judicial protective order such that Highmark was precluded from using the information for any purpose other than the instant litigation. Counsel for Highmark was not involved in these discussions because they related to Trigon business information and the *Trigon* protective order.

201. Highmark proposed findings of fact 204-207 show that Highmark is clearly confused over the difference between the first Hoffman report and the second Hoffman report. To be clear, Allcare probably should not have produced the first Hoffman report to Highmark, but it did so inadvertently in 2004. Allcare first produced the second Hoffman report in a redacted form to Highmark in 2003. Thus, by early 2004, Highmark was in possession of both the first and second Hoffman reports.

202. Highmark proposed finding of fact 204 states that I said Allcare was strictly prohibited from producing "the Hoffman Reports." (Emphasis added). This is not true. I never referred to multiple reports in HM App. 381. The "re: line" refers to a single "Report" as does the final paragraph of my email, which just confirms my earlier testimony that I believe I was talking only about the first Hoffman report in this particular email. The statement I made in 2007 (HM App. 381) was intended to be in the context of the first Hoffman report because as of this time: (a) I knew Highmark already had a redacted copy of the second Hoffman report; and (b) I was unaware at that time that the first Highmark report had already been produced to Highmark.

203. Highmark proposed finding of fact no. 205 states that I contradicted myself by providing Highmark a redacted copy of the second Hoffman report in April of 2003, and then later claiming that the first Hoffman report could not be produced (even though it already had been produced inadvertently without my knowing it) because of *Trigon* protective order. There is no contradiction here at all because these were two very different reports in terms of their sum and substance, and the extent to which each used or did not use Trigon confidential business information. Moreover, the first Hoffman report applied a methodology using Trigon confidential business information. The second Hoffman report was issued after Trigon's expert criticized the first Hoffman report's methodology because it was not what Allcare had used for licensing the '105 Patent; as a result, Hoffman's second report applied an alternative methodology relying almost exclusively upon Allcare business information. Allcare had no objection to providing Highmark the second report and its methodology because it could be done without divulging Trigon confidential information. However, that was not the case with the first Hoffman report.

204. Highmark proposed finding of fact 207 is further evidence of Highmark's confusion between the two Hoffman reports. In short, I never said that "the Hoffman Reports do not reference any Allcare documents." I said that the litigation strategy section of the first Hoffman report did not reference Allcare documents. And as shown above, a review of the first Hoffman report bears out the truth of my statement to that effect. Highmark cites the second Hoffman report (HM App. 116-128), which was produced to Highmark in April 2003, in support of

the proposition that the footnotes of the "Report" referenced Allcare documents. This is true. I would add that the reason Highmark knows this is because when I originally provided this second Hoffman report to Highmark, I did not redact any of the footnotes. I would further add that Highmark is wrong when it suggests that it was a breach of the protective order for Allcare to produce the second Hoffman report in this redacted form.

205. Highmark's proposed findings of fact 208-213 relate to Mr. Shelton's role in this litigation, and what I permitted him to do. By way of background, Mr. Shelton is the Vice President of Licensing for Allcare. As such, he is and has been involved in overseeing Allcare patent litigation during the entirety of my representation of Allcare.

206. Mr. Shelton is not an expert in health care information technology *per se*, but he is certainly experienced in matters relating to both patents and healthcare information technology. For example, he is the named inventor on several U.S. patents, two of which are in the healthcare information technology field. U.S. Pat. No. 6,345,260 by Mr. Shelton is entitled "Scheduling interface system and method for medical professionals." U.S. Pat. No. 7,028,049 by Mr. Shelton is entitled "Standing order database search system and method for internet and internet application" and pertains to electronic transmission of confidential patient records.

207. Mr. Shelton's experience in patent matters includes visits to sites of potential Allcare licensees to observe demonstrations of technology. I am aware of at least 4 different occasions when he has performed this function, not all of which were in

litigation. His work in patent litigation has included working with claim charts, where one goes through the contents of certain materials to look and see whether there is anything relevant to a given patent claim, and does so on an element-by-element basis.

208. During the *Trigon* case, Mr. Shelton prepared charts showing that he reviewed the Barber, Pritchard and Doyle patents cited during prosecution of the '105 Patent by the Patent Examiner, and he was able to find within these references the very same characteristics which Trigon was contending are present in the Bank One Medical Payment System. These charts helped to illustrate that the Bank One Medical Payment System was merely cumulative of the prior art references already before the Examiner. A reference which is merely "cumulative" of another is not material to patentability and need not be disclosed during prosecution.

209. In this case, Allcare again sought to use these charts, because they are helpful in pinpointing where certain described components of the Bank One Medical Payment System are also expressly described in the Barber, Pritchard and Doyle patents.

210. During the process of preparing expert reports, the charts originally created by Mr. Shelton were shown to Allcare expert Robert Gross, who reviewed them for accuracy. Mr. Gross concluded that there were no defects in the way that the charts communicated the contents of the Bank One Medical Payment System, as well as the Barber, Pritchard and Doyle patents.

211. I did not "permit" Mr. Gross to base his opinion on the foregoing charts. I asked Mr. Gross to review the charts in question and advise as to whether and to what extent his opinions differed from the charts in question. In response, Mr. Gross indicated that he had reviewed the materials in question and believed the charts were prepared in a manner that was both accurate and useful for illustrating that the Bank One Medical Payment System was cumulative of the features of the prior art patents reviewed by the Examiner during prosecution of the '105 Patent.

212. Highmark was permitted to depose Mr. Gross did not impeach him regarding any flaws in the contents of the charts in question.

213. Highmark also had the opportunity to brief the Special Master as to any perceived deficiencies in the charts at issue, but did not do so.

214. I disagree with the implied premise of Highmark's argument that because Mr. Shelton was not qualified as an "expert," his charts are of no merit. Ultimately, his charts provide, at a minimum, a demonstrative aid which permitted the Special Master to maneuver through the minutiae of several patents and compare their contents to features of the Bank One Medical Payment System, diagram with all due speed. There was nothing in the charts specifically that Highmark has asserted demonstrates any lack of candor with the Court in the contents of the charts.

215. Highmark's proposed finding of fact 213 states that "Mr. Shelton—not a lawyer or engineer—worked on equal footing with Mr. Hill, Allcare's counsel—not a patent lawyer or engineer—to develop

Allcare's position on the legal construction of the asserted claims of the '105 Patent. APP 378 ("Steve and I committed to turn around in 1 day the Joint Claims Statement draft that we received . . . In accordance with our agreement . . . you will note that we have moved Exhibits A and B . . .") (emphasis added)." I disagree with this statement. I also disagree with the implied premise of the statement that Allcare lacked sufficient support from persons skilled in the art of the technology of the '105 Patent. See Highmark Proposed Finding of Fact 233 (noting Allcare's use of as many as six experts).

216. The Joint Claims Statement was simply a device for presenting the claim construction contentions of both parties and presenting them to the Court in a manner that showed whether and to what extent the parties agreed on the construction of terms. If there was disagreement, the statement shows the respective contentions of the parties.

217. To the extent that Allcare needed to confer with experts to develop Allcare's position on the legal construction of the asserted claims of the '105 Patent, I had already done so prior to the preparation of the Joint Claims Statement. I specifically conferred with Stephen K. Holland, M.D. (an expert in medicine, health management, medical information technology and utilization review), Martin Kaliksi, Ph.D. (an electrical engineer), Gerald Kurtyka and Charles Singer (both experts in claims processing and medical payment systems) relating to separate aspects of Allcare's claim construction positions in this and prior cases. I did this in order to ensure that there was a reasonable and good faith basis for Allcare to take the positions which it took

regarding claim construction and infringement in this case.

218. In response to Highmark proposed finding of fact no. 213, Mr. Shelton sent the email in question (Highmark Appendix 378) with the draft Joint Statement attached at my behest because I was tied up on another project without access to email, and we were operating under an approaching filing deadline. The work reflected in the attachments to the email—additional formatting of the joint statement and modest proposed revision thereof—was either performed directly by me or at a minimum was done under my supervision and with my approval.

219. Highmark's proposed findings of fact 214-221 relate to my supposedly having held myself out as a "patent lawyer" at a hearing before the Special Master on Claim Construction. When I referred to myself as a "patent lawyer," it was an extemporaneous comment made in the midst of argument to the Special Master. I only meant it to communicate that I had experience with patents in litigation in federal court. I was not attempting to use the phrase as any sort of technical term of art.

220. I confess I was not aware of any regulation over the use of "patent lawyer." However, I have not engaged in bad faith or any attempt to mislead the Court at any time in this case. Referring to 37 C.F.R. 10.34, I have researched and have not found a single case stating that for a patent litigator in a hearing in a patent litigation case to refer to himself in a hearing as a "patent lawyer" is considered offensive.

221. In the context in which my statements were made, the Special Master was not misled to believe that I possessed any special knowledge about the '105 Patent. That is revealed in the context in which the statements were made. The first reference I made to the Special Master which is cited by Highmark in its proposed finding of fact no. 216 is one in which I expressly disclaimed any knowledge of the contents of the patent in suit because I was not a person of ordinary skill in the art. Highmark Appendix 335 ("for me as a patent lawyer who has no knowledge of health care whatsoever reading it...I'm not the one the person who the patent is referring to.).

222. The second reference cited by Highmark relates to a statement I made extemporaneously in the context of having had experience advising clients in numerous patent cases, and based on the experiences shared with me by other patent prosecution and patent litigation lawyers prior to the Federal Circuit's 2007 decision in *BMC v. Paymentech*. It was simply made as background before making a substantive argument relating to divided infringement theory, which is now governed by *BMC v. Paymentech* and its progeny. In fact, on this issue, Highmark, not Allcare, ultimately prevailed.

223. Regarding Highmark's proposed finding of fact 219, to the best of my recollection, I never told Joe Kendall I was a "patent lawyer" or "Allcare's patent lawyer" or other words to that effect

224. To the best of my knowledge, in five years of litigation in this case, neither the Special Master nor the Court has ever made a statement in this case

which in any way suggests that whether I was a "patent attorney" was in any way relevant to any judicial determination.

225. To the best of my knowledge, in five years of litigation in this case, neither the Special Master nor the court has ever made a finding in this case suggesting that I have ever attempted to mislead or misinform this Court. Likewise, I have never been sanctioned in any court in which I have appeared for violation of any rule of professional conduct or for any duty of candor owed to the Court.

226. Highmark's complaint for declaratory judgment in this case set forth three principal claims: (a) the '105 Patent is unenforceable due to inequitable conduct; (b) the '105 Patent is invalid due to either prior art or other reasons; and (c) Highmark does not infringe the '105 Patent [Dckt No. 119]

227. Highmark and Allcare devoted substantial time and resources to all three of these issues.

228. Although Highmark has not produced its billing invoices in this case, my expectation is that Highmark and its expert Dr. Nobel expended substantial resources relating to the pursuit of patent invalidity and unenforceability issues in this case. Among other things, Highmark searched for and produced to Allcare thousands of pages of prior art, detailed claim charts analyzing how the prior art reads on various claim limitations of Claims 1, 52, 53 and 102, and an expert report by Dr. Nobel addressing patent invalidity. A.67-79.

229. Highmark filed an early motion for summary judgment in this case addressing, among other things, patent invalidity arguments. [Dckt No. 134-135] This motion was denied as premature. [Dckt

No. 281] Highmark subsequently re-filed its motion for summary judgment. [Dckt No. 402] Approximately 16 pages of Highmark's motion for summary judgment were devoted to arguing that the '105 Patent is invalid based on prior art.

230. Key depositions relating to the prior art and other invalidity issues in this case included the depositions of Randall Heuler, Spencer Ryce, Highmark's 30(b)(6) representative, Lowell Starling, Rick DeBoard, Gerald Kurtyka, Dr. Nobel and Robert Gross.

231. Highmark devoted considerable effort to its pursuit of patent unenforceability, as evidenced by the fact that it filed a motion for summary judgment devoted to this issue. [Dckt. No. 146, 168, 169] This motion was denied as premature. [Dckt No. 281] Having considered Allcare's response on the merits, and the fact that Allcare had prevailed in the *Trigon* case on this identical issue [A57-62], Highmark opted not to re-file this motion.

232. Key depositions relating to the allegations of patent unenforceability in this race included the depositions of Desmond Cummings, John Sigalos, Andrew Hassell, Gerald Kurtyka and Robert Gross.

233. Highmark was not successful in obtaining any relief in this case on its claims relating to patent invalidity and patent unenforceability, as it ultimately withdrew these claims. [Dckt No. 506]

I declare under penalty of perjury that the foregoing is true and correct.

Executed this 6th day of January, 2009.

/s/ Steven G. Hill

From: Kernick, Cynthia E. [CKernick@ReedSmith.com]

Sent: Thursday, August 08, 2002 7:11 PM

To: Steven Hill

Subject: RE: Claim Chart

I meant it in the nicest way. It gave me a smile that you were being such a good advocate while at the same time being so pleasant. Right now I'm dealing with some guy in Texas who becomes hysterical every time anyone takes a position inconsistent with his (why someone like that gets into the practice of law is beyond me).

Anyway, its refreshing to work with (against?) someone who can press their client's interests in a fair and friendly manner. That's our job, isn't it? After the dreck I've deal with thoday, you've made my day better.

-----Original Message-----

From: Steve Hill [mailto:sgh@hklaw.org]

Sent: Thursday, August 08, 2002 6:59 PM

To: 'Kernick, Cynthia E.'

Subject: RE: Claim Chart

Fair enough. I know what you mean.

-----Original Message-----

From: Kernick, Cynthia E. [mailto:CKernick@ReedSmith.com]

Sent: Thursday, August 08, 2002 6:22 PM

To: 'sgh@hklaw.org,

Subject: RE: Claim Chart

I hope you'll understand when I say that that made me laugh. I'm sure I'll appreciate the artistry of the claim chart because I've already gotten a feel for your attention to detail and good lawyering, but whether I'll love it (on behalf of my client) is an entirely different question. :-)

-----Original Message-----

From: Steve Hill [mailto:sgh@hklaw.org] Sent: Thursday, August 08, 2002 6:19 PM To: 'Kernick, Cynthia E.'

Subject: RE: Claim Chart

Will do. You will love it when you see it.

-----Original Message-----

From: Kernick, Cynthia E. (mailto:CKernick@ReedSmith.com)

Sent: Thursday, August 08, 2002 5:06 PM

To: 'cgh@hklaw.org'

Subject: RE: Claim chart

Will do. I see that they managed to slow things down from what your expectations were. Perhaps when you produce to them on the 23rd, you'll copy me and then I'll have a little time to look at it before our call on the 26th.

Thanks.

-----Original Message-----

From: Steve Hill [mailto:sgh@hklaw.org]

Sent: Thursday, August 08, 2002 4:06 PM

To: 'Kernick, Cynthia E.'

Subject: RE: Claim Chart

Thanks for your query. We will be producing a claim chart on Aug. 23 per the hearing yesterday. Fact discovery ends Nov. 8. Then expert discovery will go through end of January with trial thereafter.

Please send me a copy of Exhibit 72A just in case we have misplaced ours.

Thanks.

Steven G. Hill
Hill & Kertscher, LLP
Overlook III
2859 Paces Ferry Road, Suite 750
Atlanta, GA 30339
770-953-0995 ext. 101
fax 770-953-1358

This email may contain confidential information or privileged information and is to be viewed only by its intended recipient. If you have received this message in error, please delete it and contact the sender. Thank you.

-----Original Message-----

From: Kernick, Cynthia E.
[mailto: CKernick@ReedSmith.com)

Sent: Thursday, August 08, 2002 10:05 AM

To: Steven G. Hill Esq. (E-mail)

Subject: Claim Chart

Steve:

I noticed today that the pretrial conference was held in the Trigon case by phone yesterday. Was there any determination that the claim charts would be produced soon? I know that you were hopeful that the exchange would start this week. Please let me know. If you've been able to share with Trigon the

claim chart, or will be doing so shortly, I'd appreciate seeing a copy.

thanks so much.

By the way, I dug back through all the stuff we got from the various courts and did find a copy of exhibit 72A so it does exist. Its a variant of the Bank One flow chart having a more defined characterization of the authorization process. If you are missing it, let me know and I'll send you a copy.

Cindy Kernick

Cynthia E. Kernick
412.288.4176
ckernick@reedsmith.com
Reed Smith LLP
James H. Reed Building
435 Sixth Avenue
Pittsburgh, PA 15219
412.288.3131
Fax 412.288.3063

This e-mail is confidential and may well be legally privileged. If you have received it in error, you are on notice of its status. Please notify us immediately by reply e-mail and then delete this message from your system. Please do not copy it or use it for any purposes, or disclose its contents to any other person. To do so could violate state and Federal privacy laws. Thank you for your cooperation. Please contact Cynthia E. Kernick at 412-288-4176 or ckernick@reedsmith.com if you need assistance.

UNITED STATES DISTRICT COURT
EASTERN DISTRICT OF VIGINIA
ALEXANDRIA DIVISION
C.A. NO. 02-756-A

ALLCARE HEALTH MANAGEMENT SYSTEM, INC.

Plaintiff,

v.

TRIGON HEALTHCARE, INC., et al.,

Defendants.

January 10, 2003
Before: Claude M. Hilton, Judge

HEARING ON MOTIONS

Appearances:

Michael J. Lockerby and Steven G. Hill, Counsel for Plaintiff

Mark Ungerman, Joseph P. Zammit, Michael J. Strauss, Jeannette D. Rogers and Steven War, Counsel for Defendants

* * *

today, and I then I will defer to Mr. Zammit on the motion to exclude the testimony of Mr. Hoffman,

THE COURT: All right.

MR. UNGERMAN: And what I would like to first focus on is that we have asked the Court to construe

certain limitations that are present in the claims in order to facilitate addressing the summary judgment motions that we have submitted. There are a couple of key limitations that I am going to focus on. I am going to try to be brief, I know we have a lot before us.

The first limitation, it appears in two separate formats basically, one format for the independent claim -- or for the apparatus claims, and another, format for the method claims. They are essentially the same.

And the apparatus claims read "means responsive to input of data symbolic of patient symptoms for tentatively identifying a proposed mode of treatment."

The method claims read essentially "entering through said input means into said data processor data symbolic of patient symptoms for tentatively identifying a proposed mode of treatment."

Both the apparatus claims and the method claims require a computer system in order to convert symptom data into a proposed mode of treatment.

We believe that the function is clear that a computer is required to take symptoms and to go from symptoms in order to generate a treatment. This function and structure is shown in the patent.

And actually let me just digress for one second. This patent is a fairly complex and detailed document. Much of it, as you can see from our brief, we believe is unclear. But it is, reading the patent specification, at the heart of what is required in order to be able to interpret these claims. And we

think that this one feature is the only explanation for the recited function.

The inventor confirmed this construction, and that is the computer going from symptoms to a proposed mode of treatment. Not a doctor manually entering a proposed mode of treatment. The inventor testified in his deposition numerous times and confirmed that, and we have attached a number of citations of his testimony to our briefs.

In addition, one of plaintiff's paid experts, a Dr. Holland, also confirmed that the steps in the method claims do require a computer for performing the function in question. We have also cited and attached a copy of his deposition.

The prosecuting attorney for this patent application was deposed in a prior litigation. And upon questioning by Mr. Hill, now plaintiff's counsel, the prosecuting attorney testified that it is the computer that makes the suggestion to the physician of the proposed mode of treatment. We have also attached that deposition page.

Now, once we have the claim construction, the second part of it is the summary judgment motion for noninfringement.

The Trigon systems do not perform this function. They do not use a computer to go from an input of symptoms to a proposed mode of treatment. The Trigon systems do accept a diagnosis code, which there has been some argument about. And they also accept a code for a proposed mode of treatment. But they do not use the diagnosis code, which in any event we don't believe is symptoms, to generate a proposed mode of treatment. It is a provider or a

physician that prescribes or identifies the proposed mode of treatment.

The plaintiffs have cited one example of a feature of the system which permits entry of a type of service, specifically maternity. And that is the only instance that they have cited, and have said that that qualifies as the symptom.

And our position is quite plain that legally maternity is not a symptom. Maternity is a condition rather than a symptom.

A second point that I would just touch on briefly is that we do not believe that the disclosure in the patent is sufficient to allow one of ordinary skill in the art to make a system which accepts an input of symptoms and generates a proposed mode of treatment. The computing processing power is simply not available today.

In response, plaintiffs have cited to only a single patent which was cited by the examiner, it is the Sinay patent, which is a system that was designed as a carry system for a paramedic for emergency medical situations where a paramedic can take a certain number of observations and put them into his little carry-on box and it will tell the paramedic what to do.

In the context of this invention, which is a comprehensive healthcare management system, that paramedic system is simply not sufficient to fill the gap or the discontinuity.

And the example I will give is that system is akin to putting a plank across a three-foot wide creek and saying that that's sufficient disclosure to explain to somebody of ordinary skill in the art how to build the

Golden Gate Bridge. And we just find that there is no argument that that system should be sufficient.

THE COURT: Well, what does your system deal with that doesn't deal with systems -- or symptoms?

MR. UNGERMAN: Symptoms. Our system is set up for preauthorizing inpatient hospital treatment. And in order to do that, the system requires entry of a DX code, a diagnosis code, and entry of a Px code, which is a procedure code.

There is a whole standard of codes that are established, ICD9. And you will see, I think I saw some charts here that address that. But these are diagnosis or disease codes. They are not symptoms.

THE COURT: So, the doctor puts in a diagnosis?

MR. UNGERMAN: Right.

THE COURT: Puts in the procedure he is going to use?

MR. UNGERMAN: Right.

THE COURT: Based upon that diagnosis, how he is going to treat it?

MR. UNGERMAN: Right.

THE COURT: And then what do you give him back? What does your system give the doctor back?

MR. UNGERMAN: Then that's submitted to the insurance company in order to preauthorize the admission.

So, it sends back to the doctor either a signal that, yes, you are preauthorized; or the alternative is a pend, which is a request for more information before the patient should be admitted.

Okay. The second feature of the claims that I want to address is the input means. And one aspect of this limitation both sides have agreed on, that the inputs means is a-- Actually two aspects. It is to be construed as a

* * *

this patent is not enforceable by reason of inequitable conduct. Inequitable conduct, as Your Honor knows, requires two elements: Materiality of a withheld reference or misrepresentation of fact, and intent of the parties involved.

First, on materiality. The reference in question is the Bank One reference. And that Bank One reference constitutes some significant prior art. It is reflected in two separate places: One is the single-page Bank One brochure that has been referred to, and it is attached more than one time to the various papers.

The second element of that prior art is the Kurtyka declaration, the 2000 Kurtyka declaration, which we attached as Exhibit M, M as in Mark, to our motion.

Excuse me. This reference shows a number of features which would have been important to an examiner in examining this application. It shows the incorporation of the patient's available cash balances.

Meaning. It shows taking deductibles or co-pays directly out of a patient's checking account and transferring them to a provider. That is a feature that was not shown in any of the references that were of record.

It also shows the application of the payment system of Bank One to managed care. The brochure itself refers to managed care.

And the declaration of Mr. Kurtyka shows a great deal of information about aspects of managed care and aspects of the patent that are not present in the prior art, including discussion of utilization review, electronic settlement of claims, adjudication and utilization review prior to or concurrent with the services.

These are all features that plaintiffs have argued are not shown in the Bank One one-page brochure, but in fact they are shown in the Kurtyka declaration.

And the reason, I just want to point out to the Court, that Mr. Kurtyka gave this declaration in connection with a prior piece of litigation, he was not paid to give that testimony. He was the person that was involved in promoting the Bank One system. And he freely gave this declaration and confirmed in his deposition in connection with this case that everything he said in that declaration was true and accurate.

Since that time, in connection with this piece of litigation, plaintiffs have retained Mr. Kurtyka as a paid expert and have submitted another declaration that does have some inconsistencies with his prior unpaid declaration.

Also important about that declaration is that it contains discussion that the information that he describes in his declaration was freely shared with those in the business at the time. And that time was prior to the filing of the patent in suit. And he shared that information with both the inventor and

with the assignee of the '105 patent, who at that time was Mr. William C. Connor.

And moving over-- So, we believe that that Bank One system information as reflected in both the declaration and in the brochure is of overwhelming materiality in this case.

Besides showing features in the claims, the patent itself included a statement that features which are present in that brochure were not available in the prior art. The patent describes that the prior art does not include or show inclusion of a patient's available cash balances.

Just moving over to the intent side of the prong. Cummings, the inventor, knew about the Bank One disclosure. And William Connor also knew about it. They both had meetings with Mr. Kurtyka.

Mr. Cummings expressed to Mr. Kurtyka that it was very similar to what he was doing. And Mr. Connor, we cited a memo dated 6/29, that the assignee confessed that there was not a clear line between what they, Lyons and Kurtyka, that's Bank One, were proposing and what we were proposing in the way of a healthcare card.

So, that demonstrates a high level of knowledge of the materiality of this.

The testimony is clear of the prosecuting patent where they are trying the advocate for a claim construction that simply suits their noninfringement position.

But in point of fact, we had agreed what "symptoms" are in advance. And what "data symbolic of patient symptoms" should be should not depend on this Court saying that they are not ICD9

codes. And that's exactly what Trigon is asking the Court to do.

We are simply pointing out that that is absolutely nonsensical. The specification states at Column 11, lines 32 through 36, it describes the process of entering ICD9 codes to describe the details of the incident, the reason for visit, the treatment, et cetera. The ICD9 coding system is broad enough to allow for that. It has symptom codes, diagnosis codes, condition codes, treatment codes and the like.

And that's the same system that Trigon has developed, is a system where the physicians enter ICD9 codes to summarize the details of the encounter. And then they package that, send it to Trigon along with a request for preauthorization for a hospital admission. And it includes things like the proposed length of stay.

The system will then send them back a response. And in some instances it will approve the treatment and provide them with a preauthorization number that can be used later on on the claim form when the doctor seeks reimbursement for the treatment that he has rendered.

On the other hand, it might also send back a pend or an incomplete. And when it does that, it will specify a reason. And there are numerous reasons. One of which is that the proposed treatment requires what's called appropriateness review, which is a form of utilization review. And we go into that in our briefs.

The third outcome which we point to in our brief and in our papers that we have submitted in support is where it sends back an approval, but changes the

length of stay that is approved for the hospitalization.

So, if you propose an inpatient maternity admission with a four-day length of stay, you might get an approval back, but it might only be for two days because the system knows that two days is a recognized medically acceptable time period for a normal delivery and accompanying hospitalization.

The first point that Mr. Ungerman makes is the most deadly from a standpoint of the risks in terms of claim construction. Because what he says right out of the gate is "means responsive to the input of data symbolic of patient symptoms for tentatively identifying a proposed mode of treatment," which we all agree is a means plus function term, is really similar to and should be construed identically to what the method claim describes as manually entering data

HIGHMARK V. ALLCARE
No. 2009-1065
TRANSCRIPT OF JULY 10, 2009
ORAL ARGUMENT

J. MICHEL: On the two case argument list, we'll hear argument first in Highmark vs. Allcare Health, Appeal 1065 from the present year. Mr. Hill, Good morning to you. Welcome to the Court. Please proceed.

MR. HILL: Thank you Your Honor. [short pause] Members of the Court. Good morning. My name is Steve Hill and I represent Allcare, the Appellant in this action. I reserve four minutes for rebuttal. I'll get straight to the issues this morning. As our brief lays out, summary judgment of non-infringement was granted at the district court level in this case for two reasons. First of all, it was held at the lower court that there was a lack of evidence from which a reasonable finder of fact could determine the practice of step 52(c) of Claim 52 which was the claim, the central independent claim, as to which infringement was alleged below. And secondly, the district court held that even if there was evidence that step 52(c) was performed, the step of entering data symbolic of patient symptoms was performed by Highmark's network

providers rather than Highmark itself, which is a healthcare insurance company, and as a result, uh, it found that there was insufficient evidence of direction or control to satisfy the holding of this Court in *BMC vs. Paymentech* for a threshold showing joint infringement.

J.MICHEL: In the claimed system, does the system propose a treatment?

MR. HILL: In the, uh, Are you referring to the claimed system in terms of the preferred embodiment of the 105 patent?

J. MICHEL: No, just...

MR. HILL: Or the accused...?

J. MICHAEL: No. The system as claimed. I'm not talking about the accused product.

MR. HILL: Yes.

J. MICHEL: I'm talking about the system as claimed. Does the system propose a treatment?

MR. HILL: Your Honor, in terms of the district court's finding, the system claim was Claim 1. And as to the system claim, the district court did hold...

J. MICHEL: No, Claim 52... Claim 52.

MR. HILL: In Claim 52, that is a method claim.

J. MICHEL: Right, but does the method include the computer proposing a treatment?

MR. HILL: No, Your Honor, not in terms of the computer reaching the first, um, identification of the proposed mode of treatment. It merely states that the entry of data symbolic of patients' symptoms is for tentatively identifying the proposed mode of treatment. At the lower court level during the claim construction hearing, it was argued by Highmark that the word "for," ought to have a limited construction to a cause/effect relationship, whereby you enter data symbolic of patients' symptoms into the system and the system in response effects a proposed mode of treatment. That was expressly rejected by the district court and Highmark...

J. DYK: Well, I'm not sure about that, at all, and I'm not sure it makes any difference anyway because this really seems as though it's a claim construction issue for us as to what the meaning of this claim is. And if the idea is that you have to enter the symptoms in order to get a proposed method of treatment, the evidence doesn't support an infringement under that claim construction, right?

MR. HILL: I would agree with the last part of Your Honor's statement; however, as to the predicate of Your Honor's statement, I would disagree that

infringement, or that the claim construction ought be revisited at this level, citing this Court's opinion in the *WMS Gaming vs. IGT* decision in 1999. This Court expressly stated that it was inappropriate to *sua sponte* revisit an agreed upon claim construction or a district court claim construction that was not properly preserved for appeal.

J. DYK: Yeah, but we have the *Lubrizol* case also in which that was done and, in any event, I don't think it's a question of revisiting the claim construction. I think that what happened here was that you had an initial claim construction from the Special Master which was then elaborated, if you will, in connection with the summary judgment decision.

MR. HILL: Well, Your Honor, if I might address that point. The claim construction never changed between the two points in time that Your Honor's referring to. It was always construed as "for the purpose of" or "with an aim to." And the question then becomes, when the step of entering the ICD 9 codes, as it were in this case, what is the purpose of that and in that context, we looked at what the proposed..., what is the proposed mode of treatment in the

accused system and Dr. Holland, Allcare's infringement expert...

J. DYK: But you don't enter the symptoms to get a proposed treatment. The proposed treatment in the accused system is entered separately. That's correct, isn't it?

MR. HILL: The, at a narrow level, your Honor, that is correct if you equate "procedure" and "treatment" to be the same thing as "proposed mode of treatment." But what we pointed out at the district court level and what the lower court disagreed with Dr. Holland on, which we contend was an inappropriate weighing of, of his expert testimony is that here the "proposed mode of treatment" was construed and agreed upon by the parties as being a tripartite, uh uh, plan, if you will, that it has to not merely be the identification of some procedure code in the abstract, but it has to be tied to a specific patient and it has to be tied to the combating of a disease or illness...

J. DYK: I don't know what you're, I can't understand what you are talking about. I'm sorry.

MR. HILL: Okay.

J. DYK: But it seems to me, you've got here, in the specification, descriptions of different systems where (1) you can enter the symptoms and get a

proposed mode of treatment and get that approved. Alternatively, you can have the physician enter the proposed mode of treatment and get that approved and that's reflected, for example, in Claim 102 where that describes a system which might be similar to the Highmark system where the physician enters the proposed mode of treatment and gets that approved. But for whatever reason you haven't sued for infringement of Claim 102. But I'm having difficulty understanding what your argument is as to how this accused system involves the entry of symptoms to get a proposed mode of treatment.

MR. HILL: Without the entry of symptoms into the authorization plan request form that Highmark utilized online in the accused system, you could not identify a proposed mode of treatment within the meaning of Claim 52.

J. MICHEL: Why not? I can't follow this. It's sort of a circular working here.

MR. HILL: Well, it's certainly not intentional, Your Honor. The reason is that a CPT code on a piece of paper or on an online form, by itself, and with no other data, would be insufficient to identify a proposed mode of treatment...

J. MICHEL: Why?

MR. HILL: ...the claim construction.

J. MICHEL: Exactly why?

MR. HILL: Because it would not identify that there was a patient in need of care.

J. MICHEL: Well that's another box on the form. It's still on the form who the patient is. It's on the form who the physician is and the physician types in the treatment by a numerical code number.

MR. HILL: Your Honor, our argument in the brief, it is that, that is certain, that is one plausible way of looking at it. However, our expert had an equally plausible way of looking at it, which was that even if what Your Honor just said is true, the proposed, the authorization plan in its entirety also satisfies the definition of a "proposed mode of treatment" that was adopted at the district court level because it satisfies the tripartite requirement of that claim. It identifies a specific procedure, it identifies a specific patient and it identifies a reason, i.e., a disease or injury in need of being combated.

J. MICHEL: I thought the issue here was who selects the treatment, the physician or the computer. Is that not right? Have I got that all totally mixed up?

MR. HILL: Your Honor, the issue at the district court was that the, was the question of whether or not the entry of data symbolic of patient symptoms was for the purpose of identifying...

J. MICHEL: Of course, we are trying to identify what "for" really means in the context of this claim limitation.

MR. HILL: And...

J MICHEL. And I am suggesting that what it does is to discriminate between where the computer, with its memory and its analytic capability, picks the treatment versus the situation where the physician picks the treatment before the physician even begins to type anything on to the form.

MR. HILL: Yes, Your Honor, but of course there is a wide body of case law that suggests that it's inappropriate, even at claim construction, to limit the, uh, to limit broader claim language to the specifics of any individual preferred embodiment. If...

J. MICHEL: I don't see this as an issue of limiting broad claim language or expanding narrow claim language. What we are trying to figure out is, in this context what does "for" mean.

MR. HILL: And it...

J. MICHEL: We have to do that. There is no way we can decide this case without

getting a sense of, in this context, what does the word "for" mean.

MR. HILL: And in this context...

J. MICHEL: And you're saying we are not allowed to do that because of some case law says we can't do that. That makes no sense to me at all. We can't avoid doing it. You're telling us we're not allowed to do it. I'm telling you, we can't avoid doing it.

MR. HILL: Your Honor, I agree with that and that work has already been done because the definition of "for" was expressly construed at the lower court.

J. MICHEL: Yeah, but it doesn't help me. It doesn't do any more than the naked word "for" to say it's "the purpose of" or whatever the other words were in the definition. It doesn't tell me in the context of this limitation, what significance does it have.

MR. HILL: Respectfully, Your Honor, I would disagree and would point to, to the fact that the purposeful requirement of "for" was sufficient to, to permit both experts to explain what the reasons were for entering data symbolic of patient symptoms. I see my time is expired, Your Honor, may I finish my response.

J. MICHEL: Yes, indeed.

MR. HILL: ...was sufficient to permit both the experts to opine on what the purpose of entering the data symbolic of patient systems was for and in that context, you had two competing views of what a proposed mode of treatment should be.

J. DYK: But the problem is, it's not for identifying a proposed mode of treatment, the entry of the symptoms. It doesn't do that, right, in the [Highmark] system?

MR. HILL: It doesn't, it doesn't in the cause and effect sense.

J. MICHEL: Well what, what other kind of meaning of the word "for" are you proposing if it's not to be cause and effect?

MR. HILL: We're proposing that it be purposeful in the sense of a necessary requirement to completing that identification. In other words, in other words...

J. MICHEL: You better put it in other words because I don't understand what you are saying.

MR. HILL: Fueling my car for driving around the street. I...that's a necessary prerequisite to being able to do it, but the fact that I fuel my car has not caused the effect of the car driving around the street necessarily.

J. MICHEL: Well certainly in some uses the word "for" that might be correct. But the issue in this case, is in *this* context of *this* claim limitation does "for" imply cause and effect or does it exclude cause and effect. You're saying it excludes cause and effect, I don't see where you get that. What is your basis of saying it excludes a cause and effect construction?

MR. HILL: Your Honor, respectfully, our position is not that it excludes cause and effect, it's simply that it's broader and can include more than merely cause and effect.

J. MICHEL. Alright, we'll restore your reserve rebuttal time and hear from Ms. Kernick.

MR. HILL: Thank you very much.

J. MICHEL. Thank you Mr. Hill.

MS. KERNICK: Good morning Your Honors. I'm Cynthia Kernick. I'm here on behalf of Highmark and the answer to your question is that, yes, it does require a cause and effect. The problem with Allcare's analysis of infringement is, it reads out the word "for," it reads out the word "identifying" and it substitutes the word "completing." And there is nothing in the patent that suggests that this claim element can be satisfied merely by including "data symbolic of symptoms" *with* a

"proposed mode of treatment" in the same form and somehow fulfill the limitations of this claim.

J. DYK: Why are we addressing infringement? Isn't there a substantial question as to whether this patent is valid under '101?

IN THE UNITED STATES DISTRICT COURT
FOR THE NORTHERN DISTRICT OF TEXAS
FORT WORTH DIVISION
CIVIL NO. 4:03-CV-1384-Y

HIGHMARK, INC.

Plaintiff,

v.

ALLCARE HEALTH
MANAGEMENT SYSTEMS, INC.

Defendant.

ORDER GRANTING MOTIONS TO WITHDRAW AND GRANTING MOTION FOR EXTENSION OF TIME

Before the Court are motions (docs. #570, 573) to withdraw as counsel filed by counsel for defendant Allcare Health Management Systems, Inc. ("Allcare"). In the motions, the law firms of Hill Kertscher & Wharton, LLP, and McKool Smith, PC, as well as individual attorneys Steven Hill, Mike McKool Jr., R. Darryl Burke, Christopher Harrington, Alfredo Silva, and Luke McLeroy seek leave to withdraw as counsel for Allcare.

The motions seek leave to withdraw based on a perceived conflict of interest argued to have been created by this Court's Opinion and Order Granting Motion for Exceptional-Case Finding and Attorneys' Fees (doc. #566). In that order, the Court concluded that Allcare's actions in this case warranted an exceptional-case finding under 35 U.S.C. § 285 and

that the actions of certain of Allcare's counsel, including the movants here, warranted sanctions under Federal Rule of Civil Procedure 11. According to the movants, these conclusions have created a conflict of interest between them and Allcare under Texas Disciplinary Rule of Professional Conduct 1.06(b)(2).

Rule 1.06(b)(2) provides in relevant part, "a lawyer shall not represent a person if the representation of that person . . . reasonably appears to be or become adversely limited by the lawyer's or the law firm's . . . own interests." Highmark insists that no conflict exits because under the terms of the Court's order Allcare will be held responsible for the exceptional-case finding under section 285 and its attorneys will not be required to pay for any amounts awarded to Highmark based on the finding. But Allcare could certainly argue that it engaged in the conduct on which the Court based the finding due to the advice of counsel, or lack thereof. Moreover, the Rule 11 sanctions imposed on Allcare's counsel played a role in the exceptional-case finding. As the Court noted in the opinion and order, conducting violating Rule 11 is the sort of conduct considered under section 285. *Brooks Furniture Mfg., Inc., v. Dutailier Int'l, Inc.*, 393 F.3d 1378, 1381 (Fed. Cir. 2005) (conduct that justifies exceptional-case finding includes "conduct that violates Fed. R. Civ. P. 11, or like infractions"). Given that Allcare's actions relevant to the exceptional-case finding cannot be separated from the advice and actions of its counsel, continued representation of Allcare appears to be against defense counsel's interests.

Highmark complains that allowing McKool Smith, Hill Kertscher & Wharton, and the individual attorneys to withdraw will leave Allcare without counsel. Because a corporation cannot represent itself in federal court, Allcare will need time to obtain new counsel and that new counsel will need time to become familiar with this case so that the briefing on the amount of the award based on the exceptional-case finding can proceed. *See Rowland v. Calif. Men's Colony*, 506 U.S. 194, 202 (1993). Indeed, Allcare has filed a motion for an extension of the briefing deadlines (doc. #572) to allow it to obtain new counsel. This, Highmark insists, will unduly delay this already protracted case. While the Court agrees that more delay is not desirable, it is nevertheless necessary so that defense counsel can be relieved of representing Allcare in conflict of interest and so that Allcare can obtain new counsel. Accordingly, the Court GRANTS the motions to withdraw.

In the motion for extension of time, Allcare requests sixty days to obtain new counsel. But Highmark's brief on the issue of the amount of fees to be awarded based on the exceptional-case finding has not yet been filed and, once filed, Allcare will have thirty days to file a response. Thus, sixty days from the date of this order is an unnecessarily long extension. The Court will GRANT Allcare's motion for extension but will grant Allcare fifteen additional days to file a response brief to Highmark's opening brief. Thus, Allcare will have forty-five days, in addition to the time remaining on Highmark's deadline to file its brief, to obtain new counsel and file its response.

SIGNED April 26, 2010.

/s/ Terry R. Means
TERRY R. MEANS
UNITED STATES
DISTRICT JUDGE

IN THE UNITED STATES DISTRICT COURT
FOR THE EASTERN DISTRICT OF VIRGINIA
ALEXANDRIA DIVISION
CIVIL ACTION 02-756-A

ALLCARE HEALTH
MANAGEMENT SYSTEM, INC.

Plaintiff,

v.

TRIGON HEALTHCARE, INC., et al.

Defendant.

MEMORANDUM OPINION

This matter comes before the Court on Defendants' Motion for Patent Claim Construction and Plaintiff's Cross-Motion for Claim Construction. The parties have asked this Court to construe numerous terms in the '105 patent as well as claims 52 and 55 in their entireties.

The basis of the '105 patent, found in Claim 1, is the automation of certain medical management responsibilities of a payer organization (i.e. insurer) with an input device at the provider's facility to permit the physician to propose treatments to payers at the point of patient care, and the combination of such a system with any of the known medical payment system.

The language of a patent's claims define the scope of the patented invention. See Hockerson-Halberstadt, Inc. v. Avia Group Int'l, Inc., 222 F.3d 951, 955 (Fed. Cir. 2000). Claim construction is

purely a matter of law, and summary judgment may not be avoided by an assertion that construction of the claims requires the determination of an underlying factual inquiry. See Cybor Corp. v. FAS Tech., Inc., 138 F.3d 1448, 1454-56 (Fed. Cir. 1998).

A claim is interpreted from the perspective of one ordinary skill in the art. See Hockerson-Halberstadt, 222 F.3d at 955. "Determining the limits of a patent claim requires understanding its terms in the context in which they were used by the inventor, considered by the examiner, and understood in the field of the invention." Toro Co. v. White Consol. Indus., Inc., 199 F.3d 1295, 1299 (Fed. Cir. 1999). When ascertaining the scope of the patent, a court begins with the claim language, then the specification (the drawings and written description), and then the prosecution history. See Vitronics Corp. v. Conceptronic, Inc., 90 F.3d 1576, 1582 (Fed. Cir. 1996). These intrinsic sources are "the most significant source[s] of the legally operative meaning of disputed claim language." See id. (citing Markman v. Westview Instruments, Inc., 52 F.3d 967, 979 (Fed. Cir. 1995)).

Courts construe terms in the claims according to their ordinary and accustomed meaning. See Johnson Worldwide Assoc. v. Zebco Corp., 175 F.3d 985, 989 (Fed. Cir. 1999). Additionally, when evaluating the meaning of claims terms, a court may not attempt to impose additional limitations that are simply characteristics of the inventor's written description of the preferred embodiment. See Dayco Prod., Inc. v. Total Containment, Inc., 258 F.3d 1317, 1325 (Fed. Cir. 2001). It is not a requirement that each claim of a patent possess all of the features of

its preferred embodiment. "An inventor must describe what he conceives to be the best mode [of his invention], but he is not confined to that [in terms of the coverage of the claims]." Continental Paper Bag Co. v. Eastern Paper Bag Co., 210 U.S. 405, 418 (1908).

Thus, in order to prevent improper claim construction, courts must first and foremost look to the plain meaning of the terms used in the patent. "Consulting the written description and prosecution history as a threshold step in the claim construction process, before any effort is made to discern the ordinary and customary meanings attributed to the words themselves, invites a violation of our precedent counseling against importing limitations into the claims." Texas Digital Sys., Inc. v. Telegenix, Inc., 308 F.3d 1193, 1204 (Fed. Cir. 2002).

The parties first seek the Court to interpret the meaning of the phrase "utilization review." Defendants contend that "utilization review" should refer only to a review to determine cost effectiveness. However, "utilization review" is generally understood to mean "the review of care by a managed care organization to ensure that medical services are medically appropriate or necessary." Because cost effectiveness alone does not drive "utilization review," this phrase instead is given its full and plain meaning.

The parties next seek interpretation of "comprehensive health management system" and "health care management system" which appear in the preamble of 67 claims of the '105 patent. Preamble terms do not limit the scope of a patent claim. See IMS Tech., Inc. v. Haas Automation, Inc.,

206 F.3d 1422, 1434 (Fed. Cir. 2001). "[T]he body of the claim fully and intrinsically sets forth the complete invention, including all of its limitations, and the preamble offers no distinct definition of any of the claimed invention limitations, but rather merely states, for example, the purpose or intended use of the invention." Pitney Bowes Inc. v. Hewlett-Packard Co., 182 F.3d 1298, 1305 (Fed. Cir. 1999). Because these terms are merely part of the preamble, they do not limit the scope of the '105 patent.

The term "indicia" is also at issue in this matter. On October 20, 2002, both parties filed a Joint Statement on Claim Construction (hereinafter "JSCC"), at which time they agreed that "indicia" would be given the dictionary definition of "identifying marks, indications." Based on both the JSCC as well as the ordinary meaning of "indicia," the term should be given the meaning "identifying marks."

The parties next seek the Court to define the term "data symbolic of patient symptoms." Again, the JSCC defines this term as "one or more items of information representative of a sign of disorder or disease." This is the plain and ordinary meaning of "data symbolic of patient symptoms," which should be given effect in the '105 patent.

The term "proposed mode of treatment" is also at issue. In the JSCC, the parties agreed that the phrase "proposed mode of treatment" means "a suggested method of the application of remedies or therapies to a patient for a disease or injury." This is the plain and ordinary meaning of the term, and

"proposed mode of treatment" should be given this definition.

The parties next seek the interpretation of the term "for." The Defendants seek to interpret "for" to exclusively represent a "cause and effect" relationship whereby entry of the data symbolic of symptoms causes the automatic tentative identification of a proposed mode of treatment. However, the plain and ordinary meaning of "for" is "corresponding to" or "with a view towards." Moreover, the parties agreed to the plain and ordinary meaning of "for" in the JSCC. As such, "for" should be given its plain and ordinary meaning.

The next term this Court must define is "preventing payment." Defendants proffer claims construction of this term to be a final, unconditional rejection of the payment. However, the plain and ordinary meaning of "preventing payment" is "keeping payment from being rendered." This term in its ordinary meaning is conditional, as stated in Claims 52 and 55, "until said utilization review has been obtained and data indicative thereof has been entered into said system."

This Court must next address the means plus function claims. Claims terms expressed in "means-plus-function" form require the Court to look to the patent specification in addition to the claim language itself for corresponding structural limitations recited therein. See 35 U.S.C. § 112 ¶ 6. Generally, a brief structural reference is sufficient to act as a qualifying structure provided it is meaningful and understood by a person of ordinary skill in the art as structure for performing the function of the claim. See William A. Budde v. Harley Davidson, 250 F.3d

1369, 1376-77 (Fed. Cir. 2001). The terms "input means," "payment means," "means for preventing payment," and "means for tentatively identifying a proposed mode of treatment" are means-plus-function claims which should be construed accordingly.

Regarding the term "input means," both parties agree that the function is "data input" and that the specification discloses that a "physician office terminal" performs this function. However, the parties dispute the meaning of "terminal." A person of ordinary skill in the art reading the word "terminal" in the specification would understand the reference to include a keyboard and a personal computer. The prosecution history of the '105 patent also shows that "terminal" was understood at the time to include personal computers. As such, the "physician office terminal" is not limited to a dumb terminal, but also includes keyboards and personal computers.

The next term at issue is "payment means." While the parties agree that the function of "payment means" is "payment," they do not agree what, if any, structure is disclosed in the specification for payment. Proper construction of a claim limitation looks to the "[d]isclosed structure [that] is described in a patent specification, including any alternative structures identified." Serrano v. Telular Corp., 111 F.3d 1578, 1583 (Fed. Cir. 1997). In this case, the specification adequately discloses two supporting structures, an algorithm found in Figure 8 of the '105 patent and "medical payment systems." Where a general-purpose computer alone is insufficient to perform the function at issue, an algorithm is valid

structure. See AIMS Gaming, Inc. v. International Game Tech., 184 F.3d 1339, 1348 (Fed. Cir. 1999). Here, the specification describes a distributed system programmed to perform automated funds transfer, and Figure 8 discloses the pertinent algorithm for performing this function. Additionally, the '105 patent discloses "medical payment systems" known in the prior art as a payment structure, and expressly references the titles of several patents illustrative of such prior art systems. This explicit reference to prior art fulfills the standards of disclosure for supporting structure for the term "payment means" under 35 U.S.C. § 112.

The parties next dispute whether the term "preventing payment" has adequate structure disclosed in the specification. As noted above, a person of ordinary skill in the art reading the '105 patent would recognize that the patent adequately discloses structure for preventing payment of a medical claim until data is entered into the system indicative of utilization review. Both the Figure 8 algorithm as well as the known "medical payment systems" disclosed in the '105 patent would be recognized by a person of ordinary skill in the art as supporting structure to determine whether to prevent payment.

The final means-plus-function term at issue is "means for ... tentatively identifying a proposed mode of treatment." The term refers to the non-final naming or recognition of a suggested method of treatment. The parties disagree as to whether the patent adequately discloses structures to perform this function. A reading of the '105 patent discloses a smart software program for utilization review and

procedure approval at 6:13-25, as well as two written software algorithms for such a system at 10:3-17 and 11:32-50. These smart systems disclosed in the '105 patent are sufficient to support the function of "tentatively identifying a proposed mode of treatment."

An appropriate order shall issue.

/s/ Claude M. Hilton
CHIEF UNITED STATES
DISTRICT JUDGE

Alexandria, Virginia
February 3, 2003

IN THE UNITED STATES DISTRICT COURT
FOR THE EASTERN DISTRICT OF VIRGINIA
ALEXANDRIA DIVISION
CIVIL ACTION 02-756-A

ALLCARE HEALTH
MANAGEMENT SYSTEM, INC.

Plaintiff,

v.

TRIGON HEALTHCARE, INC., et al.

Defendant.

ORDER

This matter comes before the Court on Defendants' Motion for Patent Claim Construction and Plaintiff's Cross-Motion for Claim Construction. For the reasons stated in the accompanying memorandum opinion, it is hereby,

ORDERED that Defendants' Motion for Patent Claim Construction is DENIED, and that Plaintiff's Cross-Motion for Claim Construction is GRANTED. It is further,

ORDERED as follows:

1. The terms "comprehensive health care management system" and "health care management system" are preamble terms that are not construed as claim limitations.

2. The term "utilization review" is construed to mean "the review of care by a managed care

organization to ensure that medical services are medically appropriate or necessary."

3. The term "indicia" is construed to mean "identifying marks."

4. The term "data symbolic of patient symptoms" is construed to mean "one or more items of information representative of a sign of disorder or disease."

5. The term "proposed mode of treatment" is construed to mean "a suggested method of the application of remedies or therapies to a patient for a disease or injury."

6. The term "for" is construed to mean "with a view to," "as concerns," or "corresponding to."

7, The term "preventing payment" is construed to mean "keeping payment from being rendered" and is only "until said utilization review has been obtained and data indicative thereof has been entered."

8. The term "input means" is governed by 35 U.S.C. § 112, and the general supporting structure is agreed as a "physician office terminal." A person of ordinary skill in the art would recognize that a terminal includes at least three structures: (a) small terminals (terminals with built in processing capabilities, such as personal computers), (b) keyboards, and (c) dumb terminals.

9. The term "payment means" is governed by 35 U.S.C. § 112, and a person of ordinary skill in the art reading the '105 patent would conclude that there are two structures that support the "payment means:" (a) the software algorithm for payment by electronic funds transfer located at FIG. 8, and; (b) a

"medical payment system," by which a person of ordinary skill would understand a computer specially programmed to receive claims (invoices from health care providers), adjudicate (process to a decision) the claims, and where appropriate, pay the claims by automating a check or transferring a file for electronic funds transfer.

10. The term "means ... for tentatively identifying a proposed mode of treatment [and] for preventing payment ..." is governed by 35 U.S.C. § 112. The '105 patent discloses a distributed computer processing system as the computer hardware necessary for the performance of these functions. The question is whether there is supporting software, algorithms or other structural disclosures to permit a person of ordinary skill in the art to specially program the computer to perform the functions of (a) tentatively identifying a proposed mode of treatment and (b) preventing payment.

11. The term "means for tentatively identifying a proposed mode of treatment" is a function construed in accordance with its plain and ordinary meaning as "non-final or provisional naming or recognizing of a suggested method of the application of remedies or therapies to a patient for a disease or injury." A person of ordinary skill in the art would find that there are two disclosed structures in the '105 patent for performing this function: (a) a "utilization review" or "procedure approval" smart system, as disclosed in 6:13-25, 10:3-17, and 11:32-50; and, (b) a diagnostic smart system, as disclosed in 6:56-67 and 9:53-65.

12. The term "preventing payment" is a function construed in accordance its plain and ordinary meaning as "keeping payment from happening." A

person of ordinary skill in the art would find that there are two disclosed structures in the '105 patent for performing this function: (a) the algorithm provided in Figure 8 (with accompanying test at 13:34-40), which is used in the computer system to program the system to review the contents of a claim for accuracy, where a problem with accuracy of the codes on the claim form prompts an off-line adjudication procedure in such an event; and (b) the "medical payment system," which is a specially programmed computer capable of keeping payment from happening as the result of the automated processing of a medical claim and was available commercially prior to 1991.

13. This Court does not require that the same structure for performing the function of "tentatively identifying a proposed mode of treatment" to be the same structure that performs the function of "preventing payment" in Claim 1(d) and other similarly worded claim elements.

14. Claim 52 is construed as follows:

52. A method of managing a comprehensive health care management system utilizing a data processor, data bank memories, input means and payment means comprising:	A method of managing a computer system that uses one or more computers and data repositories, physician office terminals including a keyboard or a personal computer in a health care provider location, and a payment means, properly construed to include at least one computer specially programmed as a medical payment system to automate a check or provide for electronic funds transfer to satisfy claims for medical services, comprising the following steps:
(a) entering into said data processor data identifying each of a predetermined plurality of persons;	(a) Introducing or inserting one or more items of information to establish the identity of an individual member from a group of two or more persons such as those with appropriate insurance or other basis for participation in a health care system.

(b) entering into one of said data bank memories an identification of predetermined procedures requiring utilization review;	(b) Introducing or inserting into a database procedures requiring utilization review, properly construed as a review of the medical appropriateness or necessity of care.
(c) entering through said input means into said data processor data symbolic of patient symptoms for tentatively identifying a proposed mode of treatment and, when said proposed mode of treatment includes one of said predetermined procedures requiring utilization review, producing indicia thereof; and	(c) Introducing or inserting through a physician office terminal including a keyboard or a personal computer in a health care provider location, one or more items of information representative of a sign of disorder or disease with a view toward, or corresponding to, provisionally putting forth a suggested method of the application of remedies or therapies to a patient for a disease or injury; and when the suggested method of such application of remedies or therapies to a patient for disease or injury includes a preselected medical services, treatment and/or testing

	procedure that requires utilization review, as properly construed above, causing to exist an identifying mark indicating the need for such utilization review.
(d) preventing payment therefor by said payment means until said utilization review has been obtained and data indicative thereof has been entered in said system.	(d) Keeping payment by the medical payment system from happening until utilization review, properly construed, is obtained and one or more items of information indicating that utilization review, properly construed, has been obtained is introduced or added into the computer system that includes the data processor, data bank memories, input means, properly construed, and the payment means, properly construed, described in the preamble of the claim.

15. Claim 55 is construed as follows:	
55. A method of managing a health care management system utilizing a data processor, data bank memories, input means and payment means comprising:	A method of managing a computer system that uses one or more computers and data repositories, physician office terminals including a keyboard or personal computer in a health care provider location, and a payment means, properly construed to include at least one computer specially programmed as a medical payment system to automate a check or provide for electronic funds transfer to satisfy proper claims for medical services, comprising the following steps:
(a) entering into said input means data identifying each of a predetermined plurality of persons;	(a) Introducing or inserting one or more items of information to establish the identity of an individual member from a group of two or more persons such as those with appropriate insurance or other basis for participation in a

	health care system.
(b) entering into one of said data bank memories an identification of predetermined items of medical history for said predetermined plurality of persons;	(b) Introducing or inserting to a database an identification of a unit of medical history, properly construed to include any of the items of information that are ordinarily found in a patient's medical records, including an initial screening of past disease and treatment by a physician, defined in advance to be recorded for the group of persons as such as those with appropriate insurance.
(c) entering into another of said data bank memories an identification of predetermined procedures requiring utilization review;	(c) Introducing or inserting into a database procedures requiring utilization review, properly construed to include a review of appropriateness or medical necessity of care.
(d) entering through said input means into said data processor data symbolic of patient symptoms for	(d) Introducing or inserting through a physician office terminal including a keyboard connected to a computer

tentatively identifying a proposed mode of treatment and, when said proposed mode of treatment includes one of said predetermined procedures requiring utilization review, producing indicia indicative thereof; and	from a physician office, one or more items of information representative of a sign of disorder or disease with a view toward, or corresponding to, provisionally putting forth a suggested method of the application of remedies or therapies to a patient for a disease or injury; and when the suggested method of such application of remedies or therapies to a patient for a disease or injury includes a pre-selected medical service, treatment and/or testing procedure that requires utilization review, properly construed, causing to exist an identifying mark indicating the need for such utilization review.
(e) preventing payment therefor until said utilization review has been obtained and data indicative thereof has been entered in	(e) Keeping payment from happening until utilization review, properly construed, is obtained and one or more items of

said system.	information indicating that utilization review, properly construed, has been obtained is introduced or added into the computer system that includes the data processor, data bank memories, input means, properly construed, and the payment means, properly construed, described in the preamble of the claim.

/s/ Claude M. Hilton
CHIEF UNITED STATES
DISTRICT JUDGE

Alexandria, Virginia
February 3, 2003

IN THE UNITED STATES DISTRICT COURT
FOR THE EASTERN DISTRICT OF VIRGINIA
ALEXANDRIA DIVISION
CIVIL ACTION 02-756-A

ALLCARE HEALTH
MANAGEMENT SYSTEM, INC.

Plaintiff,

v.

TRIGON HEALTHCARE, INC., et al.

Defendant.

MEMORANDUM OPINION

This matter comes before the Court on Defendants' Motion for Summary Judgment of Unenforceability, Invalidity and Noninfringement and Plaintiff's Motion for Partial Summary Judgment to Declare U.S. Patent No. 5,301,105 Enforceable. The parties seek to determine whether the '105 patent is enforceable on the basis of inequitable conduct; whether the '105 patent is valid on the bases of enablement and indefiniteness; and whether the '105 patent was infringed.

Prior to applying for U.S. Patent No. 5,310,105 (the "'105 patent"), Dr. Desmond D. Cummings, Jr., Ph.D., possessed a one-page marketing piece from 1989 describing the Bank One Medical Payments System (hereinafter "the MPS document"). Dr. Cummings provided the MPS document to William C. Conner, to whom he had granted an assignment of the rights in and to the U.S. Patent Application

Serial No. 07/683,032 (hereinafter "the '032 application"), which later matured into the '105 patent. Mr. Connor had also agreed to serve as the principal liaison with patent counsel while the '032 application was being prosecuted.

The patent attorneys have no recollection of the Bank One Medical Payment System and do not recall the MPS document. As a result, the attorneys did not include the MPS document in the Information Disclosure Statement (hereinafter "IDS") prepared on behalf of Dr. Cummings. Mr. Conner died in 1992 while the '032 application was being prosecuted.

During the preparation of the '032 application, the patent attorneys involved conducted a search for prior art leading to the discovery of several patents providing extensive disclosure of medical payment systems, including U.S. Patent No. 4,491,725 (hereinafter the "Pritchard patent") and U.S. Patent No. 4,858,121 (hereinafter the "Barber patent"). These patents were disclosed with the IDS and were available to the Patent and Trademark Office examiner in prosecuting the application leading to the issuance of the '105 patent.

Moreover, during the course of the '105 patent's prosecution, additional prior art references were reviewed by the Patent and Trademark Office (PTO), including a third medical payment system, U.S. Patent No. 4,916,611 (hereinafter the "Doyle patent"). However, at no time was the MPS document provided to the PTO during the prosecution of the '032 application.

Defendants claim that the failure to present the MPS document constituted a fraud upon the PTO,

and thus the law of inequitable conduct makes the '105 patent unenforceable.

Federal Rule of Civil Procedure 56 provides that summary judgment shall be granted if there is no genuine issue of material fact and that the moving party is entitled to judgment as a matter of law. Fed. R. Civ. P. 56(c); see also Anderson v. Liberty Lobby, Inc., 477 U.S. 242, 247 (1986). Once the moving party has demonstrated the absence of any genuine issue of material fact, the non-moving party must produce specific facts to establish the existence of each element of his claims and may not rest upon mere allegations or denials in his pleadings. See Matsushita Elec. Indus. Co. v. Zenith Radio Corn., 475 U.S. 574, 586-87 (1986).

To prevail on the charge that a patent is unenforceable by reason of inequitable conduct, a defendant must prove by clear and convincing evidence that the applicant failed to disclose material information or submitted false material information, and that such action was done with an intent to deceive the PTO. See Kingsdown Med. Consultants, Ltd. v. Hollister, Inc., 863 F.2d 867, 872 (Fed. Cir. 1988). A determination of inequitable conduct requires a court to inquire whether (1) the withheld or misrepresented information meets a threshold level of materiality and (2) the evidence shows a threshold level of intent to mislead the PTO. See Baxter Int'l., Inc. v McCaw Inc., 149 F.3d 1321, 1327 (Fed. Cir. 1998). If the evidence of materiality or intent does not rise to the level of clear and convincing evidence, then the inequitable conduct defense fails as a matter of law. See Monon Corp. v.

Stoughton Trailers, Inc., 239 F.3d 1253, 1261 (Fed. Cir. 2001).

In order for the withheld disclosure to be considered material, the Court must determine whether "there is a 'substantial likelihood that a reasonable examiner would consider it important in deciding whether to allow the application to issue as a patent.'" Halliburt v. Schlumberger Tech. Co., 925 F.2d 1435, 1440 (Fed. Cir. 1991) (quoting 37 C.F.R. § 1.56 (1989)). Information is material when it is not cumulative of information of record in the prosecution and (1) establishes by itself or in combination with other information, a prima facie case of non-patentability of a claim; or (2) the information refutes, or is inconsistent with a position application takes in asserting an argument of patentability before the PTO. See 37 C.F.R. § 1.156(b) (1992). Repetitive or redundant references need not be disclosed to the PTO, as cumulative prior art is immaterial by definition. See e.g. Engel Indus., Inc. v. Lockformer Co., 946 F.2d 1528, 1534 (Fed. Cir. 1991) ("[when a reference is cumulative to other prior art that was before the examiner, the element of materiality is not established, and inequitable conduct cannot lie"). "[A] reference need not be provided to the examiner if it is merely cumulative to or less material than other references before the examiner." Upjohn Co. v. Move Pharm. Corp., 225 F.3d 1306, 1312 (Fed. Cir. 2000).

In this case, the prior art of record consists of numerous patents, including the Doyle and Pritchard patents, which disclose in greater detail than the MPS document systems that adjudicate and pay medical claims. The simple disclosure of an element

of a claimed invention in a different prior art reference than those before the examiner does not render that reference material. Moreover, because of the Doyle patent and its explicit incorporation by reference of the entirety of the Pritchard patent, the Doyle patent describes all of the salient features and functions depicted in the MPS document in similar, if not identical terms. The fact that the MPS document was not reviewed by the PTO is not sufficient to support a finding of inequitable conduct because its contents were replicated in more detailed references that were considered by the examiners. As such, the MPS document was not material.

Additionally, the evidence fails to show by clear and convincing evidence a threshold level of intent to mislead the PTO. "Intent to deceive cannot be inferred solely from the fact that information was not disclosed; there must be a factual basis for a finding of deceptive intent." Herbert v. Lisle Corp., 99 F.3d 1109, 1116 (Fed. Cir. 1996). The evidence fails to show that Dr. Cummings, Mr. Conner, or the patent attorneys acted to intentionally withhold the MPS document from the PTO; the evidence points to an oversight rather than intentional deceit by clear and convincing proof. Because there is no evidence of materiality or intent to mislead, there is no proof of inequitable conduct and thus the '105 patent is enforceable.

Defendants also seek summary judgment on the basis of invalidity, arguing that (1) the specification's disclosure of a diagnostic smart system fails to provide sufficient information to enable one of ordinary skill to construct such a system and (2) the terms of the '105 patent claims are indefinite. "The

purpose of the enablement requirement is to 'ensure that the public knowledge is enriched by the patent specification to a degree at least commensurate with the scope of the claims.'" Crown Operations Int'l, Ltd. v. Solutia Inc., 289 F.3d 1367, 1379 (Fed. Cir. 2002) (quoting National Recovery Tech., Inc. v. Magnetic Separation Sys., 166 F.3d 1190, 1196 (Fed. Cir. 1999)). To be enabling, the specification in the patent "must teach those skilled in the art how to make and use the full scope of the claimed invention without 'undue experimentation.'" Union Carbide Chem. & Plastics Tech. Corp. v. Shell Oil Co., 308 F.3d 1167, 1185 (Fed. Cir. 2002) (internal citation omitted).

However, a patent applicant need not include in the specification that which is already known to and available to the public. See Paperless Accounting, Inc. v. Bay Area Rapid Transit Sys., 804 F.2d 659, 664 (Fed. Cir. 1986). Moreover, inventors are encouraged to omit what is known to those persons of skill in the art of the invention. See Hybritech, Inc. v. Monoclonal Antibodies, Inc., 802 E.2d 1367, 1384 (Fed. Cir. 1986).

In this matter, a number of U.S. patents which taught the use of computers to correlate symptoms, diagnosis, and treatment, were researched and disclosed to the PTO during the prosecution of the '105 patent. For example, U.S. Patent No. 4,290,114 (the "Sinay patent") issued in 1976 disclosed a computer aided health care system which diagnosed a patient's illness and indicated appropriate treatment, and was considered by the examiner during the '105 patent prosecution. Reading such prior art, the examiner was compelled to conclude

that diagnostic smart systems, including those that go from symptoms to treatments, were within the ordinary knowledge of skilled computer programmers. Because diagnostic smart systems were known to persons skilled in the art at the time of the '105 patent prosecution, the '105 patent claims are enabling and thus valid.

Under patent law, "first, [the claim] must set forth what 'the applicant regards as his invention,' and second, it must do so with sufficient particularity and distinctness, i.e., the claim must be sufficiently 'definite.'" Solomon v. Kimberly-Clark Corp., 216 F.3d 1372, 1377 (Fed. Cir. 2000). The issue of definiteness is one decided by the court as a matter of law. See Personalized Media v. International Trade Comm'n, 161 F.3d 696, 702-03 (Fed. Cir. 1998) (quoting 35 U.S.C. § 112 ¶ 2). Whether a claim is invalid for indefiniteness requires a determination of whether one skilled in the art would be able to discern the scope of the claim "when read in light of the specification." Orthokinetics, Inc. v. Safety Travel Chairs, Inc., 806 F.2d 1565, 1576 (Fed. Cir. 1986).

Whether a limitation is defined as a means-plus-function limitation is also a question of law. Personalized Media Communs., L.L.C. v. International Trade Comm'n, 161 F.3d 696, 702 (Fed. Cir. 1998). Construing a means-plus-function limitation requires that the function recited in the claim be determined and then the specification be examined to determine the identity of the corresponding structure. See Cardiac Pacemakers, Inc. v. St. Jude Medical, Inc., 296 F.3d 1106, 1113 (Fed. Cir. 2002). "In order to qualify as

corresponding, the structure must not only perform the claimed function, but the specification must clearly associate the structure with performance of the function." Id. If the inquiry fails to reveal the corresponding structure, the claim is indefinite under 35 U.S.C. § 112, paragraph 2. Id. at 1114.

Defendants have argued that the claim terms "comprehensive health care management system," "payment means," "indicia," "means for preventing payment," and "proposed mode of treatment" are indefinite as a matter of law, and thus the 1105 patent should be found invalid. However, there is expert testimony before this Court that the terms are definite to sufficiently apprise those skilled in the art of the scope of the invention. Moreover, this Court has already found these terms to be definite in its Order on the '105 patent claim construction.

Finally, the Defendants seek summary judgment on the basis of non-infringement. However, there are genuinely disputed issues of material fact that remain going to the issue of infringement. Therefore, summary judgment is inappropriate.

Based on a review of the evidence, the MPS document was cumulative and therefore not material; as such, Defendants' inequitable conduct argument should fail and Plaintiff correctly asserts that the '105 patent is enforceable. Furthermore, the claim language at issue is specific enough to make the '105 patent valid. Finally, because there are genuine issues of material fact in dispute, summary judgment is improper on the question of infringement. For these reasons, Plaintiff's Motion for Partial Summary Judgment to Declare U.S. Patent No 5,301,105 Enforceable should be granted,

and Defendants' Motion for Summary Judgment of Unenforceability, Invalidity, and Noninfringement should be denied.

An appropriate order shall issue.

/s/ Claude M. Hilton
CHIEF UNITED STATES
DISTRICT JUDGE

Alexandria, Virginia
February 3, 2003

IN THE UNITED STATES DISTRICT COURT
FOR THE EASTERN DISTRICT OF VIRGINIA
ALEXANDRIA DIVISION
CIVIL ACTION 02-756-A

ALLCARE HEALTH
MANAGEMENT SYSTEM, INC.

Plaintiff,

v.

TRIGON HEALTHCARE, INC., et al.

Defendant.

ORDER

This matter comes before the Court on Defendants' Motion for Summary Judgment of Unenforceability, Invalidity and Noninfringement and Plaintiff's Motion for Partial Summary Judgment to Declare U.S. Patent No. 5,301,105 Enforceable. For the reasons stated in the accompanying memorandum opinion, it is hereby,

ORDERED that Defendants' Motion for Summary Judgment of Unenforceability, Invalidity and Noninfringement is DENIED, and that Plaintiff's Motion for Partial Summary Judgment to Declare U.S. Patent No. 5,301,105 Enforceable is GRANTED.

/s/ Claude M. Hilton
CHIEF UNITED STATES
DISTRICT JUDGE

Alexandria, Virginia
February 3, 2003

...ORD
...ND
BRIEFS

Supreme Court, U.S.
FILED
DEC 2 - 2013
OFFICE OF THE CLERK

No. 12-1163

IN THE

Supreme Court of the United States

HIGHMARK INC.,

Petitioner,

v.

ALLCARE HEALTH MANAGEMENT SYSTEMS, INC.,

Respondent.

On Writ of Certiorari to the United States Court of Appeals for the Federal Circuit

SUPPLEMENTAL JOINT APPENDIX

NEAL KUMAR KATYAL
Counsel of Record
for Petitioner
DOMINIC F. PERELLA
DAVID M. GINN
R. CRAIG KITCHEN*
AMANDA K. RICE*
JONATHAN D. SHAUB*
HOGAN LOVELLS US LLP
555 13th Street, NW
Washington, DC 20004
(202) 637-5600
neal.katyal@hoganlovells.com

*Not admitted in DC; supervised by members of the firm

DONALD R. DUNNER
Counsel of Record
for Respondent
DON O. BURLEY
JASON W. MELVIN
CORA R. HOLT
FINNEGAN, HENDERSON, FARABOW, GARRETT & DUNNER, LLP
901 New York Avenue, NW
Washington, DC 20001
(202) 408-4000
don.dunner@finnegan.com

(additional counsel listed on inside cover)

PETITION FOR CERTIORARI FILED MARCH 25, 2013
CERTIORARI GRANTED OCTOBER 1, 2013

Library of Congress
Law Library

Additional counsel
for petitioner:

CYNTHIA E. KERNICK
JAMES C. MARTIN
THOMAS M. POHL
REED SMITH LLP
225 Fifth Avenue
Pittsburgh, PA 15222
(412) 288-3131

Additional counsel
for respondent:

ERIK R. PUKNYS
FINNEGAN, HENDERSON,
FARABOW, GARRETT &
DUNNER, LLP
3300 Hillview Avenue
Palo Alto, CA 94304
(650) 849-6600

TABLE OF CONTENTS

Page

U.S. Patent No. 5,301,105 ..... SA1

US005301105A

United States Patent [19]

Cummings, Jr.

[11] Patent Number: 5,301,105

[45] Date of Patent: Apr. 5, 1994

[54] ALL CARE HEALTH MANAGEMENT SYSTEM

[75] Inventor: Desmond D. Cummings, Jr., 2309 Orchard Dr., Apopka, Fla. 32715

[73] Assignee: Desmond D. Cummings

[21] Appl. No.: 683,832

[22] Filed: Apr. 8, 1991

[51] Int. Cl.[5] G06F 7/00

[52] U.S. Cl. 364/401; 364/406; 364/408

[58] Field of Search 364/401, 406, 408

[56] References Cited

U.S. PATENT DOCUMENTS

3,697,693	10/1972	Deschenes et al. .	
4,290,114	9/1981	Sharp	364/900
4,491,725	1/1985	Pritchard	235/375
4,648,037	3/1987	Valentino	364/408
4,797,543	1/1989	Watanabe	235/492
4,858,121	8/1989	Barber et al.	364/406
4,916,611	4/1990	Doyle, Jr. et al.	364/401
5,018,067	5/1991	Mohlenbrock et al.	364/413.02

OTHER PUBLICATIONS

Excerpt from Mesa Petroleum, Company. Mesa Solution Magazine entitled "Corporate America At Risk" Pages four through eleven.

Primary Examiner—Roy N. Envall, Jr.
Assistant Examiner—Gita D. Shingala

[57] ABSTRACT

A fully integrated and comprehensive health care system that includes the integrated interconnection and interaction of the patient, health care provider, bank or other financial institution, insurance company, utilization reviewer and employer so as to include within a single system each of the essential participants to provide patients with complete and comprehensive pre-treatment, treatment and post-treatment health care and predetermined financial support therefor.

102 Claims, 9 Drawing Sheets

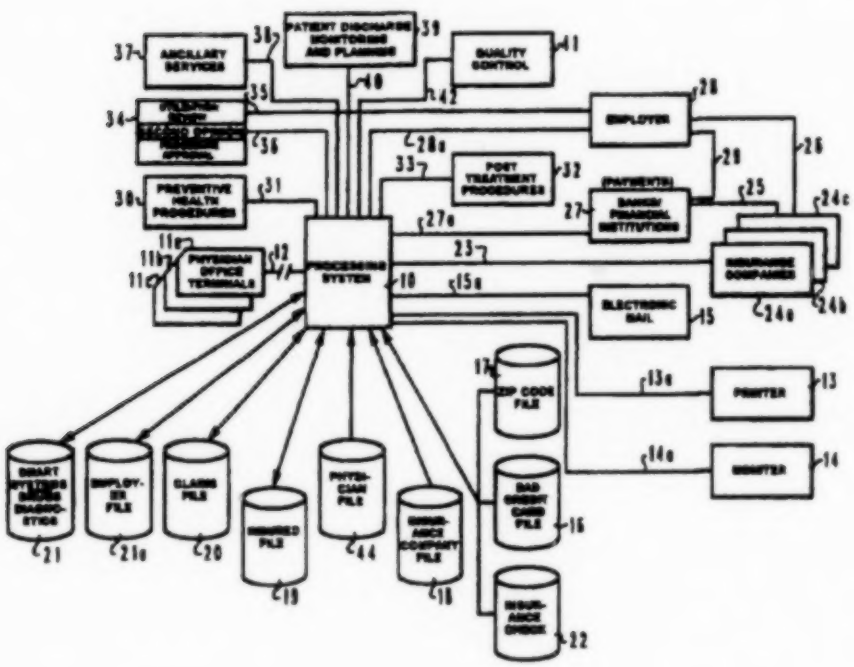

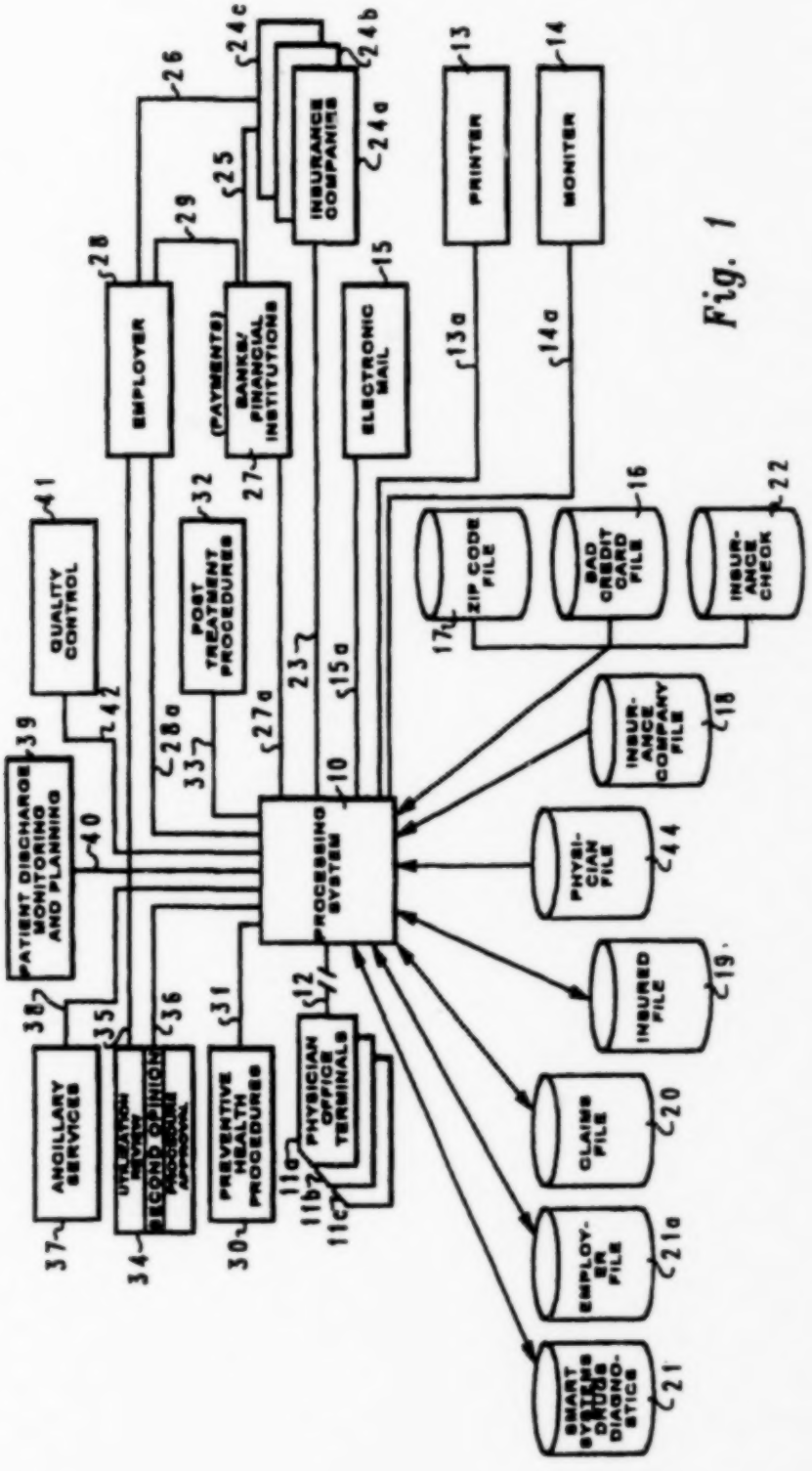
PROCESSING SYSTEM
PATIENT DISCHARGE MONITORING AND PLANNING
QUALITY CONTROL
EMPLOYER
(PAYMENTS)
BANKS/ FINANCIAL INSTITUTIONS
INSURANCE COMPANIES
ELECTRONIC MAIL
PRINTER
MONITER
POST TREATMENT PROCEDURES
ZIP CODE FILE
BAD CREDIT CARD FILE
INSUR-ANCE CHECK
INSUR-ANCE COMPANY FILE
PHYSI-CIAN FILE
INSURED FILE
CLAIMS FILE
EMPLOY-ER FILE
SMART SYSTEMS DRUGS DIAGNO-STICS
ANCILLARY SERVICES
UTILIZATION REVIEW
SECOND OPINION PROCEDURE APPROVAL
PREVENTIVE HEALTH PROCEDURES
PHYSICIAN OFFICE TERMINALS

Fig. 1

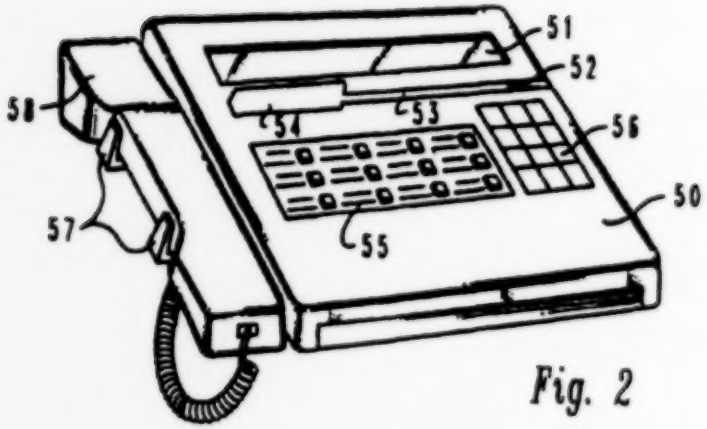
51
52
53
54
56
58
57
55
50

Fig. 2

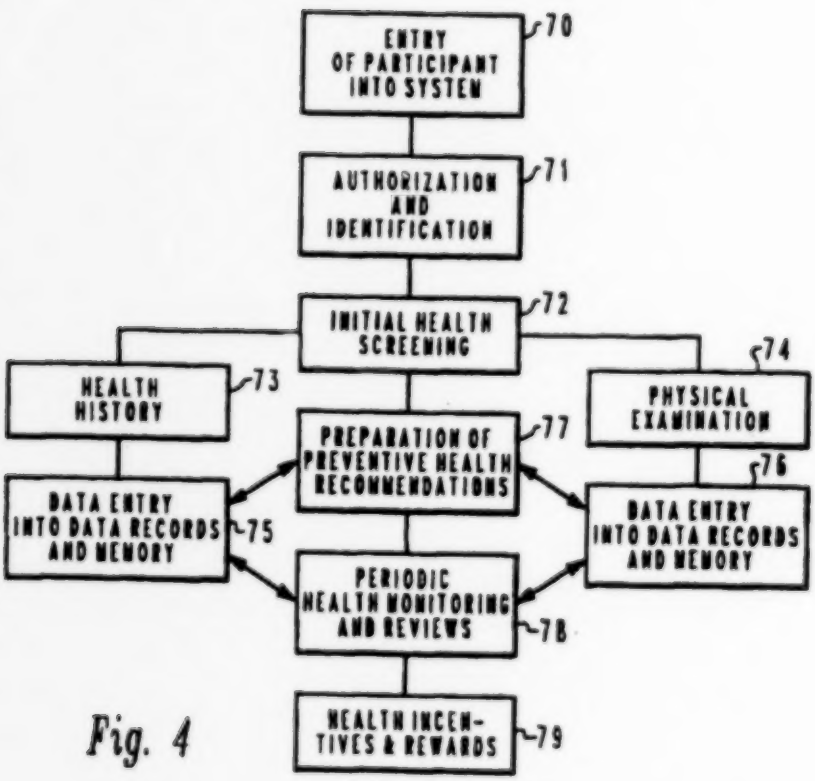
ENTRY OF PARTICIPANT INTO SYSTEM
70
AUTHORIZATION AND IDENTIFICATION
71
INITIAL HEALTH SCREENING
72
HEALTH HISTORY
73
PHYSICAL EXAMINATION
74
PREPARATION OF PREVENTIVE HEALTH RECOMMENDATIONS
77
DATA ENTRY INTO DATA RECORDS AND MEMORY
75
DATA ENTRY INTO DATA RECORDS AND MEMORY
76
PERIODIC HEALTH MONITORING AND REVIEWS
78
HEALTH INCENTIVES & REWARDS
79

Fig. 4

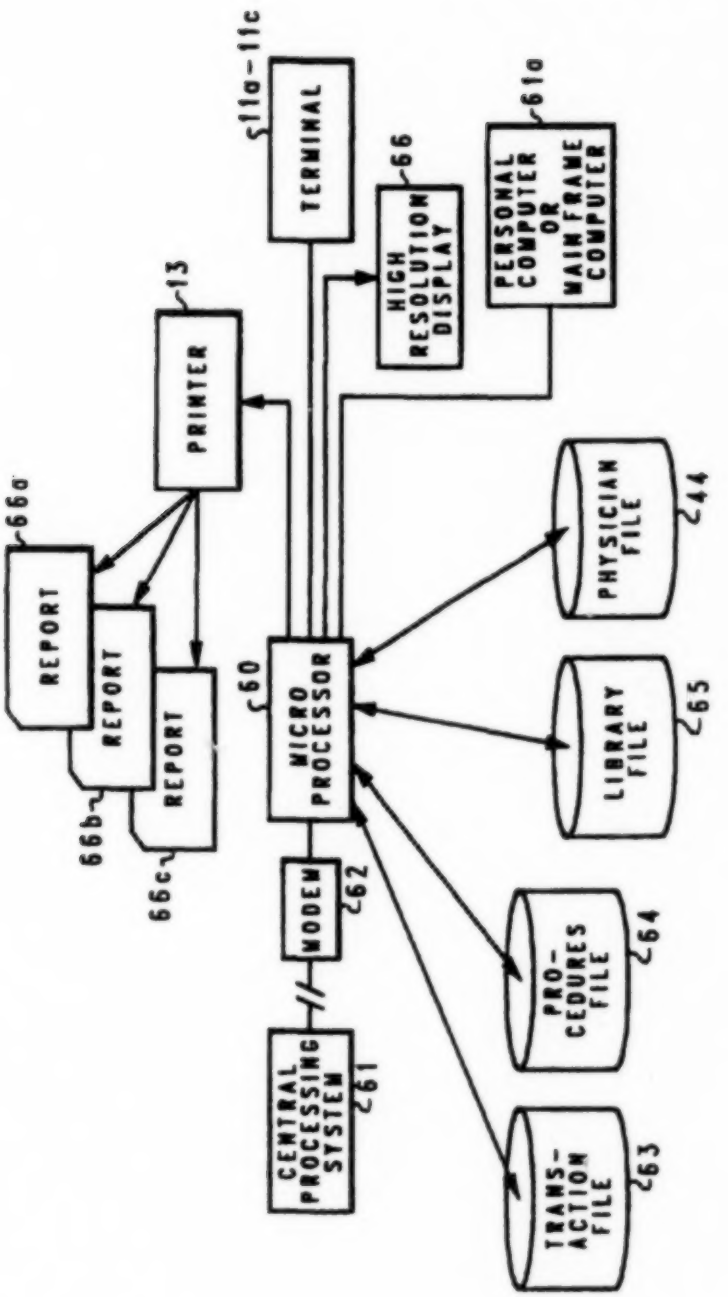
11a–11c
TERMINAL
66
HIGH RESOLUTION DISPLAY
61a
PERSONAL COMPUTER OR MAIN FRAME COMPUTER
13
PRINTER
66a
REPORT
66b
REPORT
66c
REPORT
60
MICRO PROCESSOR
62
MODEM
61
CENTRAL PROCESSING SYSTEM
44
PHYSICIAN FILE
65
LIBRARY FILE
64
PRO-CEDURES FILE
63
TRANS-ACTION FILE

Fig. 3

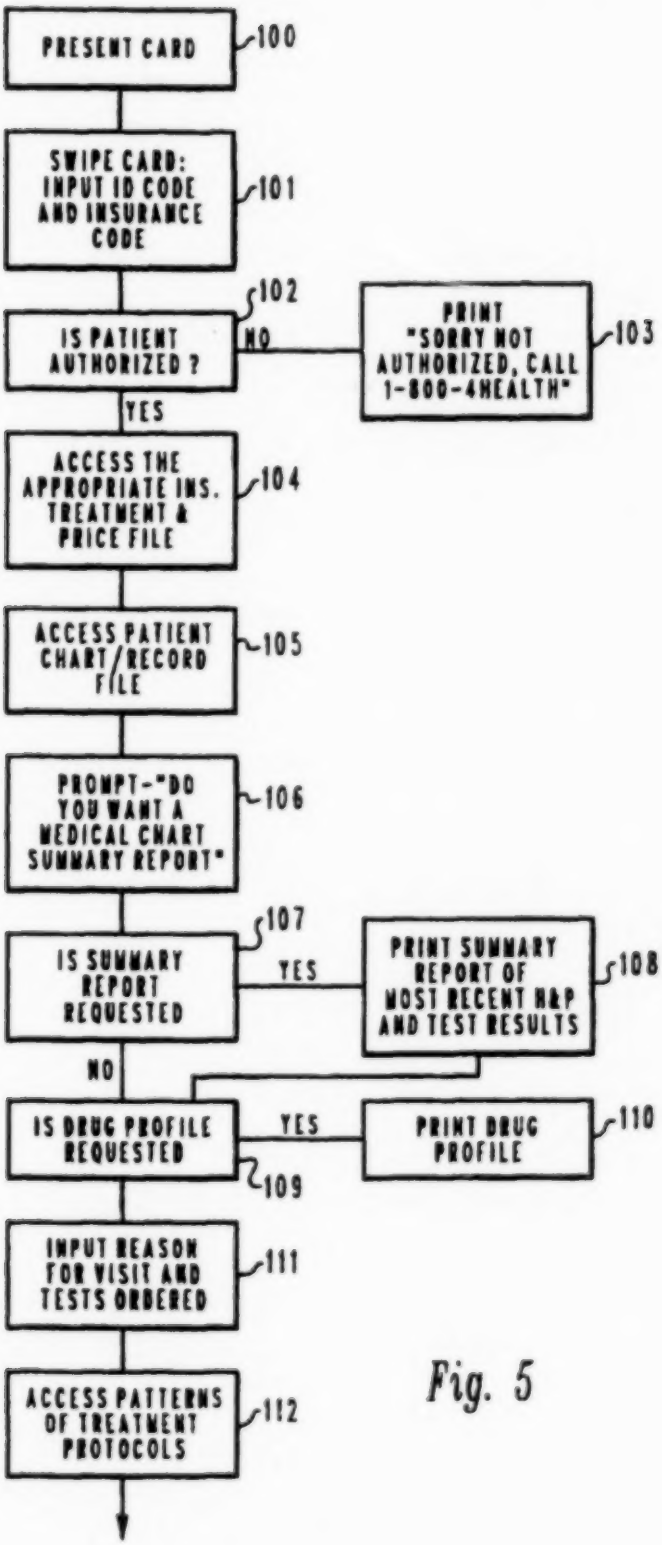
PRESENT CARD
100
SWIPE CARD: INPUT ID CODE AND INSURANCE CODE
101
IS PATIENT AUTHORIZED ?
102
NO
PRINT "SORRY NOT AUTHORIZED, CALL 1-800-4HEALTH"
103
YES
ACCESS THE APPROPRIATE INS. TREATMENT & PRICE FILE
104
ACCESS PATIENT CHART/RECORD FILE
105
PROMPT-"DO YOU WANT A MEDICAL CHART SUMMARY REPORT"
106
IS SUMMARY REPORT REQUESTED
107
YES
PRINT SUMMARY REPORT OF MOST RECENT H&P AND TEST RESULTS
108
NO
IS DRUG PROFILE REQUESTED
109
YES
PRINT DRUG PROFILE
110
INPUT REASON FOR VISIT AND TESTS ORDERED
111
ACCESS PATTERNS OF TREATMENT PROTOCOLS
112

Fig. 5

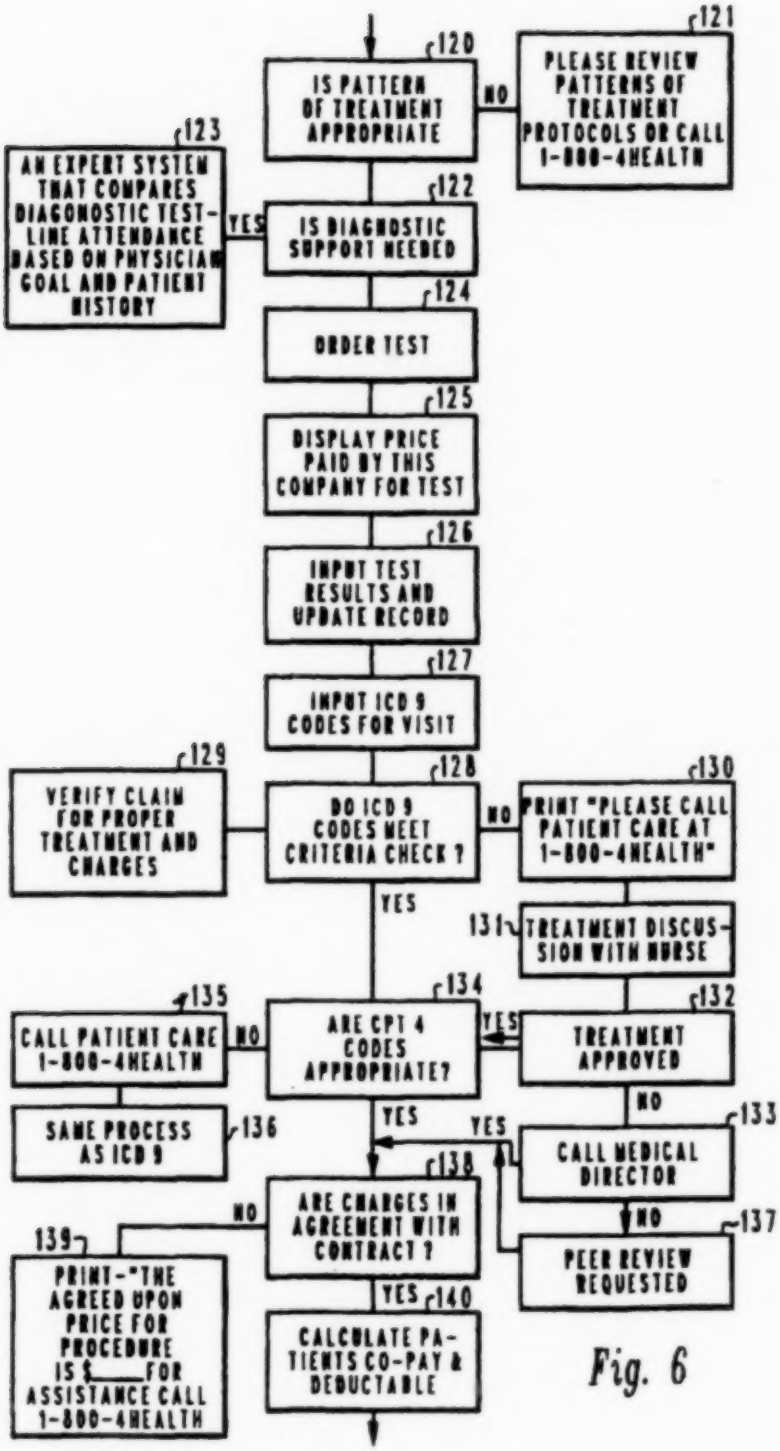
120
IS PATTERN OF TREATMENT APPROPRIATE
NO
121
PLEASE REVIEW PATTERNS OF TREATMENT PROTOCOLS OR CALL 1-800-4HEALTH
123
AN EXPERT SYSTEM THAT COMPARES DIAGONOSTIC TEST-LINE ATTENDANCE BASED ON PHYSICIAN GOAL AND PATIENT HISTORY
YES
122
IS DIAGNOSTIC SUPPORT NEEDED
124
ORDER TEST
125
DISPLAY PRICE PAID BY THIS COMPANY FOR TEST
126
INPUT TEST RESULTS AND UPDATE RECORD
127
INPUT ICD 9 CODES FOR VISIT
129
VERIFY CLAIM FOR PROPER TREATMENT AND CHARGES
128
DO ICD 9 CODES MEET CRITERIA CHECK ?
NO
130
PRINT "PLEASE CALL PATIENT CARE AT 1-800-4HEALTH"
YES
131
TREATMENT DISCUSSION WITH NURSE
135
CALL PATIENT CARE 1-800-4HEALTH
NO
134
ARE CPT 4 CODES APPROPRIATE?
YES
132
TREATMENT APPROVED
SAME PROCESS AS ICD 9
136
YES
NO
YES
133
CALL MEDICAL DIRECTOR
138
ARE CHARGES IN AGREEMENT WITH CONTRACT ?
NO
139
PRINT-"THE AGREED UPON PRICE FOR PROCEDURE IS $____FOR ASSISTANCE CALL 1-800-4HEALTH
YES
140
CALCULATE PATIENTS CO-PAY & DEDUCTABLE
NO
137
PEER REVIEW REQUESTED

Fig. 6

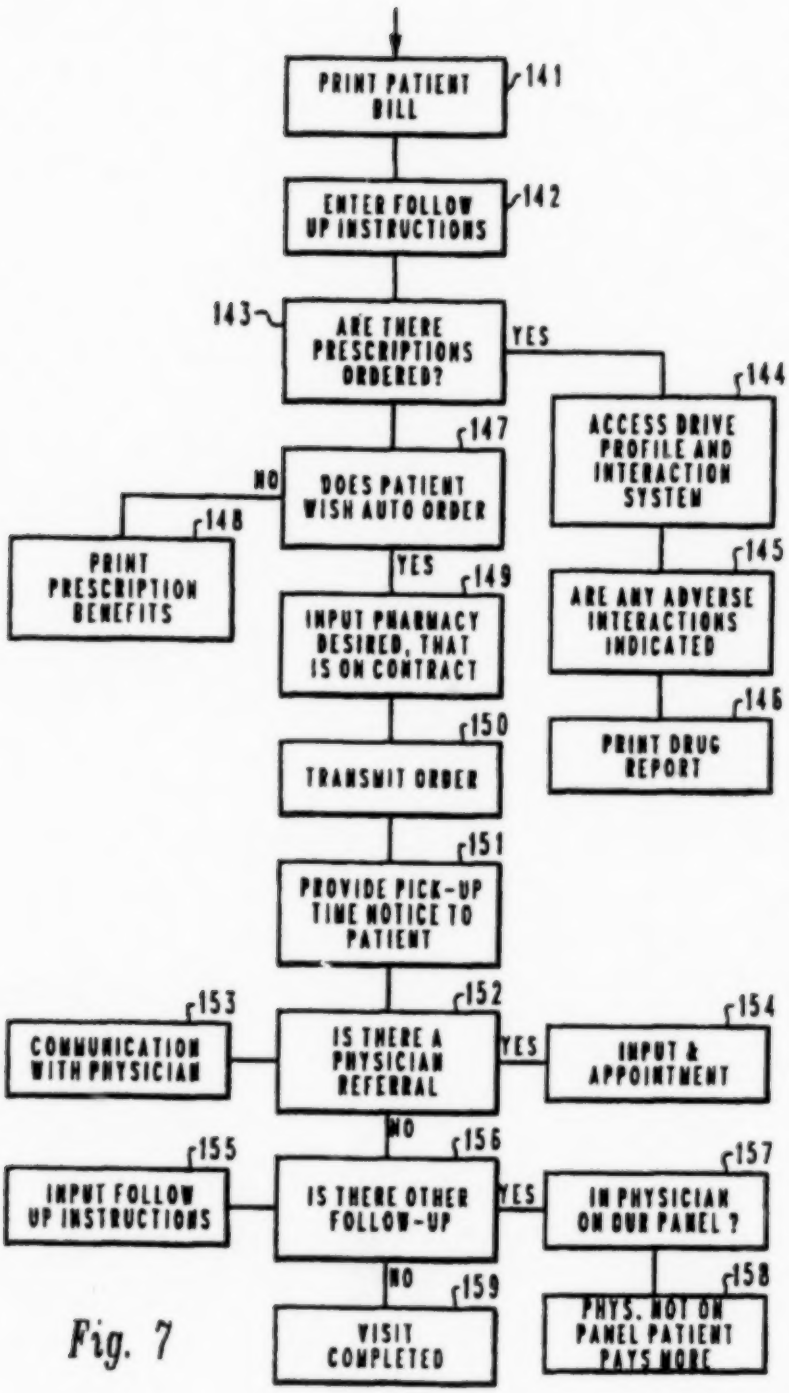
PRINT PATIENT BILL
141
ENTER FOLLOW UP INSTRUCTIONS
142
143
ARE THERE PRESCRIPTIONS ORDERED?
YES
144
ACCESS DRIVE PROFILE AND INTERACTION SYSTEM
147
DOES PATIENT WISH AUTO ORDER
NO
148
PRINT PRESCRIPTION BENEFITS
YES
149
INPUT PHARMACY DESIRED, THAT IS ON CONTRACT
145
ARE ANY ADVERSE INTERACTIONS INDICATED
146
PRINT DRUG REPORT
150
TRANSMIT ORDER
151
PROVIDE PICK-UP TIME NOTICE TO PATIENT
153
COMMUNICATION WITH PHYSICIAN
152
IS THERE A PHYSICIAN REFERRAL
YES
154
INPUT & APPOINTMENT
NO
155
INPUT FOLLOW UP INSTRUCTIONS
156
IS THERE OTHER FOLLOW-UP
YES
157
IN PHYSICIAN ON OUR PANEL ?
NO
159
VISIT COMPLETED
158
PHYS. NOT ON PANEL PATIENT PAYS MORE

Fig. 7

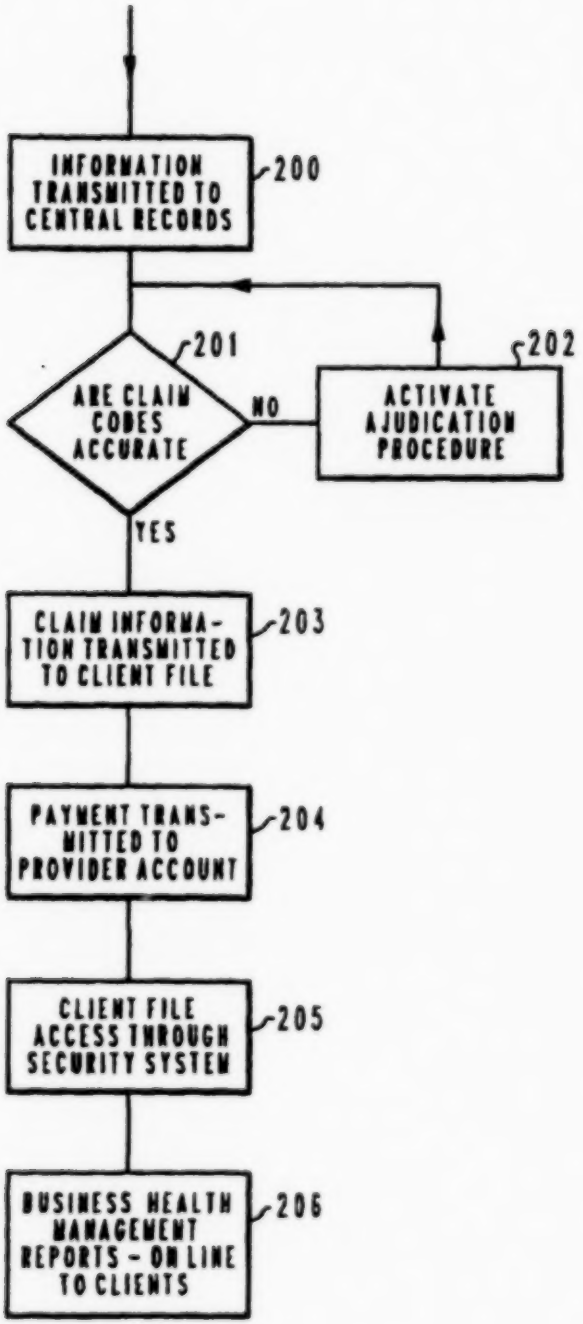
INFORMATION TRANSMITTED TO CENTRAL RECORDS
200
ARE CLAIM CODES ACCURATE
201
NO
ACTIVATE AJUDICATION PROCEDURE
202
YES
CLAIM INFORMATION TRANSMITTED TO CLIENT FILE
203
PAYMENT TRANSMITTED TO PROVIDER ACCOUNT
204
CLIENT FILE ACCESS THROUGH SECURITY SYSTEM
205
BUSINESS HEALTH MANAGEMENT REPORTS - ON LINE TO CLIENTS
206

Fig. 8

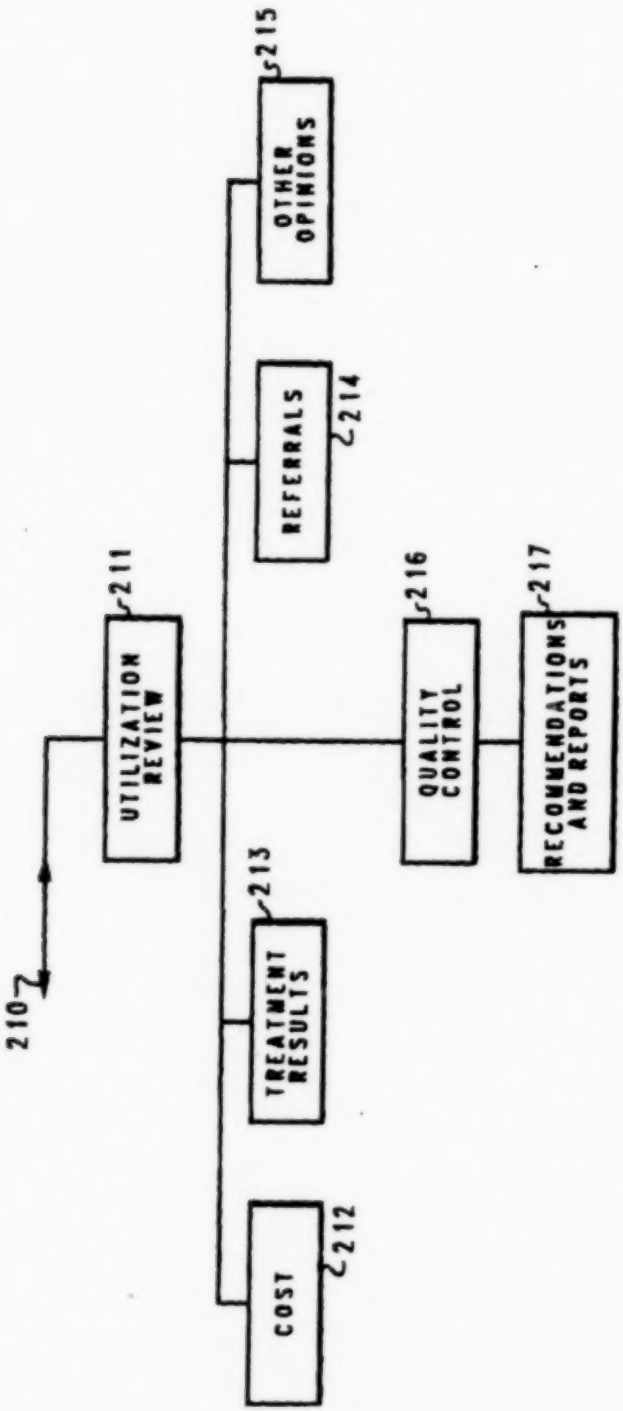
210
UTILIZATION REVIEW
211
COST
212
TREATMENT RESULTS
213
REFERRALS
214
OTHER OPINIONS
215
QUALITY CONTROL
216
RECOMMENDATIONS AND REPORTS
217

Fig. 9

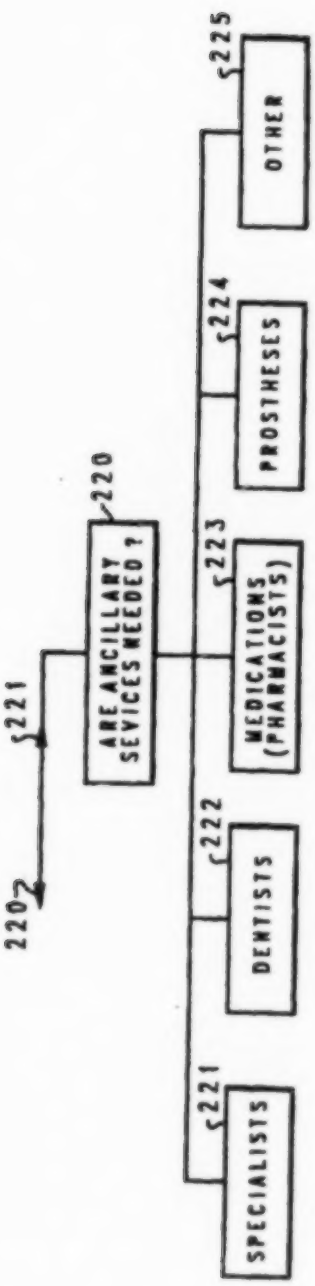
220
221
ARE ANCILLARY SEVICES NEEDED ?
220
222
DENTISTS
223
MEDICATIONS (PHARMACISTS)
224
PROSTHESES
225
OTHER
221
SPECIALISTS

Fig. 10

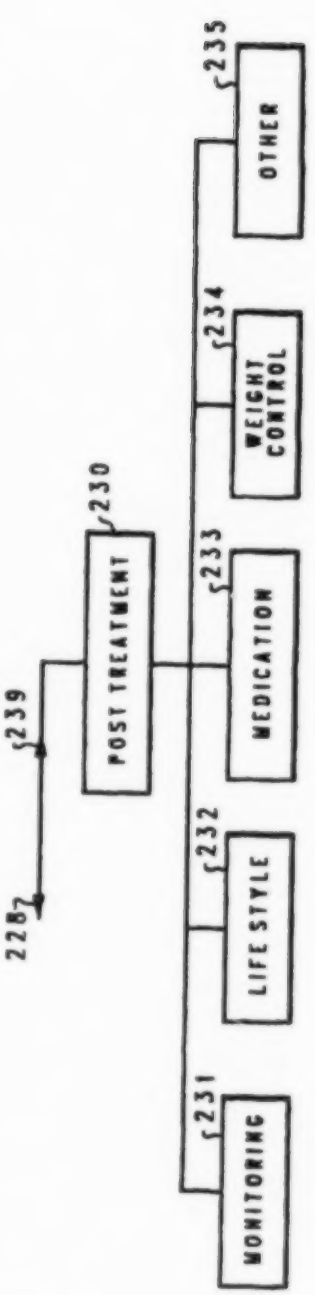
228
239
POST TREATMENT
230
232
LIFE STYLE
233
MEDICATION
234
WEIGHT CONTROL
235
OTHER
231
MONITORING

Fig. 11

ALL CARE HEALTH MANAGEMENT SYSTEM

This invention relates to managed health care systems and more particularly to managed health care systems which address health enhancement life styles, illness prevention, case management, fitness treatment and post treatment monitoring and/or review; and which integrate physicians, medical care facilities, patients, insurance companies and/or other health care payers, employers and banks and/or other financial institutions.

BACKGROUND OF THE INVENTION

A variety of medical payment systems have heretofore been proposed illustrative of which are those disclosed in U.S. Pat. No. 4,491,725 granted to Lawrence E. Pritchard on Jan. 1, 1985 and in U.S. Pat. No. 4,858,121 which was granted to William B. Barber et al. on Aug. 15, 1989.

According to the proposals of the prior art, systems have been proposed which include one or more magnetic and manual entry data entry terminals at the health care provider facilities, various verification and authentication routines, data storage which includes lists of insurance companies or other payers together with lists of medical procedures for which such payers are obligated to make payments, schedules of permissible fees for such procedures and selected data related specifically to each covered patient.

Other proposals of the prior art have included examination of participants to determine their physical condition, identification of existing physical profiles and encouragement of changes in life styles, where indicated, to enhance the physical condition of the participant and to lessen the likelihood of the development of disease.

However, such systems have not heretofore featured the total health care function, for they have not integrated important elements of total health care such as comprehensive preventive health measures, the review of the necessity for implementing selected procedures including changes in life styles, the obtaining of second opinions, (i.e., utilization review/case management) and other functions contemplated by total health management such as ancillary services. Neither have they included integration of the active participation by a patient's employer or inclusion of a patients' own available cash balances. Accordingly, since these missing functions are important ingredients to extend proposals of the prior art to fully comprehensive medical care, there has continued to be a need for a system which provides full integration of each of the aforementioned activities.

BRIEF SUMMARY OF THE INVENTION

The preferred embodiment of the present invention includes the integrated interconnection and interaction of the patient, health care provider, bank or other financial institution, utilization reviewer/case manager and employer so as to include within a single system each of the essential elements to provide patients with complete and comprehensive health care and payment therefor. It additionally contemplates, as an optional feature, the complete integration of all aspects of "wellness", that is, of the optimization of health-inducing diet and life style factors in combination with the aforementioned enhanced integrated diagnosis, treatment and post-treatment of illnesses when they do occur, and quality monitoring and enhancement systems including patterns of treatment protocols and diagnostic assist systems that will serve as aids in treatment planning and diagnostic test selection.

OBJECTS AND FEATURES

It is one general object of this invention to provide a fully integrated health optimization system.

It is another object of this invention to improve medical treatment systems.

It is another object of the invention to provide a wholly integrated health care management system.

It is still another object of the invention to provide an integrated health care management system including interactive participation with patients' employers and banks.

It is still another object of the invention to include in an integrated health care management system the interactive participation of a utilization review for recommended medical procedures.

It is yet another object of the invention to integrate preventive medical programs with treatment programs, thereby to encompass the full gamut of health wellness.

Accordingly, in accordance with one feature of the invention, all of the elements of health enhancement are integrated, including customized planning, prevention, treatment and rehabilitation, thus facilitating health wellness management, improving efficiency and reducing costs.

In accordance with the foregoing feature, integrated service is provided, thus reducing time, direct cost, and indirect cost often incurred through duplication of tests, excessive paperwork and inappropriate utilization, thus enhancing the ability of the system to provide quality health care through case management and physician interaction via smart systems.

In accordance with yet another feature of the invention, the planning and preventive aspects of health wellness includes the provision of customized recommendations for health-enhancing practices and for the periodic monitoring of participants' physical conditions, diets and life styles so as to identify and address incipient health problems and provide corrective measures before health problems develop.

In accordance with another feature of the invention, provision is made for health management of selected groups of participants as well as for individuals.

In accordance with still another feature of the invention, provision is made for integrated operation in both in-patient and out-patient modes of treatment.

In accordance with yet another feature of the invention, provision for integrated operation is provided for inclusion of ancillary services such as those provided by pharmacists, dentists, optometrists, audiologists and related laboratories.

In accordance with still another feature of the invention, the system is made flexible so that it is compatible with procedures required for implementing workmen's compensation processing.

In accordance with yet another feature of the invention, provision is made for optional precertification of patients and procedures, thus enhancing health care efficiency and reducing overhead costs.

In accordance with another feature of the invention, provision is made for patient discharge planning and monitoring.

In accordance with another feature of the invention, interactive communication links are provided with an integrated utilization review whereby for predetermined selected medical procedures proposed for imple-

mentation there is performed a utilization review which may optionally include second opinions.

In accordance with still another feature of the invention, the aforementioned utilization review which can be customized according to predetermined criteria, thus improving diagnosis, treatment and cost effectiveness.

In accordance with yet another feature of the invention, provision is made for both concurrent and retrospective utilization reviews.

In accordance with yet another feature of the invention, quality control is provided through interpretation of the aforementioned utilization reviews.

In accordance with still another feature of the invention, provision is made for on-line test results, digitized imaging, and projection on high resolution CRT screens in physician's offices.

In accordance with another feature of the invention, there is included within the system a link between the claims processing and the patients' employer, thereby providing important information transfer on a real time basis and the capability for employer override.

In accordance with yet another feature of the invention, banks or other repositories of funds are integrated into the system so as to provide automated transfer of funds to accounts of physicians and other health care providers.

In accordance with still another feature of the invention, provision is made for implementation of discretionary patient cost-sharing and/or supplementation to supplement approved fees and to obtain a selected medical treatment with a sharing of costs by the insurance company or other payer for the basic amount and with a supplement by the patient for any remaining residue.

In accordance with one other feature of the invention, the system is responsive to the utilization of either conventional credit-type cards or with "smart" cards that are specially dedicated for use with the system.

The foregoing and other objects and features of the invention will be apparent from the following detailed description, by way of a description of a preferred embodiment, with reference to the drawings.

BRIEF DESCRIPTION OF THE DRAWINGS

FIG. 1 is a block diagram depicting principal functional elements of the improved Wellness Health Management System;

FIG. 2 is a perspective view illustrating a typical manual and data card entry terminal for use in the Wellness Health Management System;

FIG. 3 is a block diagram depicting selected elements of the improved Wellness Health Management System when deployed in a distributed processing environment;

FIG. 4 is a diagram illustrating process flow of the preventive health portion of the System;

FIG. 5 is a diagram illustrating process flow of the diagnosis and treatment portion of the System;

FIG. 6 is a continuation of the process flow of FIG. 5;

FIG. 7 is a continuation of the process flow of FIG. 6;

FIG. 8 is an adjunct to the process flow of FIGS. 5-7;

FIG. 9 is diagram illustrating the conclusion of the process flow of FIGS. 4-8.

FIG. 10 is a diagram illustrating details of ancillary services; and

FIG. 11 is a diagram illustrating details of post treatment features of the invention.

DESCRIPTION OF A PREFERRED EMBODIMENT

Now turning to the drawing, and more particularly FIG. 1 thereof, it will be observed that it depicts the principal components of a preferred system in accordance with the principles of the invention. Depicted there are processing system 10 which is interconnected with one or more physician office terminals 11a-11c by conventional communication paths 12. Terminals 11a-11c may be any of a variety of conventional data input terminals (e.g., such as that shown in FIG. 2 and described below) that provide for pre-recorded card and/or manual data entry input. Also included are conventional printer 13 (linked to Processing System 10 via link 13a) and monitor 14 (linked to Processing System 10 via link 14a), monitor 14 preferably having a high resolution CRT screen positioned in a location within the physician's office so as to facilitate observation and review. This monitor may be of the type normally available with current state of the art Personal Computers.

The inclusion of an electronic mail function is optional and is identified by symbol 15. As will be observed, Electronic Mail 15 is linked to Processing System 10 via link 15a. Although provision of the electronic mail is not an essential part of the invention hereof, its inclusion further increases the versatility of the system and may render it more useful in some applications.

As is well known to those of skill in the art, many processing systems contain substantial memory storage capacity, and the system hereof advantageously employs such memory storage capacity to record a number of important bodies of data and other information. Some of such data and information are represented by the cylinders in FIG. 1. These may either be a part of the memory of the processing system 10 or may be in other data banks that are accessible to the processing system 10.

Although the system hereof in its preferred form contemplates the use of magnetically encoded personnel identification cards, identification of personnel may, of course, be made manually and appropriate information entered into the system manually. In contemplation of at least the optional use of magnetically encoded cards, including conventional credit cards, there is provided access to a memory storage file that includes a listing of bad credit cards as represented by Bad Credit Card File 16. Zip Code File 17 may be optionally included so as to facilitate location, identification and other processing that may be expedited through zip code use.

For situations in which an insurance company is involved, relevant insurance company information and benefits as represented by Insurance Company File 18. Examples of pertinent information in such File 18 include the identification of covered illnesses and procedures, limits on insurance company payments for various illnesses and procedures, treatments and procedures for which utilization review is required, and treatments and procedures for which second opinions are necessary.

Since the system hereof contemplates compatibility with conventional insurance provisions that include patient deductibles, co-insurance by patient or another company and various other considerations that require selected individualized historical and other data to be recorded for each participant, system memory either

includes or has access to files for each person as denoted by the Insured File 19. Somewhat similar considerations apply with respect to Claims File 20. There is stored detailed information covering relevant items of interest in ensuring accurate administration of claims in accordance with applicable criteria. Included are items such as those relating to claims histories, claims under review and claims in process.

Further reference to FIG. 1 reveals the inclusion of a smart system 21 including parameters dealing with diagnostics and drugs (as hereinafter described), an Employer File 21a which is indicative of those employer data which affect operation and implementation of the Wellness Health Management System. Examples are employee identification data such as employee identification numbers, length of service where such length of service affects participation in and coverage under the System, coverage for dependents, and similar items. Also included may be data identifying relevant employer parameters such as retention by the employer of review of selected treatments selected for implementation, employer override, preapproved monetary levels of authorization and the like. As will be evident from further consideration of FIG. 1, some of the above-described data may be contemplated by either the Insured File 19, the Employer File 21a, or both.

As will be perceived by those skilled in the art, many of the principles embodied in the Wellness Health Management System are applicable to individuals as well as groups. Others of the principles render the System even more attractive to specialized groups such as employees of a company or other organization. Accordingly, it will be recognized that pertinent data needed for implementation of the system will correspondingly vary, and the groupings of data identified in FIG. 1 are set forth for illustrative purposes and are not intended to suggest that all of such data are required in every instance in order to implement the principles hereof.

It is deemed well-known that although some groups of persons are self-insured (e.g., companies that themselves accept the risk and directly make payment to health providers), most companies and other organizations that provide health coverage for their employees do so through outside organizations, usually insurance companies. Accordingly, FIG. 1 includes, in addition to Insurance Company File 18, indicia 22 representing a check by the System to determine if a prospective participant (e.g., patient), has insurance company coverage, and, if so, any relevant particulars.

In addition to Insurance Company File 18 and Insurance Check indicia 22, there are shown communication links leading from Processing System 10 via path 23 to one or more insurance companies represented by rectangles 24a–24c. Such links integrate relevant insurance companies into the system according to the level of integration desired by the insurance company or companies. Of course, it will be evident that this also contemplates the integration, to the extent that is relevant, of self-insured companies and groups other than employees of a particular company.

Communication links 25 and 26 are provided to illustrate communication between Insurance Companies 24a–24c with Banks/Financial Institutions 27 and Employer(s) 28; and link 29 illustrates direct intercommunication between Banks/Financial Institutions 27 and Employer 28. Link 28a is provided to illustrate the communication link between Employer 28 and Processing System 10; and communication link 27a illustrates the communication link between Banks/Financial Institutions 27 and Processing System 10.

As mentioned above, one of the features hereof resides in the integration of the full spectrum of health care parameters including preventive profiles and regimens, the addressing of diseases and other health-impairing incidents when they do occur, and the addressing of post-treatment matters as necessary or desirable. Accordingly, FIG. 1 includes reference to Preventive Health Procedures 30 linked to Processing System 10 via link 31, and Post Treatment Procedures 32 linked to Processing System 10 via link 33.

As mentioned above, another of the features of the invention is represented by the cylinder 21 "Smart Systems—Drugs/Diagnostics". Such a smart system is contemplated by several of the following operations including that identified by rectangle 34 which is denominated "Utilization Review/Second Opinion/-Procedure Approval". As will be evident from the ensuing description, the System is very versatile in that it can be tailored to include either or both of the Utilization Review and Second Opinion according to applicable criteria such as may be established, for example, by an employer, insurance company or group administration. Accordingly, rectangle 34 is shown as being linked by link 35 to an employer (if applicable), and by link 36 through Processing System 10 to other elements of the overall System.

Still another of the features of the invention is the optional integration of ancillary services into the System. As further mentioned herein, by ancillary services is meant the totality of supporting services that are needed to support total health. Such services include those of pharmacists, prosthesis providers, dentists, optometrists, audiologists and other medical specialists, laboratories and the like. Such services are represented by Ancillary Services rectangle 37 that is shown as being linked into the System through Processing System 10 through link 38. Other features are depicted by Patient Discharge Monitoring and Planning (linked to Processing System 10 through link 40), and Quality Control 41 (linked to Processing System 10 through link 42.

The Physician File 44 is provided to represent several classes of information and data that are useful in practicing the principles of the invention. While some of these data and information may be included elsewhere in the System so long as they are generally accessible therein, it may be convenient to describe them as if included within the Physicians File 44. Accordingly, the following references to such data and information should be understood to contemplate the physical location of such data in other sites as well as, or in addition to, files at the physician's location.

In accordance with the "Smart System" characteristics of the invention, Physician File 44 preferably will include an identification of the most commonly encountered diseases and other ailments, together with symptoms usually associated therewith. Accordingly, if symptoms are entered into the system terminal (e.g., one of terminals 11a–11c), and an identification of the corresponding illness is requested from the Processing System 10, the physician's file is interrogated, and the system prepares a list of the most likely medical condition corresponding to such symptoms, together with the generally approved and/or recommended treatment protocols. It also contemplates the identification within Physician File 44 of those procedures for which Utiliza-

tion Review and/or Second Opinion 34 are deemed necessary or desirable.

In addition to the foregoing, Physician File 44 may optionally include other data or items of information. Thus, each individual physician may tailor a portion of his file to include additional items which reflect his own style and preferences.

Now turning to FIG. 2, it will be observed that it depicts, in a perspective view, a terminal suitable for utilization in the System as identified by symbols 11a–11c in FIG. 1. Although as mentioned above, all of the features of the illustrated terminal are not required in order to practice the principles of the invention and thus some of them are optional, it is deemed apparent that each of the features illustrated are attractive and add to the usefulness of the terminal.

The terminal of FIG. 2 includes a main housing 50 having a visual display window 51, a card data entry slot 52 having an elongated portion 53 and an enlarged portion 54, conventional manual data entry keyboard 55 and 10-key numeric calculator 56. It also includes conventional telephone handset cradle 57 and telephone handset 58. As will be evident from reference to FIG. 2, the terminal is operative in accordance with techniques well known in the data processing arts. Thus, for example, manual entry of information may be made by depressing the appropriate keys on keyboard 55, and information entry may also be made by inserting a conventional or special data-containing card (e.g., a "swipe card") into data entry slot 52 and moving it laterally therethrough. Although not necessary to the practice of the invention hereof, it is contemplated that the terminal will be responsive to data entry through conventional credit cards as well as special cards that may be issued for such purpose. It is also contemplated that the terminal may be adapted for reading bar codes such as those conventionally employed for identifying merchandise.

Now turning to FIG. 3, it will be observed that it illustrates practice of the principles hereof in a distributed processing environment. Thus, according to FIG. 3, a portion of the processing system 10 of FIG. 1 may be embodied in micro processor 60 and the remaining portion of the Processing System 10 in one or more other processors such as central processing system 61, or a personal computer or main frame computer as identified by rectangle 61a. Communication between system 61/61a and processor 60 is preferably conducted through one or more conventional modems represented by rectangle 62. In addition, although the files described above in connection with FIG. 1 may be provided within remote memory (e.g., memory within system 61), it is contemplated that at least a portion of such memory is resident physically at or in proximity to terminal(s) 11a–11c within the physician's office. Accordingly, the transaction file 63, procedures file 64 and library file 65 are shown as connected to the microprocessor 60 (rather than central processing system) for illustrative purposes only and not as requiring them to be physically resident at the physician's offices.

FIG. 3 also illustrates another feature mentioned above, namely, the provision of an optional high resolution display 66 preferably located in the physician's office so as to permit on-line real time display and visual review of relevant data, test results and the like. Also included are representations 66a–66c which are illustrative of various reports that may be printed out or otherwise prepared in hard copy form by printer 13.

Now turning to FIG. 4, the preventive health aspect of the Wellness Health Management System is illustrated. There, it will be observed, is the entry of information for each participant into the System. This is symbolized by rectangle 70. Authorization and Identification 71 are made by designees such as authorized personnel within a company personnel department or an appropriate official within an insurance company. Once authorized, a participant is provided with an appropriate identification and/or other indicia which is subsequently used by the System to verify his authorization to participate as well as to identify his records and other information and data utilized by the System in carrying out its functions.

Next, it is contemplated that health screening is conducted as indicated at Initial Health Screening 72. Such initial health screening ordinarily includes recording health history 73 and a physical examination 74. As denoted by Data Entry items 75 and 76, relevant items of information are entered into System memory and/or manual records.

Based upon physician review (not depicted), health history 73 and physical examination information 74, preventive health recommendations 77 are prepared and presented to the participant. Such recommendations ordinarily include any pertinent changes in life style such as a change in diet, elimination of smoking, reduction or elimination of alcohol and drugs, reduction in weight, participation in prescribed physical exercise programs, reduction in blood pressure and the like. These are then communicated to the participant. This may be accomplished in any convenient way, for example by report printout such as reports 66a–66c of FIG. 3, oral communication, or both.

After preventive health recommendations have been communicated to the participant, provision is made for periodic monitoring and review 78. Such monitoring may take any of a variety of forms such as voluntary participation in tests, checking in to exercise areas by semiautomatic verification such as engaging an identification card with an appropriate reader, automatic identification of a participant by known sensing mechanisms appropriately located on an oval running track to account the number of times a participant has traversed the track, and the like. A variety of other monitoring techniques will also be evident to those skilled in the art.

In addition to the foregoing, health incentives and rewards 79 may be included in the preventive health portion of the System. Thus, for example, bonuses may be credited to participants according to the extent to which they adhere to their personalized recommended preventive health program or to the extent to which their own personal draw upon health resources falls below specified levels.

Now turning to FIG. 5, it will be observed that it illustrates process flow of the diagnosis and treatment portion of the System. This portion, as with others, contemplates that the participant first be identified as one who is authorized to participate at some predetermined level of participation and financial support. Accordingly, this portion of the System includes an appropriate introduction of identifying information. Although as mentioned above, such introduction may be made manually as per one of the above-described terminals 11a–11c, the System preferably contemplates the use of a data card such as one that is encoded magnetically or one that contains conventional bar codes. Thus, the first element of FIG. 5 is the presentation of appro-

priate identification as represented by Present Card 100. Next, data is introduced into the System as indicated by Swipe Card Input ID Code and Insurance Code 101. This information is then processed by the Processing System 10 of FIG. 1 or corresponding microprocessor 60 and/or central processing system 61 of FIG. 3, accessing identification information as necessary or desirable from attendant files 44 (FIG. 3), and/or files 18–22 (FIG. 1) . Such information is utilized to verify the identification of the applicant and the authorization of the applicant to participate in the system as denoted by Is Patient Authorized rectangle 102. It also identifies to the System information and parameters for the System to perform its remaining functions as will be more evident from the following description.

If verification by the System reveals that the applicant is not authorized to participate, then an indication thereof is produced. This may take any of a variety of forms such as a visual or audible indication. Such an indication is represented by the rectangle 103 which contains the illustrative message Print "Sorry Not Authorized, Call 1-800-4Health". Of course, other indicia may be produced by the System as desired to tailor the System to the desires of the using physician and/or his staff.

If, as would normally be expected, the System verifies the authenticity and right to participate by the applicant, it then proceeds with its aforementioned accesses of information and parameters for the system to perform its remaining functions. Included are the accessing of the appropriate insurance or other basis for participation, the schedule for treatments and the prices thereof. This is indicated by rectangle 104. Also accessed are the participant's (patient's) charts and historical records. This is indicated by rectangle 105. As mentioned above, patient's medical charts and records are preferably stored in the physician's files 44 (FIGS. 1 and 3).

In order to expedite physician/staff review, provision is made to optionally produce a summary report. This is denoted by rectangle 106 Prompt "Do you want a Medical Chart Summary Report." If the summary report is requested as noted at 107, the report is then displayed either by visual display (e.g., display 66) or printed out as noted by rectangle 108 "Print Summary Report of Most Recent H&P and Test Results."

Continuing with operation of the System, it will be observed that it provides for accessing of drug profiles. Thus, the System asks "Is Drug Profile Requested" as denoted by rectangle 109. If the answer is "Yes", then the appropriate drug profile is displayed and/or printed as denoted by rectangle 110.

At this point in System operation, it is contemplated that information identifying the reason for the visit be entered and that any relevant tests be ordered. This is indicated by rectangle 111. Next, is shown "Access Patterns of Treatment Protocols 112. By this is contemplated the entry of symptoms and other data which can assist in making a diagnosis and identifying the aforementioned recommended treatment protocols. Thus, the physician is assisted in correlating the observed patient symptoms and test results so as to identify the most likely causes of the health problem, complete his diagnosis, and prescribe the most appropriate treatment protocols.

Further reference to the drawings reveals that FIG. 6 is a continuation of FIG. 5. Accordingly, reference to the upper portion of FIG. 6 reveals that next, the System addresses the question as to whether a proposed pattern of treatment is appropriate. This is indicated by rectangle 120. The physician or staff member enters into the System data identifying the proposed pattern of treatment, whereupon, the System compares the proposed pattern of treatment with the aforementioned recommended treatment protocols and provides an indication of any problem differences.

If the answer to the question of appropriateness of the recommended treatment is no, then the System produces a visual indication thereof as, for example, either through the aforementioned display 66 (FIG. 3), or a printout as denoted by rectangle 121. The physician or supporting staff member thus has called to this attention any discrepancy between his proposed pattern of treatment and that which is generally recommended by recognized medical authorities.

In addition to the foregoing, the System also includes provision for further diagnostic support. This is indicated by rectangle 122 "Is diagnostic Suport Needed." If the answer is "No", then the system continues on as indicated. However, if the answer is "Yes", then the system invokes such additional assistance as indicated by rectangle 123 "An Expert System that Compares Diagnostic Testline Attendance Based on Physician goal and Patient History." Thus, the physician is able to determine the testing options based on conditions and the condition of the body that each test was designed to report on. In addition, the physician is given the cost of each testing procedure including those that are laboratory or radiology based. If requested, the system will allow the physician to select through a triage process to determine what test would yield the best data for diagnosis of the presenting problem.

As will be evident to one skilled in the art, a well-ordered system should provide for the ordering of tests by the attending physician at any point in its operation. Accordingly, although the ordering of tests is shown in the drawing at particular points, it should be understood that this is illustrative only and does not suggest that tests may not be ordered at other points during operation of the System.

The actual ordering of tests is identified by the Order Test rectangle 124. Tests may be ordered by separate orders levied on laboratories and the like by telephone, written documents or semi-automatically through operation of the System processor and communication by modem and the like. Thus, as earlier mentioned and as described below, supporting and ancillary services are integrated into the System and are effective to provide such ancillary services and support as are called for by the attending physician or other authorized staff personnel.

The capability for displaying various detailed information items may be included in the System. This is illustrated by inclusion of rectangle 125 which is labelled "Display Price Paid by this Company for Test." As mentioned previously, it is contemplated that a schedule of fees approved by the financial institution (e.g., insurance company) for various tests and procedures is stored within the appropriate memory bank(s). This schedule is accessed, and the approved fee for the specific procedure under consideration is displayed or otherwise communicated to the physician or supporting staff member.

After receiving the results of tests and/or other supporting services, the results are entered into the System. This may be performed either by manual keyboard

entry or semi-automatically through the communication of appropriate information into the System electronically. This is denoted by rectangle 126 "Input Test Results and Update Record."

After the records have been updated to reflect any test results that maybe applicable, provision is made for the attending physician or authorized support staff member to review the diagnosis or proposed treatment protocols and either amend or confirm his proposed course of treatment.

As will be recognized by those skilled in the arts, it is customary for insurance companies and other health care financial organizations to utilize codes for identifying and determining approved criteria and the approved schedules of procedures and costs therefor or in accordance therewith. As example of such codes is the family of codes designated with the symbols ICD (an acronym standing for International Code of Disease based on Health Care Financing Administration official codes as published by the U.S. Department of Health and Human services in 1989.

Reference herein is also made to another standard set of codes known to those skilled in the art as CPT codes. The term CPT is an acronym derived from physicians' Current Procedural Terminology. These codes are standard treatment description and price file codes as set forth in the Amnerican Medical association compendium of Physicians Current Procedural Terminology. The current CPT is a listing of descriptive terms and identifying codes for reporting medical services and procedures performed by physicians.

In order to facilitate claims compliance with applicable criteria, ICD9 coded information is entered into the System to indicate various data relating to details of the incident (patient visit, treatment and the like). This is indicated by rectangle 127.

The System interrogates the Insurance Company (or other payor) files, e.g., file 18 in FIG. 1, and verifies that the ICD9 codes either meet or do not meet applicable criteria. This is noted by rectangle 128. In so doing, the expense associated with the incident is considered as a claim and is reviewed as noted by rectangle 129 "Verify Claim for Proper Treatment and Charges."

If, as noted in the drawing, the entered ICD9 codes do not meet the applicable criteria check (128), then a visual representation thereof is displayed or otherwise communicated to attending personnel as indicated by rectangle 130, whereupon, it is contemplated that there will ensue a treatment discussion with a nurse (or other appropriate persons) as noted by rectangle 131. Thereafter, a treatment protocol is either approved or disapproved as noted by rectangle 132. If disapproved, the System contemplates contact with the Medical Director or other cognizant authority as indicated by rectangle 133. On the other hand, if the treatment protocol is approved, the System then proceeds to an examination of CPT4 codes and checks to see if they are appropriate as noted by rectangle 134. If the System determines that the CPT4 code check is not met, the System so notes and displays or otherwise indicates that further checking is needed. This is indicated by rectangle 135 "Call Patient Care 1-800-4Health." Upon accessing rectangle 135, the System proceeds in a manner similar to that for implementing the checking of ICD9 codes. This is noted by rectangle 136

Now returning to rectangle 133, it will be observed that if the medical director does not approve or otherwise grant a variance so as permit proceeding with the treatment, then the System includes referral for peer review as noted by rectangle 137. Peer review results in a decision on the recommended course of treatment and results in the determination of whether or not the charges are in agreement with any applicable financial criteria such as whether or not the charges are in agreement with an insurance contract. This is denoted by rectangle 138. If the charges are found not to be in agreement with applicable criteria, then a visual manifestation, preferably a print-out, is provided. This is indicated by rectangle 139 Print "The Agreed Upon Price for Procedure is $.... For Assistance Call 1-800-4Health."

It will now be evident that the aforementioned Second Opinion feature is included by the System within the procedures set forth by the process flow depicted in the lower half of FIG. 6. Thus, if selected criteria are not met, they a proposed course of treatment or selected procedure are shown to require a second opinion as contemplated by reference to a medical director (rectangle 133) or one more peers (rectangle 137).

Returning to rectangle 138, if the charges are in agreement, then the System processor calculates any patient co-pay and/or deductible as noted by rectangle 140, and the printer 13 (FIG. 1) prints out a statement for the patient as noted by rectangle 141.. The System processor also records pertinent data and information into the above-described files, as needed. If System criteria require reference to or approval by an Employer, Insurance Company, or Financial Institution, the System processor (s) ensures that such is accomplished.

The attending physician or designee ensures that follow-up instructions, information and data are entered into the System as denoted by rectangle 142. This ordinarily includes an indication of any prescriptions that are to be ordered as noted by rectangle 143. If there are any, the System then accesses its drug profile in memory as noted by rectangle 144 and identifies any adverse interactions that may be indicated as noted by rectangle 145. The System printer (e.g., Printer 13 of FIG. 1) then prints out a drug report 146 which includes pertinent information relating to proposed drugs.

Next, the System addresses the question as to whether the patient wishes the prescribed drugs to be ordered automatically by the System as noted by rectangle 147. If not, the System printer (e.g., printer 13) prints out a description of prescription benefits 148 as an aid to the patient in his obtaining himself the indicated medications. On the other hand, if the answer is Yes, then the System accesses its aforementioned data bank to ascertain the identity of any approved ancillary provider (e.g., pharmacy as indicated by rectangle 149) and then automatically transmits the order and indicia (rectangle 150) identifying the medication to such ancillary provider as a basis for the provider to prepare the indicated medication. Included is a notice to the patient 151 to timely pick up the medication or otherwise arrange for its timely acquisition.

In order to provide for effective communication with others having a legitimate interest in any physician-patient interaction, provision is made for contact with any referring physician. This is noted by rectangle 152 in which the System makes inquiry of its data as to whether the patient was referred to the System by another physician or, conversely, whether there is not a referral by the attending physician to a specialist or another physician. If the patient was referred to the

attending physician by another physician, appropriate feed-back information is communicated to the referring physician. This can accomplished by telephone report, electronic mail, or preferably by written hard copy print out as indicated by rectangle 153. On the other hand, if the patient is referred to another physician, provision is made for the making of an appointment and transmission of pertinent information to such other physician as noted by rectangle 154.

If there is no other physician referral, the System then accepts any Input Follow Up Instructions and prepares written communications thereof to the patient as noted by rectangle 155. If there are other follow ups as noted by rectangle 156, the System ensures that pertinent data and indicia are entered into pertinent files (including the System calendar) so that timely call-up can be made for monitoring and compliance. In addition, the System optionally determines whether the attending physician is a part of a relevant group of physicians as noted by rectangle 157. Ordinarily, if the attending physician is not part of the relevant group, some appropriate additional charge is made to reflect the relevant additional costs. This is indicated by rectangle 158.

When the visit or other contact (e.g., monitoring visit by attending physician to patient when hospitalized), an appropriate input is made to the System as denoted by rectangle 159. The System thus recognizes when the visit or other incident is completed and makes an appropriate record in its memory.

Now turning to FIG. 8, others of the features of the invention are depicted. There, the flow of information to central system records is indicated by rectangle 200. The System checks to ensure whether claim codes are accurate as noted by diamond 201. If no, the an adjudication procedure is activated as noted by rectangle 202. According to such adjudication procedure, review by one or more designated persons is made to ensure a high level of quality control and conformity with applicable criteria.

Upon regularization of claim codes, claim information is transmitted to a client file as noted by rectangle 203. By client is meant an employer, group manager, insurance company and the like. Concurrently with transmission of claim information to the client, provision is made for transfer to the account of the health provider (e.g., the attending physician, clinic or the like) of the approved sums for such claims as noted by rectangle 204. This can be accomplished in a variety of ways, depending upon the desires of the health provider, employer, insurance company, group administrator and financial institution (e.g., bank). Such transfer is identified in the disclosure of FIG. 1 and is described in connection therewith. Information as to such transfer also is communicated to the relevant client file through an appropriate security system as noted by rectangle 205. Business management reports, as desired, are prepared periodically and sent to clients as noted by rectangle 206.

FIG. 9 depicts aspects of the above-mentioned utilization review. According to a feature of the System, utilization review may be tailored to meet criteria established by one or more users of the System. Thus, selected levels of expense, types of procedures, length of expected hospitalization, specific illnesses, categories of illnesses or other criteria may be utilized to identify those items for which utilization review is indicated. Alternatively, or in addition, selected items may be selected at random for utilization review and quality control determination.

The point of connection to the flow diagrams of the foregoing Figures is discretionary. However, in accordance with the preferred embodiment, it is expected that the point defined by arrow 210 in FIG. 9 will connect into the remainder of the System at a point such as that identified by element 200 of FIG. 8. Thus in addition to information being transmitted to central records (as noted by rectangle 200), it also is made available to utilization review 211 (FIG. 9). As mentioned above, the System may be tailored to consider any of a variety of factors for review such as Cost 212, Treatment Results 213, Referral Matters 214, Other Opinions 215 and the like. From a review of the cost effectiveness of the item under consideration, factors indicative of Quality Control 216 may readily be calculated by the System using desired criteria. For example, the frequency of repeat consultations for the same health problem can be used as an indication or determinant of effectiveness of treatment. Moreover, from a study of System data, Recommendations and Reports 217 are generated to form the basis for future improvements.

FIG. 10 illustrates the aforementioned ancillary services in more detail. There, communication of ancillary needs is represented by arrows 220 and 221 which depict the two-way flow of information. As mentioned above, the System identifies the need for ancillary services by examining data and information relating to each participant (patient) as noted by rectangle 222 and calls such need to the attention of the attending physician or other designated authority. In the absence of entry to the contrary, the System communicates the need appropriately as described above to the indicated ancillary service, examples of which are Specialists 221, Dentists 222, Pharmacists 223 for Medications, Suppliers of Prostheses 224, and any others as represented by rectangle 225.

FIG. 11 illustrates the aforementioned feature of Post Treatment matters. There, arrows 228 and 230 indicate the two-way flow of information to and from the principal flow paths as described above. Also as described above, the System determines from entered data, the need for Post Treatment matters 230 such as Monitoring 231, Life Style 232, Medication 233, Weight Control 234 and Other 235. Thus, operation of the System is extended to cover all relevant facets of health maintenance and control.

Although the invention hereof has been described by way of example of a preferred embodiment, it will be evident that other adaptations and modifications may be employed without departing from the spirit and scope thereof. For example, other types of distributed processing could be employed. Additionally, a wide variety of automatic transfer of funds could be employed as between providers, ancillary services, employers, insurance companies and the like.

The terms and expressions employed herein have been used as terms of description and not of limitation; and thus, there is no intent of excluding equivalents, but on the contrary it is intended to cover any and all equivalents that may be employed without departing from the spirit and scope of the invention.

What is claimed is:

1. A comprehensive health care management system comprising:

(a) input means for entering data identifying each of a predetermined plurality of persons;

(b) a data bank memory interconnected with said input means, said data bank memory including an identification of predetermined procedures requiring utilization review;

(c) payment means; and

(d) means in communication with said input means responsive to input of data through said input means symbolic of symptoms of one of said predetermined plurality of persons for tentatively identifying a proposed mode of treatment for said one of said predetermined plurality of persons and, when said proposed mode of treatment includes one of said predetermined procedures requiring utilization review, for producing indicia indicative thereof and for preventing payment therefor by said payment means until said utilization review has been obtained and data indicative thereof has been entered in said system.

2. A comprehensive health care management system according to claim 1 in which said means responsive to the input of data symbolic of patient symptoms for tentatively identifying a proposed mode of treatment include means effective when said proposed mode of treatment includes an ancillary service, for producing indicia indicative thereof and for providing said ancillary service.

3. A comprehensive health care management system according to claim 1 in which said means responsive to the input of data symbolic of symptoms includes means for tentatively identifying preventive health routines for addressing each of any identified plurality of potentially health-destructive conditions including excessive weight, high blood pressure, smoking, and insufficient exercise.

4. A comprehensive health care management system comprising:

(a) input means for entering data identifying each of a predetermined plurality of persons and for entering data symbolic of patient symptoms;

(b) a first data bank memory interconnected with said input means, said first data bank memory containing predetermined items of medical history for said predetermined plurality of persons;

(c) another data bank memory interconnected with said first data bank memory, said another data bank memory including an identification of predetermined procedures requiring utilization review;

(d) payment means; and

(e) means interconnected with said payment means responsive to input to said system of said data symbolic of patient symptoms for tentatively identifying a proposed mode of treatment and, when said proposed mode of treatment includes one of said predetermined procedures requiring utilization review, for producing indicia indicative thereof and for preventing payment therefor by said payment means until said utilization review has been obtained and data indicative thereof has been entered in said system.

5. A comprehensive health care management system according to claim 4 in which said predetermined items of medical history include physical profiles of said predetermined plurality of persons.

6. A comprehensive health care management system according to claim 4 in which said input means further includes a data input terminal for entering into said system said predetermined items of medical history.

7. A comprehensive health care management system according to claim 4 in which said data input terminal is responsive to inputs thereto to enter into one of said data banks data severally identifying said predetermined plurality of persons.

8. A comprehensive health care management system according to claim 7 further including means for verifying authenticity of identifications of said predetermined plurality of persons.

9. A comprehensive health care management system according to claim 8 further including means for verifying eligibility for treatment of said predetermined plurality of persons.

10. A comprehensive health care management system according to claim 9 wherein said means for verifying the eligibility for treatment of said predetermined plurality of persons further includes means for identifying preselected classes of treatments to be pre-certified for authorized treatment and payment.

11. A comprehensive health care management system according to claim 4 in which said data input terminal includes provision for data entry from a magnetically-encoded medium.

12. A comprehensive health care management system according to claim 4 in which said data input terminal includes provision for data entry from a manual keyboard.

13. A comprehensive health care management system according to claim 2 in which one of said data bank memories includes identification of symptoms for diagnosis of each of a predetermined plurality of illnesses.

14. A comprehensive health care management system according to claim 2 in which one of said data bank memories includes data representing treatment for each of a predetermined plurality of illnesses.

15. A comprehensive health care management system according to claim 13 in which one of said data bank memories includes data representing treatment for each of said predetermined plurality of illnesses.

16. A comprehensive health care management system comprising:

(a) input means for entering data identifying each of a predetermined plurality of persons;

(b) a data bank memory interconnected with said input means, said data bank memory including an identification of predetermined procedures requiring second options;

(c) payment means; and

(d) means in communication with said input means responsive to input of data through said input means symbolic of symptoms of one of said predetermined plurality of persons for tentatively identifying a proposed mode of treatment for said one of said predetermined plurality of persons and, when said proposed mode of treatment includes one of said predetermined procedures requiring a second opinion, for producing indicia indicative thereof and for preventing payment therefor by said payment means until a second opinion has been obtained.

17. A comprehensive health care management system according to claim 16 in which said means responsive to the input of data symbolic of symptoms for tentatively identifying a proposed mode of treatment include means effective when said proposed mode of treatment includes an ancillary service, for producing indicia indicative thereof and for providing said ancillary service.

18. A comprehensive health care management system according to claim 16 in which said means responsive to the input of data symbolic of symptoms includes means for tentatively identifying preventive health routines for addressing each of any identified plurality of potentially health-destructive conditions including excessive weight, high blood pressure, smoking, and insufficient exercise.

19. A comprehensive health care management system comprising:

(a) input means for entering data identifying each of a predetermined plurality of persons and for entering data symbolic of patient symptoms;

(b) a first data bank memory interconnected with said input means, said data bank memory containing predetermined items of medical history for said predetermined plurality of persons;

(c) another data bank memory interconnecting with said first data bank memory, said another data bank memory including an identification of predetermined procedures requiring second opinions;

(d) payment means; and

(e) means interconnected with said payment means responsive to the input to said system of said data symbolic of patient symptoms for tentatively identifying a proposed mode of treatment and, when said proposed mode of treatment includes one of said predetermined procedures requiring a second opinion, for producing indicia indicative thereof and for preventing payment therefor by said payment means until a second opinion has been obtained.

20. A comprehensive health care management system according to claim 19 in which said predetermined items of medical history include physical profiles of said predetermined plurality of persons.

21. A comprehensive health care management system according to claim 19 in which said input means further includes a data input terminal for entering into said system said predetermined items of medical history.

22. A comprehensive health care management system according to claim 19 in which said data input terminal is responsive to inputs thereto to enter into one of said data banks data severally identifying said predetermined plurality of persons.

23. A comprehensive health care management system according to claim 22 further including means for verifying authenticity of identifications of said predetermined plurality of persons.

24. A comprehensive health care management system according to claim 23 further including means for verifying eligibility for treatment of said predetermined plurality of persons.

25. A comprehensive health care management system according to claim 24 wherein said means for verifying eligibility for treatment of said predetermined plurality of persons further includes means for identifying preselected classes of treatments to be pre-certified for authorized treatment and payment.

26. A comprehensive health care management system according to claim 19 in which said input means includes provision for data entry from a magnetically-encoded medium.

27. A comprehensive health care management system according to claim 19 in which said input means includes provision for data entry from a manual keyboard.

28. A comprehensive health care management system according to claim 17 in which one of said data bank memories include identification of symptoms for diagnosis of each of a predetermined plurality of illnesses.

29. A comprehensive health care management system according to claim 17 in which one of said data bank memories include data representing treatment for each of a predetermined plurality of illnesses.

30. A comprehensive health care management system according to claim 28 in which one of said data bank memories include data representing treatment for each of said predetermined plurality of illnesses.

31. A comprehensive health care management system comprising:

(a) a data input terminal for entering data identifying each of a predetermined plurality of persons being on a payroll of an organization;

(b) a data bank memory containing predetermined items of medical history for said predetermined plurality of persons;

(c) payroll deduction means for providing payment for said predetermined plurality of persons;

(d) another data bank memory including an identification of predetermined medical procedures and pre-approved levels of payments for said predetermined medical procedures; and

(e) means responsive to input of data indicative of performance of one of said predetermined medical procedures for one of said predetermined plurality of persons for examining a level of charge made by a provider of medical services for the performed procedure and, if said level of charge exceeds the pre-approved level of payment for said procedure, for causing said payroll deduction means to pay the exceeded amount by payroll deduction.

32. A comprehensive health care management system comprising:

(a) a first data input terminal at the location of a medical services provider for entering data identifying each of a predetermined plurality of persons being on a payroll of an organization;

(b) a second data terminal at the location of said organization;

(c) a first data bank memory containing predetermined items of medical history for said predetermined plurality of persons;

(d) another data bank memory including an identification of predetermined medical procedures and pre-approved levels of payments for said predetermined medical procedures; and

(e) means responsive to input of data indicative of performance of one of said predetermined medical procedures for one of said predetermined plurality of persons and for examining a level of charge made by a provider of medical services for the performed procedure and, if said level of charge exceeds the pre-approved level of payment, for producing at the location of said second data terminal indicia indicative thereof and for permitting authorization for the excess to be made by said organization.

33. A comprehensive health care management system comprising:

(a) a data input terminal for entering data identifying each of a predetermined plurality of persons being subject to workmen's compensation;

(b) a data bank memory including an identification of predetermined medical procedures and pre-

approved levels of workmen's compensation payments for said predetermined medical procedures; and

(c) means responsive to the input of data to said system indicative of the desirability of performance of one of said predetermined medical procedures for one of said predetermined plurality of persons for examining a level of charge made by a provider of medical services for the performed procedure and, if said level of charge exceeds the pre-approved

34. A comprehensive health care management system comprising:

(a) input means for entering data identifying each of a predetermined plurality of persons and for entering data symbolic of patient symptoms;

(b) a first data bank memory interconnected with said input means, said first data bank memory containing predetermined items of medical history for each of said predetermined plurality of persons;

(c) another data bank memory interconnected with said first data bank memory, said another data bank memory including an identification of predetermined procedures requiring ancillary services; and

(d) means interconnected with said another data bank memory and responsive to the input to said system of said data symbolic of patient symptoms for tentatively identifying a proposed mode of treatment and, when said proposed mode of treatment includes one of said ancillary services, for producing indicia indicative thereof and for providing said one of said ancillary services.

35. A comprehensive health care management system according to claim 34 in which said predetermined items of medical history include physical profiles of said predetermined plurality of persons.

36. A comprehensive health care management system according to claim 34 in which said input means further includes a data input terminal for entering into said system said predetermined items of medical history.

37. A comprehensive health care management system according to claim 34 in which said input means includes a data input terminal responsive to inputs thereto to enter into one of said data banks data severally identifying said predetermined plurality of persons.

38. A comprehensive health care management system according to claim 34 further including means for verifying authenticity of identifications of said predetermined plurality of persons.

39. A comprehensive health care management system according to claim 34 further including means for verifying eligibility for treatment of said predetermined plurality of persons.

40. A comprehensive health care management system according to claim 39 wherein said means for verifying the eligibility for treatment of said predetermined plurality of persons further includes means for identifying pre-selected classes of treatments to be pre-certified for authorized treatment and payment.

41. A comprehensive health care management system according to claim 34 in which said means responsive to the input of data symbolic of patient symptoms includes means for tentatively identifying preventive health routines for addressing each of any identified plurality of potentially health-destructive conditions including excessive weight, high blood pressure, smoking, and insufficient exercise.

42. A comprehensive health care management system according to claim 37 in which said data input terminal includes provision for data entry from a magnetically-encoded medium.

43. A comprehensive health care management system according to claim 37 in which said data input terminal includes provision for data entry from a manual keyboard.

44. A comprehensive health care management system according to claim 34 in which one of said data bank memories includes identification of symptoms for diagnosis of each of a predetermined plurality of illnesses.

45. A comprehensive health care management system according to claim 34 in which one of said data bank memories includes data representing treatment for each of a predetermined plurality of illnesses.

46. A comprehensive health care management system according to claim 44 in which one of said data bank memories includes data representing treatment for each of said predetermined plurality of illnesses.

47. An integrated health care management system comprising:

(a) a data input terminal for entering data identifying each of a predetermined plurality of persons;

(b) a data bank memory containing predetermined items of medical history including physical profile data for said predetermined plurality of persons;

(c) health regimen recommendation means responsive to said physical profile data for said predetermined plurality of persons for generating individualized preventive health regimen recommendations for said predetermined plurality of persons including diet and exercise;

(d) symptom recording means including said data bank memory for recording symptoms associated with each of a predetermined plurality of health problems;

(e) recommend treatment means including said data bank memory for recording recommended treatment for each of said predetermined plurality of health problems;

(f) utilization review means including said data bank memory for selecting and recording identification of treatments selected for utilization review;

(g) symptom input means for inputting descriptions of patients' symptoms into said system;

(h) means responsive to input of said patients' symptoms for displaying recommended treatments, for identifying recommended treatments which are selected for utilization review and for displaying indicia identifying said recommended treatments which are selected for utilization review, said means responsive to input of said patients' symptoms being further effective to identify recommended treatments for which ancillary services are indicated;

(i) means responsive to identification of said recommended treatments for identifying payor-approved charges for said treatments;

(j) means for comparing said payor-approved charges for said treatments with corresponding actual charges assessed by a proposed health care provider and for identifying any insufficiency of payor-approved charges compared to said actual charges;

(k) means for supplying said insufficiency by payroll deduction for patients that are paid on organization payrolls;

(l) means including said utilization review means for providing medical care quality control;

(m) means for providing both in-patient and out-patient care; and

(n) means including said data bank memory for preparing recommended post-treatment routines.

48. An integrated health care management system according to claim 47 wherein when one of said recommended treatments is selected for utilization review, payment approval is withheld until data is entered into said system confirming completion of said utilization review.

49. An integrated health care management system according to claim 47 wherein said physical profile data include physical examination results.

50. An integrated health care management system according to claim 47 wherein said utilization review means includes second opinion means.

51. An integrated health care management system according to claim 47 wherein said physical profile data include physical examination results and wherein said utilization review means includes second opinion means.

52. A method of managing a comprehensive health care management system utilizing a data processor, data bank memories, input means and payment means comprising:

(a) entering into said data processor data identifying each of a predetermined plurality of persons;

(b) entering into one of said data bank memories an identification of predetermined procedures requiring utilization review;

(c) entering through said input means into said data processor data symbolic of patient symptoms for tentatively identifying a proposed mode of treatment and, when said proposed mode of treatment includes one of said predetermined procedures requiring utilization review, producing indicia indicative thereof; and

(d) preventing payment therefor by said payment means until said utilization review has been obtained and data indicative thereof has been entered in said system.

53. A method of managing a health care management system according to claim 52 is which the step of tentatively identifying a proposed mode of treatment further includes checking said proposed mode of treatment and when said proposed mode of treatment includes an ancillary service, producing indicia indicative thereof and providing said ancillary service.

54. A method of managing a health care management system according to claim 52 in which the step of tentatively identifying a proposed mode of treatment further includes the step of tentatively identifying preventive health routines for addressing each of any identified plurality of potentially health-destructive conditions including excessive weight, high blood pressure, smoking, and insufficient exercise.

55. A method of managing a health care management system utilizing a data processor, data bank memories, input means and payment means comprising:

(a) entering into said input means data identifying each of a predetermined plurality of persons;

(b) entering into one of said data bank memories an identification of predetermined items of medical history for said predetermined plurality of persons;

(c) entering into another of said data bank memories an identification of predetermined procedures requiring utilization review; and

(d) entering through said input means into said data processor data symbolic of patient symptoms for tentatively identifying a proposed mode of treatment and, when said proposed mode of treatment includes one of said predetermined procedures requiring utilization review, producing indicia indicative thereof; and

(e) preventing payment therefor until said utilization review has been obtained and data indicative thereof has been entered in said system.

56. A method of managing a health care management system according to claim 55 in which the step of entering into one of said data bank memories an identification of predetermined items of medical

57. A method of managing a health care management system according claim 55 in which said input means further includes a data input terminal and in which the method further includes the step of entering into said data input terminal of said system said predetermined items of medical history.

58. A method of managing a health care management system according to claim 55 further including the step of storing within said one of said data bank memories information individually relating to each of said predetermined plurality of persons.

59. A method of managing a health care management system according to claim 58 further including the step of verifying authenticity of identifications of said predetermined plurality of persons.

60. A method of managing a health care management system according to claim 59 further including the step of verifying eligibility for treatment of said predetermined plurality of persons.

61. A method of managing a health care management system according to claim 60 wherein the step of verifying the eligibility for treatment of said predetermined plurality of persons further includes the step of identifying pre-selected classes of treatments pre-certified for authorized treatment and payment.

62. A method of managing a health care management system according to claim 57 further including the step of entering data into said data input terminal from a magnetically-encoded medium.

63. A method of managing a health care management system according to claim 57 further including the step of manually entering data input into said data terminal through a manual keyboard.

64. A method of managing a health care management system according to claim 55 further including the step of accessing one of said data bank memories to identify symptoms for diagnosis of each of a predetermined plurality of illnesses.

65. A method of managing a health care management system according to claim 55 further including the step of accessing said data symbolic of patient symptoms and identifying a proposed mode of treatment for each of a predetermined plurality of illnesses.

66. A method of managing a health care management system according to claim 64 further including the step of accessing said data symbolic of patient symptoms and identifying a proposed mode of treatment for each of a predetermined plurality of illnesses.

67. A method of managing a comprehensive health care management system comprising:

(a) providing a data input terminal for said system for entering into said system data identifying each of a predetermined plurality of persons;

(b) establishing a data bank memory operatively connected to said system for including an identification of predetermined procedures requiring second options;

(c) entering in said data input terminal data symbolic of patient symptoms;

(d) establishing payment means;

(e) accessing said data symbolic of patient symptoms for tentatively identifying a proposed mode of treatment and,

(f) when said proposed mode of treatment includes one of said predetermined procedures requiring a second opinion, producing indicia indicative thereof and preventing payment therefor by said payment means until a second opinion has been obtained.

68. A method of managing a health care management system according to claim 67 wherein when said proposed mode of treatment includes an ancillary service, the additional step of producing indicia indicative thereof and for providing said ancillary service.

69. A method of managing a health care management system according to claim 67 further including the step of tentatively identifying preventive health routines for addressing each of any identified plurality of potentially health-destructive conditions including excessive weight, high blood pressure, smoking, and insufficient exercises.

70. A method of managing a comprehensive health care management system utilizing a data processor, data bank memories, input means and payment means comprising:

(a) providing a data input terminal for entering into said system data identifying each of a predetermined plurality of persons;

(b) establishing a first system data bank memory and entering into said first data bank memory predetermined items of medical history for said predetermined plurality of persons;

(c) establishing another system data bank memory and entering into said another data bank memory information including an identification of predetermined procedures requiring second opinions;

(d) entering into said data processor information symbolic of patient symptoms;

(e) establishing payment means;

(f) accessing one of said data bank memories for tentatively identifying a proposed mode of treatment; and,

(g) when said proposed mode of treatment includes one of said predetermined procedures requiring a second opinion, for producing indicia indicative thereof and for preventing payment therefor by said payment means until a second opinion has been obtained.

71. A method of managing a health care management system according to claim 70 in which the step of entering into said first system data bank memory predetermined items of medical history includes step of including physical profiles of said predetermined plurality of persons.

72. A method of managing a health care management system according to claim 70 further including the step of accessing said predetermined items of medical history.

73. A method of managing a health care management system according to claim 70 wherein the step of entering into said first system data bank memory predetermined items of medical history further includes the step of entering into one of said data banks data designating the identity of the payor for health care for each of said predetermined plurality of persons.

74. A method of managing a health care management system according to claim 73 further including means for verifying the authenticity of identifications of said predetermined plurality of persons.

75. A method of managing a health care management system according to claim 74 further including the step of verifying eligibility for treatment of said predetermined plurality of persons.

76. A method of managing a health care management system according to claim 75 further including the step of verifying the eligibility for treatment of said predetermined plurality of persons and identifying preselected classes of treatments pre-certified for authorized treatment and payment.

77. A method of managing a health care management system according to claim 72 further including the step of entering data into said system from a magnetically-encoded medium.

78. A method of managing a health care management system according to claim 72 further including the step of entering data into said system from a manual keyboard.

79. A method of managing a health care management system according to claim 78 further including the step of accessing one of said data bank memories to identify symptoms for diagnosis of each of a predetermined plurality of illnesses.

80. A method of managing a health care management system according to claim 70 further including the step of entering into one of said data bank memories data representing treatment for each of a predetermined plurality of illnesses.

81. A method of managing a health care management system according to claim 79 further including the step of entering into one of said data bank memories data representing treatment for each of a predetermined plurality of illnesses.

82. A method of managing a health care management system having a data processor comprising:

(a) providing a data input terminal for entering data identifying each of a predetermined plurality of persons being on a payroll of an organization;

(b) providing a data bank memory containing predetermined items of medical history for said predetermined plurality of persons;

(c) providing another data bank memory including an identification of predetermined medical procedures and pre-approved levels of payments for said predetermined medical procedures;

(d) entering into said system data indicative of performance of one of said predetermined medical procedures; and

(e) examining a level of charge made by a provider of medical services for the performed procedure and, if said level of charge exceeds the pre-approved level of payment for said procedure, for causing payment of the exceeded amount by payroll deduction.

83. A method of managing a health care management system having a data processor comprising:

(a) providing a first data input terminal at the location of a medical services provider;

(b) entering into said system through said first data input terminal data identifying each of a predeter-

mined plurality of persons being on a payroll of an organization;

(c) providing a second data terminal at the location of said organization;

(d) providing a data bank memory containing predetermined items of medical history for said predetermined plurality of persons;

(e) providing another data bank memory including an identification of predetermined medical procedures and pre-approved levels of payments for said predetermined medical procedures; and

(f) entering into said system data indicative of performance of one of said predetermined medical procedures;

(g) examining a level of charge made by a provider of medical services for the performed procedure and, if said level of charge exceeds the pre-approved level of payment for producing at the location of said second data terminal indicia indicative thereof and for permitting authorization for excess payment by said organization.

84. A method of managing a health care management system comprising:

(a) providing a data input terminal;

(b) entering into said system through said data input terminal data identifying each of a predetermined plurality of persons being subject to workmen's compensation;

(c) providing in said system a data bank memory;

(d) entering into said system an identification of predetermined medical procedures and pre-approved levels of workmen's compensation payments for said predetermined medical procedures; and

(e) examining a level of charge made by a provider of medical services for a predetermined procedure performed on one of said predetermined plurality of persons and, if said level of charge exceeds said pre-approved level of payment for said procedure, for identifying the exceeded amount and for permitting the payment of the exceeded amount by said one of said predetermined plurality of persons.

85. A method of managing a health care management system comprising:

(a) providing a data input terminal;

(b) entering data into said system for identifying each of a predetermined plurality of persons;

(c) providing a data bank memory containing predetermined items of medical history for each of said predetermined plurality of persons;

(d) providing in said data bank memory an identification of predetermined procedures requiring ancillary services; and

(e) tentatively identifying a proposed mode of treatment and, when said proposed mode of treatment includes one of said ancillary services, for producing indicia indicative thereof and for providing said one of said ancillary services.

86. A method of managing a health care management system according to claim 85 in which said predetermined items of medical history include physical profiles of said predetermined plurality of persons.

87. A method of managing a health care management system according to claim 85 in which said system further includes the step of entering into said system said predetermined items of medical history through said data input terminal.

88. A method of managing a health care management system according to claim 87 further including the step of verifying authenticity of identifications of said predetermined plurality of persons.

89. A method of managing a health care management system according to claim 88 further including the step of verifying eligibility for treatment of said predetermined plurality of persons.

90. A method of managing a health care management system according to claim 89 further including the step of identifying pre-selected classes of treatments pre-certification for authorized treatment and payment.

91. A method of managing a health care management system according to claim 85 further including the step of tentatively identifying preventive health routines for addressing each of a plurality of potentially health-destructive conditions including excessive weight, high blood pressure, smoking, insufficient and exercise.

92. A method of managing a health care management system according to claim 87 further including the step of entering data into said system from a magnetically-encoded medium.

93. A method of managing a health care management system according to claim 87 further including the step of entering data into said system through a manual keyboard.

94. A method of managing a health care management system according to claim 85 including the step of entering into said data bank memory an identification of symptoms for diagnosis of each of a predetermined plurality of illnesses.

95. A method of managing a health care management system according to claim 85 further including the step of entering into said data bank memory data representing treatment for each of a predetermined plurality of illnesses.

96. A method of managing a health care management system according to claim 94 further including the step of introducing into said data bank memory data representing treatment for each of said predetermined plurality of illnesses.

97. A method of managing a health care management system comprising:

(a) providing a data input terminal for entering data identifying each of a predetermined plurality of persons;

(b) providing a data bank memory containing predetermined items of medical history including physical profile data for said predetermined plurality of persons;

(c) including in said data bank memory health regimen recommendation data for each of a predetermined plurality of physical profiles;

(d) generating individualized preventive health regimen recommendations for each of said predetermined plurality of persons including diet and exercise;

(e) recording in said data bank memory symptoms associated with each of a predetermined plurality of health problems;

(f) recording in said data bank memory recommended treatment protocols for each of said predetermined plurality of health problems;

(g) selecting treatments for utilization review;

(h) inputting into said system data representing patients' symptoms;

(i) accessing said data bank memory means responsive to input of said patients' symptoms for displaying recommended treatments, for identifying recommended treatments which are selected for util-

zation review, for displaying indicia identifying said treatments which are selected for utilization review, and identifying those recommended treatments for which ancillary services are indicated;

(j) identifying payor-approved charges for said treatments;

(k) comparing said payor-approved charges for said treatments with corresponding actual charges assessed by a proposed health care provider and identifying any insufficiency of payor-approved charges compared to said actual charges;

(l) providing payroll deduction and supplying said insufficiency by payroll deduction for patients that are paid on organization payrolls;

(m) providing medical care quality control;

(n) providing both in-patient and out-patient care; and

(o) preparing recommended post-treatment routines.

98. A method of managing an integrated health care management system according to claim 97 further including the step of withholding payment approval for one of said treatments selected for utilization review, until data is entered into said system confirming completion of said utilization review.

99. A method of managing an integrated health care management system according to claim 97 further including the step of storing in said data bank memory physical examination results.

100. A method of managing an integrated health care management system according to claim 97 further including the step of identifying selected procedures for second opinions and wherein said utilization review includes providing second opinions.

101. A method of managing an integrated health care management system according to claim 97 further including the steps of storing examination results in said data bank memory and identifying selected procedures for second opinions.

102. A method of managing an integrated health care management system having input means, payment means and memory storage comprising:

(a) storing through said input means into said memory storage personal health profile data for each of a predetermined plurality of persons;

(b) storing into said memory storage symptoms and treatment data for each of a predetermined plurality of health profiles and problems;

(c) storing in said memory storage criteria for identifying treatments requiring utilization review;

(d) storing in said memory storage criteria for identifying treatments requiring second opinions;

(e) entering into said system information identifying a proposed medical treatment for one of said plurality of persons;

(f) identifying whether or not said proposed medical treatment requires utilization review; and

(g) preventing said system from approving payment for said proposed medical treatment if said proposed medical treatment requires utilization review until such utilization review has been conducted.

* * * * *

PETITIONER'S BRIEF

RECORD
AND
BRIEFS

Supreme Court, U.S.
FILED
DEC 2 - 2013
OFFICE OF THE CLERK

No. 12-1163

IN THE

Supreme Court of the United States

HIGHMARK INC.,

Petitioner,

v.

ALLCARE HEALTH MANAGEMENT SYSTEMS, INC.,

Respondent.

On Writ of Certiorari to the United States Court of Appeals for the Federal Circuit

BRIEF FOR PETITIONER

CYNTHIA E. KERNICK
JAMES C. MARTIN
THOMAS M. POHL
REED SMITH LLP
225 Fifth Avenue
Pittsburgh, PA 15222
(412) 288-3131

*Not admitted in DC; supervised by members of the firm

NEAL KUMAR KATYAL
Counsel of Record
DOMINIC F. PERELLA
DAVID M. GINN
R. CRAIG KITCHEN*
AMANDA K. RICE*
JONATHAN D. SHAUB*
HOGAN LOVELLS US LLP
555 13th Street, NW
Washington, DC 20004
(202) 637-5600
neal.katyal@hoganlovells.com

Counsel for Petitioner

WILSON-EPES PRINTING CO., INC. – (202) 789-0096 – WASHINGTON, D. C. 20002

QUESTION PRESENTED

Whether a district court's exceptional-case finding under 35 U.S.C. § 285, based on its judgment that a suit is objectively baseless, is entitled to deference.

RULE 29.6 DISCLOSURE STATEMENT

Petitioner Highmark Inc.'s parent corporation is Highmark Health. No publicly held company owns ten percent or more of Highmark Inc.'s stock, and no publicly held company owns ten percent or more of Highmark Health's stock.

TABLE OF CONTENTS

Page

QUESTION PRESENTED i

RULE 29.6 DISCLOSURE STATEMENT ii

TABLE OF AUTHORITIES v

OPINIONS BELOW 1

JURISDICTION 1

STATUTE INVOLVED 2

INTRODUCTION 2

STATEMENT 3

A. Background 3

B. The District Court's Fee Award 6

C. The Federal Circuit's Decision 8

SUMMARY OF ARGUMENT 11

ARGUMENT 13

I. *PIERCE* AND *COOTER* REQUIRE A UNITARY ABUSE-OF-DISCRETION STANDARD OF REVIEW FOR SECTION 285 FEE AWARDS 13

A. *Pierce* and *Cooter* Control This Case 13

B. Deferential Review Here Follows *A Fortiori* From *Pierce* And *Cooter* 24

TABLE OF CONTENTS—Continued

Page

C. Efforts To Distinguish *Pierce* And *Cooter* Are Unavailing 31

D. Deferential Review Applies Under *Pierce* And *Cooter* No Matter What Merits Standard This Court Adopts In *Octane* 34

II. THIS CASE FITS NEATLY IN THE CATEGORY OF CASES IN WHICH THIS COURT HAS ENDORSED DEFERENTIAL REVIEW 37

III. THE DECISION BELOW EXACERBATES ABUSIVE PATENT LITIGATION'S DRAG ON INNOVATION AND ECONOMIC GROWTH 44

CONCLUSION 51

TABLE OF AUTHORITIES

Page

CASES:

ALPO Petfoods, Inc. v. *Ralston Purina Co.*, 913 F.2d 958 (D.C. Cir. 1990) 31

Anderson v. *City of Bessemer City*, 470 U.S. 564 (1985) 10

BE&K Constr. Co. v. *NLRB*, 536 U.S. 516 (2002) 43

Bill Johnson's Rests., Inc. v. *NLRB*, 461 U.S. 731 (1983) 43

Bilski v. *Kappos*, 130 S. Ct. 3218 (2010) 4, 48

Blonder-Tongue Labs., Inc. v. *Univ. of Ill. Found.*, 402 U.S. 313 (1971) 44

Blue Dane Simmental Corp. v. *Am. Simmental Ass'n*, 178 F.3d 1035 (8th Cir. 1999) 30

Bolt, Beranek, & Newman, Inc. v. *McDonnell Douglas Corp.*, 521 F.2d 338 (8th Cir. 1975) 29

Bose Corp. v. *Consumers Union of U.S., Inc.*, 466 U.S. 485 (1984) 41

Brooks Furniture Mfg., Inc. v. *Dutailier Int'l, Inc.*, 393 F.3d 1378 (Fed. Cir. 2005) 34

Chambers v. *NASCO, Inc.*, 501 U.S. 32 (1991) 38

TABLE OF AUTHORITIES—Continued

Page

Checkpoint Sys., Inc. v. *All-Tag Sec. S.A.*, 711 F.3d 1341 (2013) 49

Colgate-Palmolive Co. v. *Carter Prods. Co.*, 230 F.2d 855 (4th Cir. 1956) 29

Commissioner, INS v. *Jean*, 496 U.S. 154 (1990) 36

Cooper Indus., Inc. v. *Leatherman Tool Grp., Inc.*, 532 U.S. 424 (2001) 40, 41

Cooter & Gell v. *Hartmarx*, 496 U.S. 384 (1990) ..... *passim*

Curtiss-Wright Corp. v. *Gen. Elec. Co.*, 446 U.S. 1 (1980) 38

Dixie Cup Co. v. *Paper Container Mfg. Co.*, 174 F.2d 834 (7th Cir. 1949) 27, 29

Dubil v. *Rayford Camp & Co.*, 184 F.2d 899 (9th Cir. 1950) 27, 29

Earthquake Sound Corp. v. *Bumper Indus.*, 352 F.3d 1210 (9th Cir. 2003) 31

eBay, Inc. v. *MercExchange, LLC*, 547 U.S. 388 (2006) 33, 46

Employers Council on Flexible Comp. v. *Feltman*, 384 F. App'x 201 (4th Cir. 2010) 30

Eon-Net LP v. *Flagstar Bancorp*, 653 F.3d 1314, 1324 (Fed. Cir. 2011) 18

TABLE OF AUTHORITIES—Continued

Page

Erie Railroad Co. v. *Tompkins*,
304 U.S. 64 (1938) 39

Farberware Licensing Co. v.
Meyer Mktg. Co.,
428 F. App'x 97 (2d Cir. 2011) 30

First Options of Chicago, Inc. v. *Kaplan*,
514 U.S. 938 (1995) 39

Fogerty v. *Fantasy*,
510 U.S. 517 (1994) 15, 35, 37

Fox v. *Vice*,
131 S. Ct. 2205 (2011) 23, 38

Frazier v. *Heebe*,
482 U.S. 641 (1987) 38

Graham v. *Jeoffroy Mfg., Inc.*,
253 F.2d 72 (5th Cir. 1958) 29

Hardinge Co. v. *Laughlin Steel Corp.*,
275 F.2d 37 (3d Cir. 1960) 29

Hensley v. *Eckerhart*,
461 U.S. 424 (1983) 22, 23, 38

Highmark, Inc. v. *Allcare Health Mgmt.*
Sys., Inc.,
329 F. App'x 280 (Fed. Cir. 2009) 6

Highmark, Inc. v. *Allcare Health Mgmt.*
Sys., Inc.,
687 F.3d 1300 (Fed. Cir. 2012) 17

TABLE OF AUTHORITIES—Continued

Page

Highmark, Inc. v. *Allcare Health Mgmt. Sys., Inc.*, 706 F. Supp. 2d 713 (N.D. Tex. 2010) 1

Hoge Warren Zimmermann Co. v. *Nourse & Co.*, 293 F.2d 779 (6th Cir. 1961) 29

ICU Med., Inc. v. *Alaris Med. Sys., Inc.*, 2007 WL 6137003 (C.D. Cal. 2007), *aff'd*, 558 F.3d 1368 (Fed. Cir. 2009) 17

Johnson v. *Jones*, 149 F.3d 494 (6th Cir. 1998) 30

Koon v. *United States*, 518 U.S. 81 (1996) 25, 26, 37

Larchmont Eng'g, Inc. v. *Toggenburg Ski Ctr.*, 444 F.2d 490 (2d Cir. 1971) 29

Lucent Techs., Inc. v. *Gateway, Inc.*, 580 F.3d 1301 (Fed. Cir. 2009) 5

Marctec, LLC v. *Johnson & Johnson*, 2010 WL 680490 (S.D. Ill. 2010), *aff'd*, 664 F.3d 907 (Fed. Cir. 2012) 17

Mayo Collaborative Servs. v. *Prometheus Labs., Inc.*, 132 S. Ct. 1289 (2012) 4

McAllister v. *United States*, 348 U.S. 19 (1954) 39

TABLE OF AUTHORITIES—Continued

Page

Medtronic Navigation, Inc. v. *BrainLAB Medizinische Computersysteme GmbH*, 603 F.3d 943 (Fed. Cir. 2010) 30

Milgo Elec. Corp. v. *United Bus. Comm'cns, Inc.*, 623 F.2d 645 (10th Cir. 1980) 29-30

Miller v. *Fenton*, 474 U. S. 104 (1985) 16, 38

Monolithic Power Sys., Inc. v. *O2 Micro Int'l Ltd.*, 726 F.3d 1359 (Fed. Cir. 2013) 15

National Ass'n of Prof'l Baseball Leagues, Inc. v. *Very Minor Leagues, Inc.*, 223 F.3d 1143 (10th Cir. 2000) 30

National Bus. Forms & Printing, Inc. v. *Ford Motor Co.*, 671 F.3d 526 (5th Cir. 2012) 30

National Hockey League v. *Metro. Hockey Club, Inc.*, 427 U. S. 639 (1976) 38

Newman v. *Piggie Park Enters., Inc.*, 390 U.S. 400 (1968) (per curiam) 35

Norton Co. v. *Carborundum Co.*, 530 F.2d 435 (1st Cir. 1976) 29

Noxell Corp. v. *Firehouse No. 1 Bar-B-Que Rest.*, 771 F.2d 521 (D.C. Cir. 1985) 25, 35

TABLE OF AUTHORITIES—Continued

Page

Oetiker v. *Jurid Werke GmbH*,
671 F.2d 596 (D.C. Cir. 1982) 30

Old Reliable Wholesale, Inc. v.
Cornell Corp.,
635 F.3d 539 (Fed. Cir. 2011) 13, 35, 39

Ornelas v. *United States*,
517 U.S. 690 (1996) 40, 41

Park-In-Theatres, Inc. v. *Perkins*,
190 F.2d 137 (9th Cir. 1951) 27

Pennsylvania v. *Del. Valley*
Citizens' Council,
483 U.S. 711 (1987) 23

Pierce v. *Underwood*,
487 U.S. 552 (1988) ..... *passim*

Piper Aircraft Co. v. *Reyno*,
454 U.S. 235 (1981) 38

Precision Links Inc. v. *USA Prods. Grp., Inc.*,
No. 2012-1461, 2013 WL 2450630 (2013) 49

Premier Elec. Const. Co. v. *Nat'l Elec.*
Contractors Ass'n, Inc.,
814 F.2d 358 (7th Cir. 1987) 43

Professional Real Estate Investors, Inc. v.
Columbia Pictures Indus., Inc.,
508 U.S. 49 (1993) (*PRE*) 42, 43

R.M. Palmer Co. v. *Luden's Inc.*,
236 F.2d 496 (3d Cir. 1956) 28

TABLE OF AUTHORITIES—Continued

Page

Salve Regina College v. *Russell*,
499 U.S. 225 (1991) 37,39, 40

Schmidt v. *Zazzara*,
544 F.2d 412 (9th Cir. 1976) 29

Securacomm Consulting, Inc. v.
Securacom Inc.,
224 F.3d 273 (3d Cir. 2000) 30

Slimfold Mfg. Co. v. *Kinkead, Inc.*,
932 F.2d 1453 (Fed. Cir. 1991) 30

Stephen W. Boney, Inc. v.
Boney Servs., Inc.,
127 F.3d 821 (9th Cir. 1997) 31

Talon, Inc. v. *Union Slide Fastener, Inc.*,
266 F.2d 731 (9th Cir. 1959) 29

Tamko Roofing Prods., Inc. v.
Ideal Roofing Co.,
282 F.3d 23 (1st Cir. 2002) 30

Taurus IP, LLC v. *DaimlerChrysler Corp.*,
726 F.3d 1306 (2013) 49

Technograph Printed Circuits Ltd. v.
Methode Elecs., Inc.,
484 F.2d 905 (7th Cir. 1973) 29

TE-TA-MA Truth Found.-Family of URI, Inc.
v. *World Church of the Creator*,
392 F.3d 248 (7th Cir. 2004) 30

TABLE OF AUTHORITIES—Continued

Page

Tire Kingdom, Inc. v. *Morgan Tire & Auto, Inc.*,
253 F.3d 1332 (11th Cir. 2001) 30

Topliff v. *Topliff*,
145 U.S. 156 (1892) 38

United States v. *DiSomma*,
951 F.2d 494 (2d Cir. 1991) 26

United States v. *Rivera*,
994 F.2d 942 (1st Cir. 1993) 25, 26

CONSTITUTIONAL PROVISIONS:

U.S. Const., Article I, § 8, cl. 8 47

STATUTES:

15 U.S.C. § 1117(a)(3) 29

18 U.S.C. § 3145(c) 25

28 U.S.C. § 1254(1) 1

28 U.S.C. § 2412(d) 12, 27

35 U.S.C. § 70 26

35 U.S.C. § 285 ..... *passim*

35 U.S.C. § 299 46

Pub. L. No. 79-587, 60 Stat. 778 (1946) 27

Pub. L. No. 82-593, 66 Stat. 792 (1952) 27

Pub. L. No. 93-600, 88 Stat. 1955 (1975) 30

Pub. L. No. 111-349, 124 Stat. 3674 (2011) 33

TABLE OF AUTHORITIES—Continued

Page

RULES:

Fed. R. Civ. P. 11 ..... *passim*

LEGISLATIVE:

S. Rep. No. 79-1503 (1946) 27

S. Rep. No. 82-1979 (1952) 28

OTHER AUTHORITIES:

J. Allison *et al.*, *Patent Quality and Settlement Among Repeat Patent Litigants*, 99 Geo. L.J. 677 (2011) 47

Am. Intellectual Property Law Ass'n, *Report of the Economic Survey 2013* 44

J. Bessen *et al.*, *The Private and Social Costs of Patent Trolls* (Boston Univ. Sch. of Law Working Paper No. 11-45, 2011) 47

J. Bessen & M. Meurer, *The Direct Costs from NPE Disputes* (forthcoming 99 Cornell L. Rev. 2014) 45, 47

C. Chien, *Of Trolls, Davids, Goliaths, and Kings: Narratives and Evidence in the Litigation of High-Tech Patents*, 87 N.C. L. Rev. 1571 (2009) 45

C. Chien, *Patent Assertion Entities: Presentation to the DOJ/FTC Hearing on PAEs* (Dec. 10, 2012) 46

C. Chien, *Patent Trolls by the Numbers*, Patently-O, Mar. 14, 2013 46

TABLE OF AUTHORITIES—Continued

Page

C. Chien, *Startups and Patent Trolls* (Santa Clara Univ. Sch. of Law Legal Studies Research Paper No. 09-12, Sept. 2012) 48

S. Childress & M. Davis, *Federal Standards of Review* (4th ed. 2010) 38

C. Cotropia et al., Patent Assertion Entities (PAEs) Under the Microscope (Illinois Public Law and Legal Theory Research Paper No. 14-17, 2013) 46

P.J. Federico, *Commentary on the New Patent Act*, 35 U.S.C.A. 1 (1954), *reprinted at* 75 J. Pat. & Trademark Off. Soc'y 161 (1993) 27

T. Holbrook, *Patents, Presumptions, and Public Notice*, 86 Ind. L.J. 779 (2011) 33

Judicial Business of the United States Courts, *2012 Annual Report of the Director* 47

Judicial Business of the United States Courts, *2011 Annual Report of the Director* 33

G. Magliocca, *Blackberries and Barnyards: Patent Trolls and the Perils of Innovation*, 82 Notre Dame L. Rev. 1809 (2007) 50

D. Schwartz, *The Rise of Contingent Fee Representation in Patent Litigation*, 64 Ala. L. Rev. 335 (2012) 45, 46

TABLE OF AUTHORITIES—Continued

Page

Webster's New Int'l Dictionary (2d ed. 1950) 25

B. Yeh, Cong. Research Serv., R42668, *An Overview of the "Patent Trolls" Debate* (2012) 45

IN THE

Supreme Court of the United States

No. 12-1163

HIGHMARK INC.,

Petitioner,

v.

ALLCARE HEALTH MANAGEMENT SYSTEMS, INC.,

Respondent.

On Writ of Certiorari to the United States Court of Appeals for the Federal Circuit

BRIEF FOR PETITIONER

OPINIONS BELOW

The District Court's opinion is reported at 706 F. Supp. 2d 713 (Pet. App. 44a). The Federal Circuit's decision is reported at 687 F.3d 1300 (Pet. App. 1a). The Federal Circuit's order denying rehearing *en banc* is reported at 701 F.3d 1351 (Pet. App. 179a).

JURISDICTION

The Federal Circuit entered judgment on August 7, 2012, and denied rehearing on December 6, 2012. Pet. App. 1a, 181a. On February 4, 2013, the Chief Justice extended the time to file the petition to April 5, 2013. This Court's jurisdiction rests on 28 U.S.C. § 1254(1).

STATUTE INVOLVED

Section 285 of the Patent Act, 35 U.S.C. § 285, provides: "The court in exceptional cases may award reasonable attorney fees to the prevailing party."

INTRODUCTION

Section 285 of the Patent Act asks a court "to answer a single question—'Is this case exceptional?' " Pet. App. 213a; 35 U.S.C. § 285. In *Octane Fitness LLC* v. *Icon Health and Fitness, Inc.*, No. 12-1184, this Court will decide what it means for a case to be "exceptional." Regardless of which substantive standard the Court settles on in *Octane*, a district court's exceptional-case finding must be reviewed for abuse of discretion.

That result is dictated by the Court's decisions in *Pierce* v. *Underwood*, 487 U.S. 552 (1988), and *Cooter & Gell* v. *Hartmarx*, 496 U.S. 384 (1990). In *Pierce* and *Cooter*, this Court held that abuse of discretion is the appropriate standard of review for district court findings akin to the Section 285 exceptional-case determination. In so doing, it outlined several factors that are critical to determining whether a mixed question of law and fact should be reviewed deferentially. Each one cuts in favor of a deferential standard for exceptional-case findings.

Indeed, the case for deferential review is even stronger for Section 285 findings than it was in *Pierce* and *Cooter*. While the congressional language at issue in those cases merely permitted the inference that Congress intended district court findings to be viewed deferentially, the text of Section 285 clearly reflects Congress's intent to

commit the exceptional-case question to a district court's discretion. And while the Court in *Pierce* and *Cooter* lacked a "long history of appellate practice" to shed light on the standard-of-review question, appellate courts have long and consistently examined Section 285 fee awards through a deferential lens. Moreover, there is a compelling policy rationale for deferential review: It makes affirmance of fee awards more likely and thus helps dissuade patent "trolls" and others from pursuing the frivolous suits that are clogging federal court dockets and imposing a multi-billion-dollar drag on the U.S. economy.

This case is a perfect illustration of all of these points. After more than four years of discovery and litigation, and after a painstaking review of the case, *see* Pet. App. 44a-178a, the district court exercised its discretion and awarded fees, specifically concluding that Allcare had engaged in "the sort of conduct that gives the term 'patent troll' its negative connotation." Pet. App. 69a n.6. Yet the Federal Circuit disregarded the district court's exhaustive findings and reversed. In doing so, it relied on a newly minted claim-construction theory that Allcare did not advance and that is inconsistent with concessions made by Allcare's own expert. The Federal Circuit's decision was wrong and should be reversed.

STATEMENT

A. Background

Allcare is a patent assertion entity whose sole business is licensing U.S. Patent No. 5,301,105 (the '105 patent) through litigation and the threat of litigation. Allcare obtained the '105 patent for

$75,000 through an assignment from the inventor. The patent discloses a "health management system" meant to facilitate the interaction of a physician, patient, employer, bank, and insurance company. Pet. App. 3a. The primary patent claim at issue here covers a vague method of entering patient symptom data into a data processor for the purpose of "tentatively identifying" a proposed treatment. *Id.* The system is then supposed to indicate whether the proposed treatment appears on a list of procedures that must be manually reviewed for medical necessity (a process known as "utilization review") and, if so, to suspend payment until the necessary review is complete. *Id.*[1]

Following a failed effort to voluntarily license the '105 patent, Allcare turned to more underhanded means: It commissioned a company called Seaport Surveys to conduct misleading telephone "surveys" to try to identify companies using computer systems in the utilization review process. Pet. App. 45a; J.A. 467. A Seaport Surveys employee, reading from a script drafted by Allcare (Pet. App. 84a), would claim to be a "consultant" attempting to "identify organizations that are leaders in the electronic processing of authorizations and referral requests." J.A. 491-92. He would then ask a series of broad questions about the company's computer system capabilities. Allcare compiled a list of potential litigation targets based on the answers to those broad survey questions. J.A. 498-99.

---

[1] As Judge Mayer observed in his dissent below, the '105 patent is probably invalid under Section 101's subject matter eligibility requirements. Pet. App. 41a-43a; *see Mayo Collaborative Servs.* v. *Prometheus Labs., Inc.*, 132 S. Ct. 1289 (2012); *Bilski* v. *Kappos*, 130 S. Ct. 3218 (2010).

In 2002, Allcare added a new target to its list: Highmark, a non-profit Blue Cross Blue Shield Plan that provides health insurance to its members. Allcare sent Highmark a letter claiming that it had commissioned an analysis of "Highmark's transaction processing systems" and that it believed these systems infringed the '105 patent. Pet. App. 45a-46a. (As it turned out, Allcare had never commissioned the purported analysis or done any other substantial pre-filing investigation. *See* Pet. App. 53a-66a.) In the correspondence that followed, Highmark pointed out that it could not possibly be infringing the patent because its computer system was not used for "tentatively identifying" proposed treatments, as the patent required. Publicly available information confirmed that point. Pet. App. 66a. Allcare nevertheless persisted in its demand for licensing fees and threatened a lawsuit that would lead to millions of dollars in legal fees and "substantial damages." Pet. App. 45a. Rather than acquiesce, Highmark sought a declaratory judgment of non-infringement and invalidity. Allcare counterclaimed for infringement of claims 52, 53, and 102 of the '105 patent. Pet. App. 5a, 47a.

After four years of costly and burdensome discovery, Highmark moved for summary judgment. Allcare did not even oppose summary judgment on claim 102, and eventually withdrew that claim with prejudice. Pet. App. 5a. The District Court then granted summary judgment for Highmark on claims 52 and 53, finding that Highmark's system plainly did not include at least one critical element of those claims. *See Lucent Techs., Inc.* v. *Gateway, Inc.*, 580 F.3d 1301, 1317 (Fed. Cir. 2009) ("To infringe a

method claim, a person must have practiced all steps of the claimed method.").

Specifically, claim element 52(c) required "entering * * * data symbolic of patient symptoms for tentatively identifying a proposed mode of treatment." Pet. App. 3a. The District Court found that that element required a physician to input a patient's symptoms into a computer system, which would respond with a list of potential treatments. Pet. App. 73a. But as Allcare's own expert admitted, and as Highmark consistently had pointed out from the outset, in Highmark's computer system the physician herself enters the symptoms *and* proposed treatment into the system. *Id.* A physician who uses Highmark's system is not, therefore, entering data "*for* tentatively identifying a proposed mode of treatment," because the physician has already identified the treatment herself. Pet. App. 75a-76a (emphasis added). Because this element was missing, Highmark could not infringe claim 52. Further, because claim 53 was dependent upon claim 52 and thus included all of its limitations, summary judgment was mandated on that claim as well.

Allcare appealed to the Federal Circuit, which summarily affirmed without a written opinion. *Highmark, Inc.* v. *Allcare Health Mgmt. Sys., Inc.*, 329 F. App'x 280 (Fed. Cir. 2009). Then-Chief Judge Michel chastened Allcare's counsel at argument that his position on infringement "makes no sense to me at all." J.A. 636.

B. The District Court's Fee Award

Highmark moved for fees under Section 285 of the Patent Act, which provides that a "court in exceptional cases may award reasonable attorney

fees to the prevailing party." 35 U.S.C. § 285. The District Court conducted an extensive review of the record, covering the ground from Allcare's inadequate pre-filing investigation to its assertion and eventual withdrawal of frivolous claims and defenses. After reviewing the travel of the case, the District Court concluded that it was exceptional under Section 285. Pet. App. 90a-92a.

The court relied on a broad range of considerations to support its finding. For example, it determined that Allcare had not adequately investigated its case before filing, and that an investigation would have shown that Highmark was not infringing Allcare's patent. Pet. App. 64a-66a. As the court put it, "Allcare had not done its homework when it began trolling for dollars and threatening litigation." Pet. App. 69a; *see also* Pet. App. 93a (noting that there was "no apparent investigation by counsel"). Even after litigation commenced, Allcare passed up an opportunity to have its expert inspect Highmark's system to determine whether it fell within the terms of the patent claims. Pet. App. 70a. The District Court likewise found that Allcare continued to pursue "meritless allegations after the lack of merit became apparent," Pet. App. 77a, and, indeed, after they were shown to be "without support" by Allcare's "own expert's report and deposition testimony." Pet. App. 78a. Allcare even "appear[ed] to acknowledge that it continued to pursue meritless allegations as insurance or leverage." *Id.*

Moreover, the District Court pointed to numerous instances of Allcare's "vexatious" and "deceitful" conduct over the course of the litigation. Pet. App. 90a. It found that Allcare had used the Seaport survey "as a ruse to identify potential targets for

licensing demands"; that it had asserted a frivolous res judicata defense; that it had changed its position several times on claim construction "[w]ithout reasonable explanation" and after court-ordered deadlines; and that it had made misrepresentations to another district court in order to get the case transferred to the Northern District of Texas. Pet. App. 69a, 82a-83a, 91a. In another order, the District Court clarified that Allcare had done all of this in subjective bad faith. Pet. App. 175a.

The District Court's fee-shifting opinion spanned more than 55 pages. Pet. App. 44a-178a. And it concluded, after an extensive factual review, that Allcare had engaged in "the sort of conduct that gives the term 'patent troll' its negative connotation." Pet. App. 69a n.6. The record "firmly convince[d]" the court that Allcare's use of "frivolous" and "vexatious tactics" made the case exceptional under Section 285. Pet. App. 82a, 90a-92a.[2]

C. The Federal Circuit's Decision

The Federal Circuit reversed the District Court's fee award in part. Pet. App. 14a-31a. Although Section 285 says only that district courts may shift fees in "exceptional" cases, the Federal Circuit has grafted a number of rigid requirements onto the

---

[2] The District Court initially imposed sanctions against Allcare's attorneys under Federal Rule of Civil Procedure 11, but later vacated those sanctions for procedural reasons and declined to re-impose them. Pet. App. 86a-90a, 99a-102a, 151a-52a. It took care to note that its decision to vacate the Rule 11 sanctions had "no bearing on the exceptional-case finding." Pet. App. 101a; *see also* Pet. App. 171a-78a (denying Allcare's motion to reconsider the attorney's fee award).

statute's language. In particular, it has permitted district courts to shift fees only when a party has (1) asserted a "frivolous claim," (2) engaged in "inequitable conduct before the Patent and Trademark Office," or (3) engaged in "misconduct during litigation." Pet. App. 8a. Fee-shifting cases in the first category have two further requirements. To qualify as "frivolous" under the Federal Circuit's precedent, a claim must be "objectively baseless" and "brought in subjective bad faith." Pet. App. 8a.

The Federal Circuit considered the "central issue" in Allcare's appeal to be whether the "infringement counterclaims against Highmark were frivolous." Pet. App. 8a. It approached that question "on a claim by claim basis," conducting a "single backwards-looking inquiry" into the "reasonableness" of each claim "in light of the full record." Pet. App. 12a-13a. And it reviewed the District Court's findings through a lens it had never before employed. In reviewing objective-baselessness findings, the Federal Circuit had long applied clear-error review. Pet. App. 207a-09a. The majority in this case abandoned that standard. Instead, it held that objective baselessness is "a question of law based on underlying mixed questions of law and fact and is subject to *de novo* review." Pet. App. 9a (internal quotation marks omitted). It thus reviewed the District Court's determination of objective reasonableness "without deference." *Id.*

Even without deference, the panel majority affirmed that Allcare's "claim 102 infringement litigation warranted an exceptional case finding." Pet. App. 14a. But it reversed the fee award as to claim 52. It held that Allcare's construction of claim 52 was not objectively baseless because there "was

support in the [patent] specification for Allcare's position." Pet. App. 20a. The majority admitted that Allcare had never "pointed to the specification as an argument in support of its theory." Pet. App. 21a. But, reviewing *de novo*, it held that its own hypothetical theory precluded an exceptional-case finding. Pet. App. 21a-22a. The panel majority also held that none of the instances of litigation misconduct found by the District Court separately warranted an exceptional-case finding. Pet. App. 24a. In the end, the majority remanded to the district court "for a calculation of attorneys' fees based on the frivolity of the claim 102 allegations only." Pet. App. 31a.

Judge Mayer filed a sharply worded dissent. He wrote that deferential review was required not just by Federal Circuit case law but also by this Court's decisions in *Cooter & Gell* v. *Hartmarx*, 496 U.S. 384 (1990), and *Pierce* v. *Underwood*, 487 U.S. 552 (1988). Pet. App. 31a, 37a-39a. He further decried the Federal Circuit's "increasing infatuation with *de novo* review of factual determinations," which is "an enormous waste of resources and vitiates the critically important fact-finding role of the district courts." Pet. App. 32a-33a (citing *Anderson* v. *City of Bessemer City*, 470 U.S. 564, 575 (1985)). And he explained why deference is particularly appropriate in the exceptional-case context:

> As an appellate court, we are ill-suited to weigh the evidence required to make an exceptional case determination. In many cases, a trial court will declare a case exceptional only after spending months—and sometimes even years—reviewing the evidence, hearing testimony, and evaluating

> the conduct of the litigants. Its intimate familiarity with the facts of the case, and the parties involved, place it in a far superior position to judge whether or not a litigant's claims of infringement were objectively baseless.

Pet. App. 35a-36a. Finally, Judge Mayer demonstrated that—evaluated through the proper standard of review—this is an easy case: "Given that Allcare persisted in advancing infringement allegations that were both in direct conflict with the plain claim language and unsupported by the testimony of its own expert, the district court had ample grounds for concluding that Allcare's allegations of infringement of claim 52(c) were frivolous." Pet. App. 40a. He would have affirmed the fee award in full.

Highmark's subsequent petition for rehearing en banc was denied over the dissent of five judges, who again emphasized the inconsistency between the panel majority's decision and this Court's precedent. Pet. App. 190a-214a. This Court granted certiorari.

SUMMARY OF ARGUMENT

I. This case begins and ends with *Pierce* and *Cooter*. In those decisions, the Court addressed fee and sanction standards directly analogous to the Federal Circuit's "objective baselessness" test. And in both cases the Court held that appellate courts should review awards under such provisions for abuse of discretion. The Court explained that "issues involving * * * supervision of litigation"—including fee awards—are "common[ly]" given "abuse-of-discretion review." *Pierce*, 487 U.S. at 558 n.1. And it set forth many factors that cut in favor of unitary

abuse-of-discretion review in such cases, even if a particular case happens to implicate "purely legal issue[s]." *Id.* at 560. Every one of those factors favors abuse-of-discretion review here too.

Indeed, this is an *a fortiori* case. Section 285's text is even more suggestive of deference than the statutory texts at issue in *Pierce* and *Cooter*. Moreover, *Pierce* explained that standards of review can and should be derived from "a long history of appellate practice," 487 U.S. at 558, and here there is such a history: Courts long have reviewed exceptional-case findings under Section 285 and the Lanham Act for abuse of discretion. There is no reason to deviate from that history now. The two arguments the Federal Circuit offered for breaking from that historical practice, and flouting *Pierce* and *Cooter*, cannot bear the weight the court put on them.

II. Surveying this Court's standard-of-review jurisprudence more broadly, it is all the more clear that this case belongs in the category of cases that warrant deferential review. The exceptional-case inquiry shares key features with the issues this Court has held should be reviewed deferentially. And it looks nothing like the issues for which this Court has endorsed *de novo* review.

III. Finally, Section 285's role in deterring abusive patent litigation provides an additional reason for reviewing district court findings deferentially. The exceptional-case fee award is one of the few tools courts have for deterring patent assertion entities—better known as "patent trolls"—from pursuing frivolous claims in hopes of coercing settlements. District courts are in the best position to deploy that

tool effectively, and according them deference will help protect innovators from frivolous suits.

ARGUMENT

I. *PIERCE* AND *COOTER* REQUIRE A UNITARY ABUSE-OF-DISCRETION STANDARD OF REVIEW FOR SECTION 285 FEE AWARDS.

A. *Pierce* And *Cooter* Control This Case.

This Court has twice considered how appellate courts should review fee awards or sanctions in contexts functionally identical to the Section 285 "objectively baseless" inquiry adopted by the Federal Circuit.[3] Both times it has concluded that such awards should be reviewed for abuse of discretion. So too here.

1. In *Pierce*, the Court considered the proper standard of review for fee awards under the Equal Access to Justice Act (EAJA), 28 U.S.C. § 2412(d). The EAJA authorizes courts to award attorney's fees upon finding that the United States' position was not "substantially justified." *Id.* A position is not substantially justified if it has no "reasonable basis in both law and fact," *Pierce*, 487 U.S. at 565—a standard effectively identical to the Federal Circuit's Section 285 test, which deems a position objectively baseless if "no reasonable litigant could believe it would succeed." *Old Reliable Wholesale, Inc.* v. *Cornell Corp.*, 635 F.3d 539, 544 (Fed. Cir. 2011).

With neither an "explicit statutory command" nor a "history of appellate practice" to guide it, *Pierce*, 487 U.S. at 558, this Court relied on considerations of

---

[3] Any change to this inquiry precipitated by the Court's resolution of *Octane* would only create additional arguments in favor of abuse-of-discretion review. *See infra* at 35-37.

"sound judicial administration" to hold that a district court's substantial-justification finding is reviewable only for abuse of discretion. *Id.* at 563. In so doing, the Court recognized that whether a litigant's position was substantially justified will sometimes turn on "purely legal" issues. *Id.* at 560. It nevertheless held that abuse of discretion is the proper standard of review across the board.

Cooter was much the same. There, the Court considered the standard of review for decisions imposing Rule 11 sanctions. *See* 496 U.S. at 399-402. Rule 11 authorizes sanctions where an attorney advances a position that is not "warranted by existing law" or is lacking in "evidentiary support," Fed. R. Civ. P. 11(b)—again, a standard practically indistinguishable from the Federal Circuit's "objective baselessness."

Prior to *Cooter*, some courts of appeals had applied three different standards of review to different kinds of Rule 11 questions—clear-error review of findings regarding the factual basis for a claim, *de novo* review of findings about whether a claim was "warranted by existing law," and abuse-of-discretion review of the amount of sanctions imposed. *Cooter*, 496 U.S. at 399. That approach mirrors the trifurcated standard the Federal Circuit adopted below for Section 285. *See* Pet. App. 9a-12a (reviewing bad-faith finding for clear error, objective baselessness *de novo*, and the fee award for abuse of discretion). And *Cooter* squarely rejected it. As in *Pierce*, the Court held that "*all* aspects" of a district court's decision to impose Rule 11 sanctions—including its "legal conclusions"—should be reviewed under a unitary, abuse-of-discretion standard. *Cooter*, 496 U.S. at 401 (emphasis added).

2. *Pierce* and *Cooter* control here. Like Section 285's exceptional-case standard—and the "objective baselessness" gloss put on it by the Federal Circuit—*Pierce*'s "substantial justification" and *Cooter*'s "warranted by existing law" are mixed questions of law and fact, arise in proceedings ancillary to the merits, and implicate "supervision of litigation" issues that district courts are best positioned to resolve. *Pierce*, 487 U.S. at 558 n.1, 560. Indeed, every one of the factors that led this Court to endorse a unitary, deferential review standard in *Pierce* and *Cooter* militates in favor of the same standard here.

Statutory Text. In *Pierce*, the Court found that the relevant statutory text "suggest[ed]," though it did "not compel[ ]," the conclusion that Congress meant for appellate courts to afford "some deference to the district court upon appeal." 487 U.S. at 559. Section 285's language is at least as suggestive of deference. The statute provides that courts "may" award fees, and "[t]he word 'may' clearly connotes discretion." *Fogerty* v. *Fantasy, Inc.*, 510 U.S. 517, 533 (1994). There is no question that the ultimate decision to award fees is confided to the district court's discretion. This grant of discretion implies a limitation on the scope of appellate review, as even the Federal Circuit acknowledges. *See, e.g.*, *Monolithic Power Sys., Inc.* v. *O2 Micro Int'l Ltd.*, 726 F.3d 1359, 1365 (Fed. Cir. 2013).

The phrase "exceptional cases," too, suggests deferential review. As discussed at length below, the ordinary meaning of "exceptional" denotes the kind of case-by-case, holistic judgment best left to district courts' discretion. *See infra* at 25-28. And the reference to exceptional "cases"—which focuses the inquiry on the overall course of the litigation rather

than on particular contentions—suggests a primary role for the district judge who has lived with a case since its inception.

Best-Positioned Decisionmaker. After gleaning what guidance they could from the relevant texts, *Pierce* and *Cooter* turned to the question whether " 'one judicial actor is better positioned than another to decide the issue in question.' " *Pierce*, 487 U.S. at 560 (quoting *Miller* v. *Fenton*, 474 U.S. 104, 114 (1985)). And in both cases, the Court determined that the district court was that judicial actor. In *Pierce*, the Court explained that "[s]ome of the elements that bear upon whether the Government's position '*was* substantially justified' may be known only to the district court":

> Not infrequently, the question will turn upon not merely what was the law, but what was the evidence regarding the facts. By reason of settlement conferences and other pretrial activities, the district court may have insights not conveyed by the record, into such matters as whether particular evidence was worthy of being relied upon, or whether critical facts could easily have been verified by the Government.

Id. Likewise, in *Cooter* the Court explained that "[a] district court's ruling that a litigant's position is factually well grounded and legally tenable for Rule 11 purposes is similarly fact specific." 496 U.S. at 403. For example, "to determine whether an attorney's prefiling inquiry was reasonable, a court must consider all the circumstances of a case. An inquiry that is unreasonable when an attorney has months to prepare a complaint may be reasonable

when he has only a few days before the statute of limitations runs." *Id.* at 401-02.

Exceptional-case findings, including objective-baselessness determinations, work exactly the same way. Courts evaluate objective baselessness through "a single backwards-looking inquiry into the reasonableness of the claims in light of the full record." *Highmark, Inc.* v. *Allcare Health Management Sys., Inc.*, 687 F.3d 1300, 1310-11 (Fed. Cir. 2012). And, just like in the EAJA and Rule 11 contexts, objective baselessness often turns on quintessentially factual considerations—for example, the amount of evidence supporting a given theory; the thoroughness of initial investigations; or whether and when particular arguments were advanced. In *ICU Medical, Inc.* v. *Alaris Medical Systems, Inc.*, 2007 WL 6137003 (C.D. Cal. 2007), *aff'd*, 558 F.3d 1368 (Fed. Cir. 2009), for example, the district court's objective-baselessness finding turned on a detailed analysis of the patent's prosecution history, the facts on the ground prior to the suit's filing, and the litigant's continued reliance on deficient arguments after becoming aware of their deficiencies. *Id.* at *4-*9. Likewise, in *Marctec, LLC* v. *Johnson & Johnson*, 2010 WL 680490 (S.D. Ill. 2010), *aff'd*, 664 F.3d 907 (Fed. Cir. 2012), the court's objective-baselessness finding turned on the litigant's baseless claim-construction arguments, mischaracterizations of fact and law made at various points throughout the litigation, and arguments that contradicted the litigant's evidence or were based on evidence the court had excluded. *Id.* at *3-*10.

A Section 285 objective-baselessness finding is thus precisely the kind of "supervision of litigation" issue—frequently bound up with factual and

temporal questions—that district courts are best positioned to resolve. *Pierce*, 487 U.S. at 558 n.1. District courts, which often live with a case for years, are on "the front lines of litigation" and intimately familiar with the way these cases progress. *Cooter*, 496 U.S. at 404. Appellate courts, which have only cold records and short oral arguments to go on, are far removed from the relevant context. Indeed, the Federal Circuit itself has made exactly this point: "Having only the briefs and the cold record, and with counsel appearing for us for only a short period of time, we are not in the position to second-guess the trial court's judgment." *Eon-Net LP* v. *Flagstar Bancorp*, 653 F.3d 1314, 1324 (Fed. Cir. 2011). Or, as this Court put it in *Cooter*: "Familiar with the issues and litigants, the district court is better situated than the court of appeals to marshal the pertinent facts and apply the fact-dependent legal standard." 496 U.S. at 402.

This case illustrates the point. With a complete grasp of the litigation as a whole, the district court, "in a thorough and well-reasoned opinion," Pet. App. 39a, provided a detailed analysis of the facts and legal arguments Allcare advanced at various stages of the suit. *See id.* at 44a-102a. It supported its objective-baselessness conclusion with specific findings related to the adequacy of Allcare's pre-filing investigation, the timing of Allcare's arguments, and the company's ever-changing positions. *See id.* at 51a-86a. In marked contrast, the Federal Circuit's conclusion that Allcare's suit was not objectively baseless turned on claim-construction arguments that the company never advanced, *see id.* at 21a, and that contradicted stipulations and ignored expert concessions,

see id. at 73a-74a, 133a. Moreover, the panel simply assumed—without analysis—that Allcare's *infringement* claim would not have been objectively baseless under the panel's new claim-construction theory. *See id.* at 22a. In the end, the district court was able to evaluate Allcare's suit in full view of the context. The court of appeals, by contrast, never had the bigger picture.

Efficiency Costs. *Pierce* and *Cooter* concluded that the inefficiencies accompanying *de novo* review also cut in favor of an abuse-of-discretion standard. As the Court put it in *Pierce*, "even where the district judge's full knowledge of the factual setting can be acquired by the appellate court, that acquisition will often come at unusual expense[.]" 487 U.S. at 560. It would require the appellate court "to undertake the unaccustomed task of reviewing the entire record, not just to determine whether there existed the usual minimum support for the merits determination made by the factfinder below, but to determine whether urging of the opposite merits determination was substantially justified." *Id.*

Pierce took pains to explain that such inefficiency occurs even when a fee award turns on a "purely legal issue governing the litigation." *Id.* Because fee awards are premised on the weakness of the opposing party's position, the Court explained, they are often sought in cases that settle or in which there is no appeal from the district court's merits adjudication. *Id.* Thus the court of appeals is forced to learn a case that would never come before it on the merits. Moreover, even if there is a merits appeal, *de novo* review still would "require the appellate court to invest substantial additional time." *Id.* That is so because the "separate-from-the-merits" fee appeal

asks an entirely different question than the merits appeal: "not what the law now is, but what the [losing party] was substantially justified in believing it to have been." *Id.* at 560-61.

That rationale, too, applies here. The objective-baselessness inquiry, just like the substantial-justification inquiry, requires appellate courts to have intimate familiarity with the entire progression of a case. And the nature of the two questions is identical: The court's task is "not just to determine whether there existed the usual minimum support for the merits determination made by the factfinder below, but to determine whether urging of the opposite merits determination was substantially justified." *Id.* at 560. *De novo* review in the Section 285 context therefore would require a substantial outlay of appellate resources regardless of whether there is an appeal of the merits. Conversely, reviewing exceptional-case findings for abuse of discretion "will streamline the litigation process by freeing appellate courts from the duty of reweighing evidence and reconsidering facts already weighed and considered by the district court." *Cooter*, 496 U.S. at 404.

Law-Clarifying Value. *Pierce* and *Cooter* also found it significant that the efficiency costs inherent in *de novo* review of fee awards and sanctions would fail to pay dividends in law-clarifying value. In both cases, the Court endorsed the general principle that "[o]ne of the 'good' reasons for conferring discretion on the trial judge is the sheer impracticability of formulating a rule of decision for the matter in issue." *Pierce*, 487 U.S. at 561 (internal quotation omitted); *see also Cooter*, 496 U.S. at 401. In *Pierce*, the Court concluded that "the question whether the

Government's litigating position has been 'substantially justified' is precisely such a multifarious and novel question, little susceptible, for the time being at least, of useful generalization." 487 U.S. at 562. It came to the same conclusion in *Cooter*, explaining that "[t]he issues involved in determining whether an attorney has violated Rule 11 likewise involve fact-intensive, close calls." 496 U.S. at 404 (internal quotation omitted).

Yet again, Section 285 findings are just the same. Each Section 285 case will involve different underlying facts. Each will turn on a different claim construction regarding a different patent. Each will require a different infringement analysis. And each will arise in a different litigation context. The question whether a case is exceptional, in short, "involve[s] multifarious, fleeting, special, narrow facts." *Pierce*, 487 U.S. at 561-62 (internal quotation omitted). And "because the number of possible situations is large, [the Court should be] reluctant either to fix or sanction narrow guidelines for the district courts to follow." *Id.* (internal quotation omitted). Effort expended in deciding an exceptional-case question *de novo* would be unlikely to produce a holding generalizable for future cases.

Distortion of Appellate Process. The temporal focus of the EAJA and Rule 11 inquiries created yet another problem with *de novo* review in *Pierce* and *Cooter*. Such plenary review would "strangely distort the appellate process." *Pierce*, 487 U.S. at 561; *Cooter*, 496 U.S. at 403-04. In practice, EAJA awards and Rule 11 sanctions typically turn on the reasonableness of a party's positions considered in their temporal and factual contexts. As a result, a holding that a party's position was or was not

reasonable at a given point in time may not accurately reflect the law as it is currently is. And where the state of the law remains unclear, a backwards-looking reasonableness holding would create confusing precedent for subsequent cases that squarely present the underlying question. *See Pierce*, 487 U.S. at 561; *Cooter*, 496 U.S. at 403-04.

De novo review of objective-baselessness findings would produce the same distortions. On the one hand, if intervening decisions have clarified the law, the question whether a position was baseless—at the time and in the context it was advanced—"is of entirely historical interest." *Pierce*, 487 U.S. at 561. On the other hand, if the law has yet to crystallize, an objective-baselessness ruling could "effectively establish the circuit law in a most peculiar, second-handed fashion." *Id.* *De novo* review would not promote orderly development of the law in either case.

Discouraging Collateral Appeals. Finally, *Cooter* pointed to a special reason to prefer deferential review for issues that arise in proceedings ancillary to the merits: "reducing the amount of satellite litigation" by "discourag[ing] litigants from pursuing marginal appeals." 496 U.S. at 404. This concern carries even greater weight in the context of attorney's fees. Appeals from fee awards are "one of the least socially productive types of litigation imaginable." *Hensley* v. *Eckerhart*, 461 U.S. 424, 442 (1983) (Brennan, J., concurring in part and dissenting in part). Reviewing fee-award decisions for abuse of discretion significantly reduces the incentives for fruitless appeals, while still protecting parties from serious error. *See Cooter*, 496 U.S. at 405 ("A district court would necessarily abuse its

discretion if it based its ruling on an erroneous view of the law or on a clearly erroneous assessment of the evidence.").

Moreover, even where collateral appeals are merited, abuse-of-discretion review simplifies them. Collateral litigation generally, and fee litigation specifically, "is often protracted, complicated, and exhausting." *Pennsylvania* v. *Del. Valley Citizens' Council*, 483 U.S. 711, 722 (1987). Such litigation, the Court has cautioned, "should be simplified to the maximum extent possible." *Id.* As *Pierce* recognized, reviewing fee awards under a unitary, deferential standard furthers the goal of ensuring "that 'a request for attorney's fees should not result in a second major litigation.'" 487 U.S. at 563 (quoting *Hensley*, 461 U.S. at 437). A unitary standard prevents needless litigation about which standard-of-review bucket a dispute belongs to. And a deferential standard ensures that appeals of fee awards focus on real errors, not minor quibbles. This is especially important in the fee context—a "sphere of judicial decisionmaking" in which this Court has cautioned against "appellate micromanagement." *Fox* v. *Vice*, 131 S. Ct. 2205, 2216 (2011).

3. *Pierce* and *Cooter*, in sum, hold that unitary, abuse-of-discretion review applies to determinations just like a Section 285 objective-baselessness finding. And the consideration that inspired the Federal Circuit here to undertake *de novo* review of objective-baselessness findings—namely, that some such findings may turn on legal issues—did nothing to change the result in *Pierce* and *Cooter*. Quite the contrary: *Pierce* explicitly recognized that "[i]n some cases, such as the present one, the attorney's fee determination will involve a judgment ultimately

based upon evaluation of the purely legal issue governing the litigation." 487 U.S. at 560. And the very question presented in *Cooter* was "whether the court of appeals must defer to the district court's *legal conclusions* in Rule 11 proceedings." 496 U.S. at 401 (emphasis added). The Court answered that question in the affirmative, adopting across-the-board abuse-of-discretion review.

In giving its answer, the Court recognized that appellate courts can reach and correct legal errors without the needless complications of a bifurcated (or trifurcated) review standard. As *Cooter* put it, unitary abuse-of-discretion review "would not preclude the appellate court's correction of a district court's legal errors" because "[a]n appellate court would be justified in concluding that, in making such errors, the district court abused its discretion." *Id.* at 402; *see also id.* at 405 (district court by definition abuses its discretion when it makes an error of law). Just so here. The objective-baselessness inquiry usually will involve factual questions, or legal questions bound up with factual ones. *See supra* at 17-19. But even if it sometimes does not, that is no warrant to review the district court's Section 285 finding *de novo*, any more than it was in *Pierce* or *Cooter*.

B. Deferential Review Here Follows *A Fortiori* From *Pierce* And *Cooter*.

The factors identified in *Pierce* and *Cooter* thus militate in favor of unitary abuse-of-discretion review in Section 285 cases. That actually understates the case, however. In fact, deferential review in this case follows *a fortiori* from *Pierce* and *Cooter* for two reasons.

1. First, Section 285's text is substantially *more* suggestive of unitary abuse-of-discretion review than the provisions in *Pierce* and *Cooter*.

a. Section 285 provides that "[t]he court in exceptional cases may award reasonable attorney fees to the prevailing party." 35 U.S.C. § 285. "Exceptional" means "[f]orming an exception," "not ordinary," "uncommon," or "rare"—in a word, unusual. Webster's New Int'l Dictionary 889 (2d ed. 1950); *see also Noxell Corp.* v. *Firehouse No. 1 Bar-B-Que Rest.*, 771 F.2d 521, 526 (D.C. Cir. 1985) (R.B. Ginsburg, J.) ("exceptional" means "uncommon, not run-of-the-mill"). And this Court has already held that a district court's decision that a case is unusual must be reviewed for abuse of discretion. *Koon* v. *United States*, 518 U.S. 81, 98-99 (1996). As the Court in *Koon* explained, "[t]o resolve th[e] question" whether a given case is "unusual enough for it to fall outside the heartland of cases * * * the district court must make a refined assessment of the many facts bearing on the outcome, informed by its vantage point and day-to-day experience." *Id.* at 98. Deferential review thus applies in order "to afford 'the district court the necessary flexibility to resolve questions involving multifarious, fleeting, special, narrow facts that utterly resist generalization.' " *Id.* at 99 (quoting *Cooter*, 496 U.S. at 404).

That makes sense. After all, a district court "may have a better 'feel' for the unique circumstances of the particular case before it," *United States* v. *Rivera*, 994 F.2d 942, 951-52 (1st Cir. 1993) (Breyer, C.J.), and " '[t]o ignore the district court's special competence * * * about the 'ordinariness' or 'unusualness' of a particular case' " would be to ignore " 'an important source of information, namely,

the reactions of the trial judge to the fact-specific circumstances of the case,'" *Koon*, 518 U.S. at 99 (quoting *Rivera*, 994 F.2d at 951). Appellate courts thus should defer to district courts' determinations as to "whether the given circumstances, as seen from the district court's unique vantage point, are usual or unusual, ordinary or not ordinary, and to what extent." *Rivera*, 994 F.2d at 951-52.[4]

The word "exceptional" in Section 285 also suggests a *unitary* standard of review—abuse of discretion across the board—to an even greater degree than the text at issue in *Pierce* and *Cooter*. In *Cooter*, this Court adopted a unitary standard despite the fact that Rule 11 itself broke out the possible grounds for sanction into multiple inquiries. *See* 496 U.S. at 399, 404-05. The case for a unitary standard here is much more straightforward. Section 285 asks only a "single question—'Is this case exceptional?'" Pet. App. 213a. Congress did not cleave exceptionality into rigid categories or announce various elements that must be present in an exceptional case. If a unitary standard was appropriate in *Cooter*, it is all the more appropriate for Section 285.

b. Section 285's history confirms that the word "exceptional" contemplates discretion and deferential review. The predecessor to Section 285, enacted in

---

[4] Indeed, the Second Circuit reached the same conclusion with respect to another statute that uses the word "exceptional." *See United States* v. *DiSomma*, 951 F.2d 494, 497 (2d Cir. 1991) (analyzing "exceptional reasons" language of 18 U.S.C. § 3145(c)). The court explained that "exceptional" means "a unique combination of circumstances giving rise to situations that are out of the ordinary," and that "a case by case evaluation" by district court judges in the "full exercise of [their] discretion" is "essential." *Id.*

1946, provided that a court, "in its discretion, may award attorney's fees." 35 U.S.C. § 70 (1946); Pub. L. No. 79-587, 60 Stat. 778 (1946). The legislative history of that provision demonstrates that Congress intended a holistic inquiry, with no limitation on the ways in which a case can warrant a fee award. *See* S. Rep. No. 79-1503, at 2 (1946) ("The provision is * * * made general so as to enable the court to prevent a gross injustice to an alleged infringer."). As one court put it after surveying the legislative history, the "exercise of discretion" to award fees "should be bottomed upon a finding of unfairness or bad faith in the conduct of the losing party, or some other equitable consideration of similar force, which makes it grossly unjust that the winner of the particular law suit be left to bear the burden of his own counsel fees[.]" *Park-In-Theatres, Inc.* v. *Perkins*, 190 F.2d 137, 142 (9th Cir. 1951). Applying the 1946 provision, every court of appeals to address fee-award decisions reviewed them deferentially. *See, e.g.*, *Dixie Cup Co.* v. *Paper Container Mfg. Co.*, 174 F.2d 834, 837 (7th Cir. 1949); *Dubil* v. *Rayford Camp & Co.*, 184 F.2d 899, 903 (9th Cir. 1950).

Congress then codified those interpretations in Section 285. The provision was enacted in 1952 as part of a massive revision and codification of the Patent Act. Pub. L. No. 82-593, § 285, 66 Stat. 792, 813 (1952). And the authoritative commentary on the new provision recognized that Section 285 "is substantially the same as the corresponding sentence of the old statute, with the addition of 'in exceptional cases' *to express the intention of the old statute as shown by its legislative history and as interpreted by the courts.*" P.J. Federico, *Commentary on the New Patent Act*, 35 U.S.C.A. 1, 56 (1954), *reprinted at* 75

J. Pat. & Trademark Off. Soc'y 161, 216 (1993) (emphasis added); *accord* S. Rep. No. 82-1979, at 30 (1952); *see also R.M. Palmer Co.* v. *Luden's Inc.*, 236 F.2d 496, 501 (3d Cir. 1956) ("The phrase 'exceptional circumstance' is not contained in the prior law, but confirms to the interpretation of the prior law by the cases." (internal citation omitted)). Congress, in short, intended "exceptional" to sweep in notions of discretion and deference.

c. By contrast, the EAJA provision at issue in *Pierce* asked the court to determine whether the United States' position was "substantially justified." 552 U.S. at 556 (quoting 28 U.S.C. § 2412(d)). And the portion of Rule 11 at issue in *Cooter* asked the court to determine, among other things, whether a litigant's argument was "warranted by existing law or a good faith argument for the extension, modification, or reversal of existing law." 496 U.S. at 392 (quoting Fed. R. Civ. P. 11). Nothing about those textual formulations particularly suggests deference. And yet the Court held that deferential review applied to both. If so there, all the more so here.

2. There is a second reason this is an *a fortiori* case: "[A] long history of appellate practice," *Pierce*, 487 U.S. at 558, teaches that review of Section 285 fee awards should be deferential.

a. The Court's analysis in *Pierce* centered on considerations of sound judicial administration. *See id.* at 560. But the Court delved into those considerations largely because the EAJA lacked a "historical tradition." *Id.* at 558. In areas of law that have such a tradition, the Court wrote, the answer to the standard-of-review question "is provided by a long history of appellate practice." *Id.*

This is such a case. As discussed, the predecessor to Section 285 authorized the district court to award fees "in its discretion," and every court of appeals to address fee awards under that statute applied deferential review. *See, e.g.*, *Dixie Cup*, 174 F.2d at 837; *Dubil*, 184 F.2d at 903; *see supra* at 26-27. After Congress enacted Section 285 in 1952, the courts of appeals uniformly recognized that the new statute "ha[d] not done away with the discretionary feature" and therefore that under Section 285, as before, "the determination of the district court will not be upset unless there has been an abuse of discretion." *Hoge Warren Zimmermann Co.* v. *Nourse & Co.*, 293 F.2d 779, 783-84 (6th Cir. 1961); *accord Talon, Inc.* v. *Union Slide Fastener, Inc.*, 266 F.2d 731, 738-39 (9th Cir. 1959); *Colgate-Palmolive Co.* v. *Carter Prods. Co.*, 230 F.2d 855, 866 (4th Cir. 1956).

Indeed, *every* court of appeals had the opportunity to weigh in on the standard of review for Section 285 cases before the Federal Circuit was created in 1982. And the outcome was *unanimous*: Deferential review was the unwavering rule. *See Norton Co.* v. *Carborundum Co.*, 530 F.2d 435, 445 (1st Cir. 1976); *Larchmont Eng'g, Inc.* v. *Toggenburg Ski Ctr.*, 444 F.2d 490, 491 (2d Cir. 1971); *Hardinge Co.* v. *Laughlin Steel Corp.*, 275 F.2d 37, 37-38 (3d Cir. 1960); *Colgate-Palmolive*, 230 F.2d at 866 (4th Cir.); *Graham* v. *Jeoffroy Mfg., Inc.*, 253 F.2d 72, 78 (5th Cir. 1958); *Hoge Warren*, 293 F.2d at 783-84 (6th Cir.); *Technograph Printed Circuits Ltd.* v. *Methode Elecs., Inc.*, 484 F.2d 905, 909 (7th Cir. 1973); *Bolt, Beranek, & Newman, Inc.* v. *McDonnell Douglas Corp.*, 521 F.2d 338, 344 (8th Cir. 1975); *Schmidt* v. *Zazzara*, 544 F.2d 412, 414 (9th Cir. 1976); *Milgo*

Elec. Corp. v. *United Bus. Comm'cns, Inc.*, 623 F.2d 645, 666-67 (10th Cir. 1980); *Oetiker* v. *Jurid Werke GmbH*, 671 F.2d 596, 602 (D.C. Cir. 1982). Nor did that deferential standard disappear after 1982; the Federal Circuit also applied it for decades. *See, e.g.*, *Medtronic Navigation, Inc.* v. *BrainLAB Medizinische Computersysteme GmbH*, 603 F.3d 943, 953 (Fed. Cir. 2010); *Slimfold Mfg. Co.* v. *Kinkead, Inc.*, 932 F.2d 1453, 1459 (Fed. Cir. 1991).

b. Appellate review under the Lanham Act's identical fee provision has a similar history. Congress added the provision in 1975, *see* Pub. L. No. 93-600, § 3, 88 Stat. 1955 (1975), and used the same language as in Section 285: "The court in exceptional cases may award reasonable attorney fees to the prevailing party." 15 U.S.C. § 1117(a)(3). Equipped with Section 285 precedents, every court of appeals but one decided to review Lanham Act fee awards for abuse of discretion. *See Tamko Roofing Prods., Inc.* v. *Ideal Roofing Co.*, 282 F.3d 23, 30 (1st Cir. 2002); *Farberware Licensing Co.* v. *Meyer Mktg. Co.*, 428 F. App'x 97, 99 (2d Cir. 2011); *Securacomm Consulting, Inc.* v. *Securacom Inc.*, 224 F.3d 273, 279 (3d Cir. 2000); *Employers Council on Flexible Comp.* v. *Feltman*, 384 F. App'x 201, 205-06 (4th Cir. 2010); *National Bus. Forms & Printing, Inc.* v. *Ford Motor Co.*, 671 F.3d 526, 537 (5th Cir. 2012); *Johnson* v. *Jones*, 149 F.3d 494, 503 (6th Cir. 1998); *TE-TA-MA Truth Found.-Family of URI, Inc.* v. *World Church of the Creator*, 392 F.3d 248, 257 (7th Cir. 2004); *Blue Dane Simmental Corp.* v. *Am. Simmental Ass'n*, 178 F.3d 1035, 1043 (8th Cir. 1999); *National Ass'n of Profl Baseball Leagues, Inc.* v. *Very Minor Leagues, Inc.*, 223 F.3d 1143, 1146 (10th Cir. 2000); *Tire Kingdom, Inc.* v. *Morgan Tire & Auto, Inc.*, 253 F.3d

1332, 1335-36 (11th Cir. 2001); *ALPO Petfoods, Inc.* v. *Ralston Purina Co.*, 913 F.2d 958, 971 (D.C. Cir. 1990). Only the Ninth Circuit is an outlier. *See Earthquake Sound Corp.* v. *Bumper Indus.*, 352 F.3d 1210, 1216 (9th Cir. 2003).[5]

A six-decade "history of appellate practice" thus confirms that exceptional-case findings are reviewed deferentially. *Pierce*, 487 U.S. at 558. That makes this case easier than *Pierce*. There was no warrant for the Federal Circuit's departure from 60 years of precedent.

C. Efforts To Distinguish *Pierce* And *Cooter* Are Unavailing.

Against the striking and conclusive parallels between this case and *Pierce* and *Cooter*, the court below pointed to only two distinctions: that the Federal Circuit has expertise in patent appeals, Pet. App. 189a-90a, and that Section 285 awards may well be larger on average than EAJA awards, Pet. App. 187a. Neither comes close to taking this case outside the Court's on-point precedents.

---

[5] The Ninth Circuit broke from the pack only because *Earthquake Sound* misread a prior circuit precedent, *Stephen W. Boney, Inc.* v. *Boney Services, Inc.*, 127 F.3d 821 (1997). *Boney* explained, correctly, that the appropriate legal standard for Lanham Act fee awards—for example, does it require bad faith?—is reviewed *de novo*. *Id.* at 825-26. But it also recognized that a "denial of a motion for attorney's fees under the Lanham Act should be reviewed for an abuse of discretion," and it ultimately reviewed the district court's finding for abuse of discretion. *Id.* at 825-27. *Earthquake Sound* misinterpreted that discussion and adopted *de novo* review of exceptional-case findings, effectively overruling *Boney* by accident.

1. The majority below theorized that because the Federal Circuit has more patent-law experience than district courts, there is less reason to defer in fee-award cases. Pet. App. 189a-90a. But that argument rests on an ahistorical view of congressional intent. Congress enacted Section 285 in 1952, thirty years before it created the Federal Circuit. It plainly did not intend to create a special role for a court that did not even exist yet. The Federal Circuit's contrary theory implies that the standard of review suddenly changed in 1982 when Congress created that court.

To the extent that expertise matters, *Pierce* and *Cooter* make clear that the *relevant* expertise is the kind *district* courts have: general expertise in the conduct of litigation, and specific expertise in the litigation at issue. *See Pierce*, 487 U.S. at 561; *Cooter*, 496 U.S. at 404. After all, objective baselessness is a mixed question, often bound up with facts and temporal issues, that requires a full assessment of the course of the litigation. *See supra* at 17-19. A district court is ideally suited to understand that full picture and compare the litigant's behavior, and the strength of his positions, to those of litigants in other cases. The court of appeals is not. The Federal Circuit's expertise in substantive patent law does little to help a panel compare one case to another when the two cases necessarily will involve different patents, different claim constructions, and different theories of infringement. Put another way, the very fact that fee-award determinations involve "multifarious, fleeting, special, narrow facts that utterly resist generalization," *Pierce*, 487 U.S. at 561, means the

district court's unique knowledge of the litigation at hand trumps the Federal Circuit's patent know-how.

Even if the Federal Circuit's patent expertise puts some marginal weight on the *de novo* side of the scale, it by no means outweighs all of the *Pierce* and *Cooter* factors on the other side. The Court has repeatedly rejected the proposition that patent cases should be subject to special rules. *See, e.g.*, *eBay, Inc.* v. *MercExchange, LLC*, 547 U.S. 388, 391 (2006) (noting that "familiar principles apply with equal force to disputes arising under the Patent Act"). The same should be true here.[6]

2. The size-of-the-award argument fares no better. True, *Pierce* noted that the small size of the average EAJA award cut in favor of a deferential standard. 487 U.S. at 563. But this consideration was not even mentioned in *Cooter*, and *Pierce* in no way suggests it is outcome-determinative. Nor should it be. If the

---

[6] In any event, a Federal Circuit panel will not always have significantly more patent expertise than the district court. A handful of district courts handle a disproportionate share of the nation's patent litigation. During a recent year, more than one-third of all patent suits were filed in just two districts, and more than half were filed in just five. *See* Judicial Business of the United States Courts, 2011 Report, Table C-7, *available at* http://www.uscourts.gov/uscourts/Statistics/JudicialBusiness/2011/appendices/C07Sep11.pdf. And patent cases increasingly are overseen by district judges who have chosen to specialize in the area. *See* An Act to Establish a Pilot Program in Certain United States District Courts to Encourage Enhancement of Expertise in Patent Cases Among District Judges, Pub. L. No. 111-349, 124 Stat. 3674 (2011). On the flip side, many Federal Circuit judges come to the bench without expertise in patents or a technical background. T. Holbrook, *Patents, Presumptions, and Public Notice*, 86 Ind. L.J. 779, 781-82 (2011).

best-situated decisionmaker is the district court, larger awards should militate *in favor* of deference, not against it. After all, if the stakes are high, that is all the more reason to defer to the decisionmaker most likely to reach the right outcome.

Anyway, if Section 285 awards are large, that is because too often patentees use the threat of drawn-out and massively expensive litigation to force unneeded licenses and lump-sum settlements from non-infringing parties. *See infra* at 44-47. Litigious patentees should not be permitted to ratchet up the costs of litigation and then claim that the size of Section 285 fee awards requires the court of appeals to increase its workload to protect them from reallocation of those very litigation costs.

D. Deferential Review Applies Under *Pierce* And *Cooter* No Matter What Merits Standard This Court Adopts In *Octane*.

The preceding discussion assumes the continued viability of the Federal Circuit's "objective baselessness" test under Section 285. This Court, however, has granted certiorari in *Octane Fitness LLC* v. *Icon Health & Fitness, Inc.*, No. 12-1184, to determine the appropriate test. Whatever the Court decides in *Octane*, it will not change the outcome here: Any other merits test the Court might adopt would only make it *more* apparent that deferential review applies.

1. Section 285 authorizes fee-shifting in "exceptional cases." 35 U.S.C. § 285. The Federal Circuit has since added its own gloss to that standard. It holds that a case can be deemed "exceptional" for various types of misconduct. *Brooks Furniture Mfg., Inc.* v. *Dutailier Int'l, Inc.*, 393 F.3d

1378, 1381 (Fed. Cir. 2005). Apart from misconduct, a case can be exceptional if it meets two requirements: It must be "objectively baseless"—that is, " 'so unreasonable that no reasonable litigant could believe it would succeed' "—and it must be brought in bad faith. *Old Reliable*, 635 F.3d at 544 (citation omitted).

The Federal Circuit held below that objective-baselessness findings are reviewed *de novo*, Pet. App. 9a, and Petitioner has explained why that is wrong. Accordingly, if this Court in *Octane* affirms the Federal Circuit's objective-baselessness subtest—or even adopts a test for exceptionality that turns *exclusively* on whether the litigant's position is objectively baseless—deferential review follows for the reasons already discussed.

2. If the Court instead jettisons objective baselessness and adopts an even more discretionary formulation for Section 285, then deferential review follows necessarily.

For example, the Court could hold in *Octane* that district courts are not constrained to apply a rigid multi-pronged test, but may instead consider a range of "nonexclusive factors" in determining whether fee-shifting is warranted. *Fogerty*, 510 U.S. at 534 n.19. Such an inquiry is arguably more consistent with Section 285's open-ended text, which contains no hint that Congress wanted to limit fee awards to vexatious claims. Indeed, had Congress intended fee-shifting to be so limited, "no new statutory provision would have been necessary," for courts have inherent power to assess fees against parties who put forward "groundless contentions" in bad faith. *Newman* v. *Piggie Park Enters., Inc.*, 390 U.S.

400, 402 n.4 (1968) (per curiam); *see also Noxell Corp.*, 771 F.2d at 526 (R.B. Ginsburg, J., joined by Scalia, J.) (Lanham Act's exceptional-case language should not be construed "rigidly" or limited "to the rare case in which a court finds that the plaintiff 'acted in bad faith, vexatiously, wantonly, or for oppressive reasons' " because fee-shifting is "always available" in such cases). An open-ended inquiry likewise would hew more closely to Section 285's "exceptional *cases*" verbiage than does the objective-baselessness test. The Federal Circuit applies the latter test on a "claim by claim" basis, Pet. App. 13a, which conflicts with the broad textual focus on "cases" and with Congress's preference for treating fee-shifting cases "as an inclusive whole, rather than as atomized line-items." *Commissioner, INS* v. *Jean*, 496 U.S. 154, 161-62 (1990).

If the Court adopts a more open-ended test in *Octane*, each factor considered in *Pierce* and *Cooter*—statutory text, best-positioned decision-maker, efficiency costs, law-clarifying value, distortion of the appellate process, simplification of collateral appeals—still would cut in favor of deferential review here; nothing about that analysis would change. On the flip side, the only consideration that led the Federal Circuit to institute *de novo* review in the first place—that Section 285 has a "threshold objective prong" that warrants its own, separate standard of review, Pet. App. 9a—would evaporate. District courts would be applying a single, unitary test, considering whether the case is exceptional in light of all the circumstances. It only makes sense that such a determination would be reviewed under a single, unitary, abuse-of-discretion standard. After all, any district-court determination

that takes into account all the events of a long litigation will by necessity involve "the consideration of unique factors that are 'little susceptible * * * of useful generalization.'" *Koon*, 518 U.S. at 99 (quoting *Cooter*, 496 U.S. at 404). And the fact that the analysis may sometimes involve legal questions "does not mean, as a consequence, that parts of the review must be labeled de novo while other parts are labeled an abuse of discretion." *Id.* at 100.

II. THIS CASE FITS NEATLY IN THE CATEGORY OF CASES IN WHICH THIS COURT HAS ENDORSED DEFERENTIAL REVIEW.

With such close analogues in *Pierce* and *Cooter* and clear guidance from statutory text and historical practice, the Court need look no further to resolve this case. The broader landscape of standard-of-review cases, though, only confirms that Section 285 exceptional-case findings fit squarely in the category of issues reviewed deferentially, and have little in common with the kinds of issues reviewed *de novo*.

1. This Court has described the circumstances in which "deferential review of mixed questions of law and fact is warranted," *Salve Regina College* v. *Russell*, 499 U.S. 225, 233 (1991), in terms that fit this case precisely. In *Salve Regina*, the Court explained that "it is 'especially common' for issues involving supervision of litigation to be reviewed for abuse of discretion." *Id.* (quoting *Pierce*, 487 U.S. at 558 n.1). Moreover, the Court added, "[w]e have held that deferential review of mixed questions of law and fact is warranted when it appears that the district court is 'better positioned' than the appellate court to decide the issue in question" and when "probing

appellate scrutiny will not contribute to the clarity of legal doctrine." *Id.* (quoting *Miller*, 474 U.S. at 114).

Pierce and *Cooter* are prime examples of such cases, but there are many more. In the fee-shifting context specifically, the Court has long reviewed all kinds of awards for abuse of discretion on the ground that "the district court's superior understanding of the litigation" militates in favor of "substantial deference." *Fox*, 131 S. Ct. at 2216 (internal quotation omitted). For instance, this Court deferentially reviews fee awards issued under the Civil Rights Attorney's Fees Awards Act, *see Hensley*, 461 U.S. at 437, and the Copyright Act, *cf. Fogerty*, 510 U.S. at 534, as well as fee awards based on the district courts' inherent authority, *see Chambers* v. *NASCO, Inc.*, 501 U.S. 32, 45-46, 55 (1991). The Court also affords deference to district courts' decisions to award (or deny) enhanced damages under the Patent Act. *See Topliff* v. *Topliff*, 145 U.S. 156, 174 (1892). And in the supervision-of-litigation context more generally, this Court deferentially reviews district courts' decisions on, among other things, discovery sanctions, *see National Hockey League* v. *Metro. Hockey Club, Inc.*, 427 U.S. 639, 642 (1976); *forum non conveniens* determinations, *see Piper Aircraft Co.* v. *Reyno*, 454 U.S. 235, 257 (1981), certifications for appeal, *see Curtiss-Wright Corp.* v. *Gen. Elec. Co.*, 446 U.S. 1, 8, 10-11 (1980), and the promulgation of local procedural rules, *see Frazier* v. *Heebe*, 482 U.S. 641, 645 (1987). *See generally* S. Childress & M. Davis, 1 *Federal Standards of Review* §§ 4.11-4.20 (4th ed. 2010). This case fits within the "supervision of litigation" category generally and the fee-award category specifically.

The Section 285 exceptional-case inquiry also shares important characteristics of other kinds of deferential-review cases. Deferential review, for example, extends to "reasonableness" determinations in negligence cases. *See Cooter*, 496 U.S. at 402 (noting that negligence findings are "generally reviewed deferentially" (citing, *inter alia*, *McAllister* v. *United States*, 348 U.S. 19, 20-22 (1954)). Objective baselessness requires a very similar analysis. Just like in classic negligence cases, the objective-baselessness inquiry turns on the "reasonablen[ess]" of a party's litigation behavior. *Old Reliable*, 635 F.3d at 544.

2. The cases endorsing a *de novo* standard of review, on the other hand, are cut from a wholly different cloth. Most involve unalloyed issues of law entirely divorced from the kinds of fact-based considerations involved in exceptional-case findings. *See, e.g.*, *First Options of Chicago, Inc.* v. *Kaplan*, 514 U.S. 938, 948 (1995). In *Salve Regina*, for instance, the Court held that a district court's determination of state law is subject to *de novo* review. 499 U.S. at 231. In so doing, it relied on the quintessentially legal nature of that inquiry and emphasized the special federalism considerations at stake. *See id.* at 231-34. In particular, the Court found that deferential review would be inconsistent with *Erie Railroad Co.* v. *Tompkins*, 304 U.S. 64 (1938), because it would "invite[ ] divergent development of state law among the federal trial courts even within a single State," and because it would "create a dual system of enforcement of state-created rights, in which the substantive rule applied to a dispute may depend on the choice of forum."

Salve Regina, 499 U.S. at 234. No such considerations are at work here.

The few *de novo* cases that involve mixed questions of law and fact also look very different from this case in at least three ways. They generally involve constitutional overtones. They are not ancillary to the merits in the same sense as fee litigation. And they do not pose the concerns about distortion of the appellate process and multiplicative litigation that helped drive *Pierce* and *Cooter* to endorse deferential review.

In *Ornelas* v. *United States*, for example, the Court held "as a general matter" that "determinations of reasonable suspicion and probable cause should be reviewed *de novo*." 517 U.S. 690, 699 (1996). This holding was based largely on the Fourth Amendment consequences of authorizing warrantless searches. *Id.* at 697-99. And it turned on the practicalities of law enforcement. *Id.* In particular, the Court thought it important to provide law-enforcement officers both with incentives to use the warrant process and with a uniform set of rules on which to rely. *See id.* Even then, *Ornelas* did not endorse *de novo* review, full stop. It emphasized instead that "a reviewing court should take care both to review findings of historical fact only for clear error and to give due weight to inferences drawn from those facts by resident judges and local law enforcement officers." *Id.* at 699; *see also id.* at 704 (Scalia, J., dissenting) (pointing out that the majority's standard left room for deference to district courts).

In *Cooper Industries, Inc.* v. *Leatherman Tool Group, Inc.*, the Court similarly held that the

"constitutionality of [a] punitive damages" award should be reviewed *de novo*. 532 U.S. 424, 431 (2001). Like *Ornelas*, *Cooper* involved an important constitutional question and issues of fair notice. *See id.* at 434-37; *see also Bose Corp.* v. *Consumers Union of U.S., Inc.*, 466 U.S. 485, 503-11 (1984) (independent fact review in First Amendment cases "reflects a deeply held conviction that judges * * * must exercise such review in order to preserve the precious liberties established and ordained by the Constitution"). Accordingly, the Court found that "[c]onsiderations of institutional competence * * * fail[ed] to tip the balance in favor of deferential review." *Cooper*, 532 U.S. at 440.

In both of these cases, the concerns animating *Pierce* and *Cooter* are largely absent. They do not implicate the kind of fact-intensive, "supervision of litigation" issues which district courts are best positioned to decide. They do not have the same potential to distort the appellate process because the appellate court can make law in the usual manner, without referring back to the state of doctrine at a time past. And to the extent *de novo* review reduces efficiency in the reasonable-suspicion and punitive-damages contexts, that sacrifice is justified by constitutional considerations that are inapplicable here. *See Cooper*, 532 U.S. at 433-34; *Ornelas*, 517 U.S. 697-99. Nor is this a criminal case, in which *de novo* review might "prevent a miscarriage of justice that might result from permitting the verdict of guilty to rest upon the legal determinations of a single judge." *Id.* at 705 (Scalia, J., dissenting).

3. While cases like *Salve Regina*, *Ornelas*, and *Cooper* are readily distinguishable, they are at least relevant to the standard-of-review issue. That is

more than can be said for the primary case on which the Federal Circuit based its decision to endorse a *de novo* standard: *Professional Real Estate Investors, Inc.* v. *Columbia Pictures Industries, Inc.*, 508 U.S. 49 (1993) (*PRE*).

In *PRE*, the Court addressed the so-called "sham exception" to the *Noerr-Pennington* doctrine, which provides that private entities are immune from antitrust liability for attempts to influence the enactment of laws. At issue was the proper test for determining whether litigation qualifies as sham litigation, and the Court adopted a substantive standard similar to the Federal Circuit's objective-baselessness test. To qualify as sham, the Court held that litigation must be both "objectively baseless"—that is, there must be an absence of "probable cause"—and brought in subjective bad faith. *See id.* at 60-62.

The opinion contains just one line that appears to concern the standard of review: "Where, as here, there is no dispute over the predicate facts of the underlying legal proceeding, a court may decide probable cause as a matter of law." *Id.* at 63. To be sure, standing alone, that sentence may seem relevant. But context makes clear that the Court's statement was not about standards of review at all; it was about whether a judge—as opposed to a jury—can make a probable-cause finding for purposes of the sham exception. *See id.* (citing four cases, all holding that when facts are undisputed judges may decide probable cause rather than submit the issue to the jury). Indeed, *PRE* does not even cite standard-of-review cases such as *Pierce* or *Cooter*, let alone purport to overrule or try to distinguish them.

Apart from its failure to address the relevant issue, *PRE* contains an explicit caveat that squarely distinguishes this case: "*Where, as here, there is no dispute over the predicate facts of the underlying legal proceeding*, a court may decide probable cause as a matter of law." *PRE*, 508 U.S. at 63 (emphasis added). This case presents a marked contrast. Whereas the facts in *PRE* were essentially stipulated, *see id.* at 54 (noting that PRE did not even "challenge the district court's finding that * * * the suit was not baseless" (internal quotation and alteration omitted)), Highmark and Allcare disagree as to nearly all of the relevant facts—including, for example, the characteristics of Highmark's system, the adequacy of Allcare's pre-filing investigation, and the background of the patent. Pet. App. 51a-86a.

PRE is inapposite for yet a third reason: Like *Ornelas* and *Cooper*, it has constitutional undertones. *PRE* addressed the scope of antitrust liability for filing lawsuits in light of the First Amendment right to petition courts for redress. *See* 508 U.S. at 56. But the right-to-petition line of cases has nothing to do with statutory provisions, like Section 285, that "merely authorize the imposition of attorney's fees on a losing plaintiff." *BE&K Constr. Co.* v. *NLRB*, 536 U.S. 516, 537 (2002). Such provisions do not raise constitutional concerns at all. *See Premier Elec. Const. Co.* v. *Nat'l Elec. Contractors Ass'n, Inc.*, 814 F.2d 358, 373 (7th Cir. 1987) (Easterbrook, J.) (the proposition that the Constitution "prohibits or even has anything to say about fee-shifting statutes in litigation seems too farfetched to require extended analysis"); *cf. Bill Johnson's Rests., Inc.* v. *NLRB*, 461 U.S. 731, 743 (1983) ("baseless litigation is not immunized by the

First Amendment right to petition"). And even if Section 285 did somehow implicate the First Amendment, so would Rule 11. Yet *Cooter* still found that deference was due.

III. THE DECISION BELOW EXACERBATES ABUSIVE PATENT LITIGATION'S DRAG ON INNOVATION AND ECONOMIC GROWTH.

Finally, there are weighty policy reasons to reject the Federal Circuit's *de novo* standard of review. The standard emboldens patent trolls (and others) to file, and drag out, baseless litigation. And it exacerbates the economic losses caused by such litigation. These effects undermine core policies embodied in the Patent Act.

1. This Court recognized more than 40 years ago "that patent litigation is a very costly process." *Blonder-Tongue Labs., Inc.* v. *Univ. of Ill. Found.*, 402 U.S. 313, 334, 336 (1971). When the Court made that observation, the average cost of defending a patent suit was "about $50,000." *Id.* at 335. The situation is far worse today: The average cost of defending a patent suit with less than $1 million at stake is $700,000; the average cost of defending a patent suit with $1 to $10 million at stake is $2 million; and the average cost of defending a patent suit with more than $25 million at stake is $5.5 million. Am. Intellectual Property Law Ass'n, *Report of the Economic Survey 2013* at 34.

More than half of these costs are incurred during discovery, before summary judgment can weed out meritless claims. *See id.* (cost through end of discovery is $350,000 for suits with $1 million at stake; $1 million for suits with $1 to $10 million at stake; and $3 million for suits with more than $25

million at stake). Yet patent trolls structure their businesses to avoid these exorbitant costs. Unlike most other patent litigants, trolls pursuing infringement suits "do not risk disruption to their core business" because "patent enforcement is their core business." C. Chien, *Of Trolls, Davids, Goliaths, and Kings: Narratives and Evidence in the Litigation of High-Tech Patents*, 87 N.C. L. Rev. 1571, 1579 (2009). Patent trolls have few documents to produce in discovery because they manufacture no products and hire few employees. *See* J. Bessen & M. Meurer, *The Direct Costs from NPE Disputes* 29 (forthcoming 99 Cornell L. Rev. 2014).[7] They do not fear counterclaims for infringement because they do not practice their patents. *See id.* And they shift their only risk of litigation—their attorney's fees—onto their attorneys through widespread use of contingency fee arrangements. *See* D. Schwartz, *The Rise of Contingent Fee Representation in Patent Litigation*, 64 Ala. L. Rev. 335, 370 (2012). As a result, "patent trolls have nothing to lose and much to gain by litigating aggressively." B. Yeh, Cong. Research Serv., R42668, *An Overview of the "Patent Trolls" Debate* 13 (2012).

The businesses sued by trolls, by contrast, cannot avoid massive litigation costs in defending frivolous infringement claims. Trolls therefore regularly demand hold-up settlements from innocent defendants, at amounts carefully calibrated below the cost of defending against even a meritless infringement suit. They often "propose settlement amounts * * * in the range of $100,000 or $250,000"—a substantial (and sometimes crippling)

---

[7] *Available at* http://papers.ssrn.com/sol3/papers.cfm?abstract_id=2091210.

sum for a business that has done nothing wrong, but far lower than the millions "it will cost an accused infringer to defend itself." Schwartz, *supra*, at 370. Recognizing that the economically rational approach is to settle, many businesses are forced to do so without the troll even having to file suit. Because of this economic reality, "[a]n industry has developed in which firms use patents not as a basis for producing and selling goods but, instead, primarily for obtaining licensing fees." *eBay*, 547 U.S. at 396 (Kennedy, J., concurring).

That industry is booming. Trolls extort settlements from an astonishing number of businesses; one estimate pegs the number of threatened suits by trolls at 50 times the number of actual suits. C. Chien, *Patent Assertion Entities: Presentation to the DOJ/FTC Hearing on PAEs* (Dec. 10, 2012). And while they often manage to obtain pre-litigation settlements, troll-driven litigation has exploded too. In 2012, suits by patent trolls accounted for 62 percent of all infringement suits. C. Chien, *Patent Trolls by the Numbers*, Patently-O, Mar. 14, 2013.[8] Suits by trolls fail on the merits the vast majority of the time; patent trolls win only 8 percent of their suits litigated to judgment.

---

[8] *Available at* http://www.patentlyo.com/patent/2013/03/chien-patent-trolls.html. Some commentators attribute the increase in the raw number of suits by trolls in part to changes in joinder rules by the America Invents Act, which limits the number of unrelated defendants who can be named in an infringement suit. *See* C. Cotropia *et al.*, *Patent Assertion Entities (PAEs) Under the Microscope* 4 (Illinois Public Law and Legal Theory Research Paper No. 14-17, 2013) (citing 35 U.S.C. § 299), *available at* http://papers.ssrn.com/sol3/papers.cfm?abstract_id=2346381.

J. Allison *et al.*, *Patent Quality and Settlement Among Repeat Patent Litigants*, 99 Geo. L.J. 677, 693-94 (2011). But that has not stopped them. In 2012, 5,189 patent cases were filed—29 percent more than in 2011 and the highest number ever recorded. Judicial Business of the United States Courts, *2012 Annual Report of the Director* Table C-7.[9]

The costs to the nation from this activity are enormous. A recent study estimates firms incurred $29 billion in direct costs to defend against trolls in 2011, a more than 400 percent increase from 2005. *See* Bessen & Meurer, *supra*, at 42, 48. But the total wealth lost by firms facing these suits—not just direct costs, but also lost opportunities, inability to conduct research and development, business failure, and more—is far higher. One study put the aggregate loss of wealth to firms between 1990 and 2010 at over half a *trillion* dollars. J. Bessen *et al.*, *The Private and Social Costs of Patent Trolls* 4 (Boston Univ. Sch. of Law Working Paper No. 11-45, 2011).[10] From 2007 through October 2010, the lost wealth soared to over $83 billion per year—an amount exceeding one-quarter of annual U.S. industrial research and development spending. *Id.* at 16-17. Because the bulk of these costs are not offset by transfers to trolls or independent inventors, they represent deadweight loss—lost wealth the nation can never recover. *Id.* at 19.

These massive disincentives to American business undercut the *raison d'etre* of patent law. The

---

[9] *Available at* http://www.uscourts.gov/uscourts/Statistics/JudicialBusiness/2012/appendices/C07Sep12.pdf.

[10] *Available at* http://papers.ssrn.com/sol3/papers.cfm?abstract_id=1930272.

Constitution grants Congress patent authority "[t]o promote the Progress of * * * useful Arts," U.S. Const., Art. I, § 8, cl. 8, and Congress enacted the Patent Act "as a means of encouraging innovation." *Bilski* v. *Kappos*, 130 S. Ct. 3218, 3236 (2010). That is not what is happening on the ground. Firms must now "factor in the likelihood that [a troll] will later emerge and demand royalties or bring costly litigation, directly reducing returns on investment." Yeh, *supra*, at 7. Accordingly, "manufacturers may find that some R&D projects, features, and product improvements are simply not worth doing, even if beneficial to consumers." *Id.* Startups and other small companies, a favorite target of patent trolls, are at particular risk. Because they are "uniquely vulnerable," such companies report outsized negative impacts on hiring, innovation, and operations caused by patent trolls' demands. C. Chien, *Startups and Patent Trolls* 10-13 (Santa Clara Univ. Sch. of Law Legal Studies Research Paper No. 09-12, Sept. 2012).

2. Correctly calibrating the standard of review for Section 285 fee awards certainly cannot eliminate all these harms. But it can make a real difference at the margins. That is so because the Federal Circuit's *de novo* standard of review exacerbates the asymmetry of incentives that inspires trolls to bring suit and innocent defendants to settle.

As discussed above, patent trolls lack any major disincentive to litigate. The possibility of being saddled with the defendant's attorney's fees thus is often the sole consideration dissuading a troll from pursuing a meritless suit. And the Federal Circuit's *de novo* standard reduces the chance of such a fee award because, as a practical matter, it operates as a one-way ratchet: If the district court declines to

impose fees, that decision will almost never be reversed because the party seeking fees would have to prove a negative—that there are no colorable legal arguments at all that could have supported the trolls' claims. By contrast, if the district court imposed a fee award, the troll's attorneys could undo it under the Federal Circuit's approach by simply dreaming up some colorable legal argument that *could* have been, but was not, advanced below. It will be all too easy for the Federal Circuit to throw out fee awards, while the odds that it would *impose* a fee award denied below would be vanishingly small.

That is not just supposition. It is what happened in this very case: The Federal Circuit reversed the district court's objective-baselessness finding as to claim 52 only after concocting an argument never advanced by Allcare in the district court or on appeal. *See* Pet. App. 21a. And the run of cases since *Highmark* was decided below likewise suggest that the *de novo* standard favors trolls. In that brief time, the Federal Circuit has reviewed a district court's determination that a claim was objectively baseless three times, and in two of the three cases it has reversed that determination and vacated the fee award. *See Taurus IP, LLC* v. *DaimlerChrysler Corp.*, 726 F.3d 1306 (2013) (affirming); *Precision Links Inc.* v. *USA Prods. Grp., Inc.*, 527 F. App'x 852 (2013) (reversing); *Checkpoint Sys., Inc.* v. *All-Tag Sec. S.A.*, 711 F.3d 1341 (2013) (reversing). In both of those cases the Federal Circuit concluded, as here, that a litigant's meritless position had some theoretical support and thus was not "objectively baseless." *Precision Links*, 527 F. App'x at 855; *Checkpoint Sys.*, 711 F.3d at 1347-48. In that same span of time, the Federal Circuit has not once

reversed a district court's *denial* of fees and decided for itself that litigation was objectively baseless.

3. Patent trolls are not the only parties dragging out baseless litigation to exhaust their opponents' resources. Accused infringers—often large corporations—likewise use such abusive tactics to harass their smaller competitors. In particular, many "corporations see start-ups as easy fodder for a 'scorched-earth' strategy of stealing their patents and fighting an infringement suit in the hope of exhausting a plaintiff's funds." G. Magliocca, *Blackberries and Barnyards: Patent Trolls and the Perils of Innovation*, 82 Notre Dame L. Rev. 1809, 1818 (2007).

Section 285 accordingly stands as a bulwark against abusive litigation, by patentees and accused infringers alike. The Federal Circuit's standard of review, however, will "tie the trial court's hand," Pet. App. 213a, substantially weakening Section 285's deterrent effects. That court's *de novo* standard is not just bad law; it also makes for bad policy that undermines the very goals of America's patent system.

CONCLUSION

For the foregoing reasons, the Federal Circuit's judgment should be reversed.

Respectfully submitted,

CYNTHIA E. KERNICK
JAMES C. MARTIN
THOMAS M. POHL
REED SMITH LLP
225 Fifth Avenue
Pittsburgh, PA 15222
(412) 288-3131

*Not admitted in DC; supervised by members of the firm

NEAL KUMAR KATYAL
Counsel of Record
DOMINIC F. PERELLA
DAVID M. GINN
R. CRAIG KITCHEN*
AMANDA K. RICE*
JONATHAN D. SHAUB*
HOGAN LOVELLS US LLP
555 13th Street, NW
Washington, DC 20004
(202) 637-5600
neal.katyal@hoganlovells.com

DECEMBER 2013

RESPONDENT'S BRIEF

No. 12-1163

IN THE

Supreme Court of the United States

HIGHMARK INC.,

Petitioner,

v.

ALLCARE HEALTH MANAGEMENT SYSTEM, INC.,

Respondent.

On Writ of Certiorari to the United States Court of Appeals for the Federal Circuit

BRIEF FOR RESPONDENT

ERIK R. PUKNYS
FINNEGAN, HENDERSON, FARABOW, GARRETT & DUNNER, LLP
3300 Hillview Avenue
Palo Alto, CA 94304
(650) 849-6676

DONALD R. DUNNER
Counsel of Record
DON O. BURLEY
JASON W. MELVIN
CORA R. HOLT
FINNEGAN, HENDERSON, FARABOW, GARRETT & DUNNER, LLP
901 New York Avenue, NW
Washington, DC 20001-4413
(202) 408-4000
don.dunner@finnegan.com

RULE 29.6 STATEMENT

Respondent Allcare Health Management System, Inc., has no parent company, and no publicly held corporation owns 10 percent or more of its stock.

TABLE OF CONTENTS

Page

RULE 29.6 STATEMENT i

TABLE OF AUTHORITIES v

INTRODUCTION 1

STATEMENT 5

SUMMARY OF ARGUMENT 18

ARGUMENT 23

A. Objective reasonableness under Section 285 is an issue of law that is reviewed de novo. 23

1. This Court's decisions establish that objective reasonableness is an issue of law 23

3. Determinations of objective reasonableness under Section 285 should be reviewed de novo on appeal 28

B. *Pierce* and *Cooter* both support the conclusion that objective reasonableness should be reviewed de novo in the context of Section 285. 36

1. The general rule, expressly recognized in *Pierce*, is that district courts' legal determinations are reviewed de novo on appeal.....37

2. The contexts of *Pierce* and *Cooter* led this Court to find that deferential review was appropriate in those cases.....37

3. The policy considerations recognized in *Pierce* and *Cooter* strongly counsel for de novo review of the legal aspects of Section 285 determinations.....42

C. The constitutional right of access to the courts weighs in favor of de novo review.....45

D. Highmark's assertion that the decision below conflicts with other appellate decisions concerning Section 285 and the Lanham Act ignores the narrow issue presented here.....48

E. Historically, courts have treated reasonableness in negligence cases differently than in other contexts.....52

F. The district court's ancillary exceptional-case findings cannot support Highmark.....53

G. The United States' amicus brief provides no reason to depart from de novo review.....55

H. The outcome of the *Octane* case will not change the result here. 59

I. Highmark cannot demonstrate any connection between the standard of review and the amount of baseless patent litigation. 62

CONCLUSION 67

TABLE OF AUTHORITIES

CASES

Absolute Software, Inc. v. Stealth Signal, Inc.,
659 F.3d 1121 (Fed. Cir. 2011) 44

Andrx Pharm., Inc. v. Elan Corp.,
421 F.3d 1227 (11th Cir. 2005) 33

Arbrook, Inc. v. Am. Hosp. Supply Corp.,
645 F.2d 273 (5th Cir. 1981) 50

Associated Plastics Cos. v. Gits Molding Corp.,
182 F.2d 1000 (7th Cir. 1950) 39

Atl. Fish Spotters Ass'n v. Daley,
205 F.3d 488 (1st Cir. 2000) 49

BE&K Construction Co. v. NLRB,
536 U.S. 516 (2002) 46

Bill Johnson's Restaurants, Inc. v. NLRB,
461 U.S. 731 (1983) 47

Boag v. MacDougall,
454 U.S. 364 (1982) (per curiam) 56, 57

Bose Corp. v. Consumers Union of United States, Inc.,
466 U.S. 485 (1984) 46

Brooks Furniture Manufacturing, Inc. v. Dutailier International, Inc.,
393 F.3d 1378 (Fed. Cir. 2005) 14, 15

Cal. Motor Transp. Co. v. Trucking Unlimited,
404 U.S. 508 (1972) 45

Chambers v. NASCO, Inc.,
501 U.S. 32 (1991) 55, 58, 59

Christiansburg Garment Co. v. EEOC,
434 U.S. 412 (1978) 55, 57, 58

CJC Holdings, Inc. v. Wright & Lato, Inc.,
989 F.2d 791 (5th Cir. 1993) 54

Colortronic Reinhard & Co. v. Plastic Controls, Inc.,
668 F.2d 1 (1st Cir. 1981) 50

Computer Docking Station Corp. v. Dell, Inc.,
519 F.3d 1366 (Fed. Cir. 2008) 51

Cooter & Gell v. Hartmarx Corp.,
496 U.S. 384 (1990) ..... passim

Covad Commc'ns Co. v. Bell Atl. Corp.,
398 F.3d 666 (D.C. Cir. 2005) 26, 34

Denton v. Hernandez,
504 U.S. 25 (1992) 55, 56

DePuy Spine, Inc. v. Medtronic Sofamor Danek, Inc.,
567 F.3d 1314 (Fed. Cir. 2009) 49, 50

Dubil v. Rayford Camp & Co.,
184 F.2d 899 (9th Cir. 1950) 39

Farberware Licensing Co. v. Meyer Mktg. Co.,
428 F. App'x 97 (2d Cir. 2011) 49

FDIC v. Maxxam, Inc.,
523 F.3d 566 (5th Cir. 2008) 54

FilmTec Corp. v. Hydranautics,
67 F.3d 931 (Fed. Cir. 1995) 26, 33

Harkrader v. Moore,
44 Cal. 144 (Cal. 1872) 25

ICU Med., Inc. v. Alaris Med. Sys., Inc.,
558 F.3d 1368 (Fed. Cir. 2009) 51

Illinois v. Gates,
462 U.S. 213 (1983) 30

iLOR, LLC v. Google, Inc.,
631 F.3d 1372 (Fed. Cir. 2011) 15, 48, 50

Jacobellis v. Ohio,
378 U.S. 184 (1964) 45

Johnstone v. Sutton,
99 Eng. Rep. 1225 (Ex. 1786) 25, 26

Kilopass Tech., Inc. v. Sidense Corp.,
No. 2013-1193, 2013 WL 6800885
(Fed. Cir. Dec. 26, 2013) 47, 65, 66

Koon v. United States,
518 U.S. 81 (1996) 15, 37

Markman v. Westview Instruments,
517 U.S. 370 (1996) 16, 29, 43

Medtronic Navigation, Inc. v. BrainLAB Medizinische Computersysteme GmbH,
603 F.3d 943 (Fed. Cir. 2010) 51

Miller v. Fenton,
474 U.S. 104 (1985) 30

Mitchell v. Forsyth,
472 U.S. 511 (1985) 23

Molton Realty Co. v. Murchison,
212 Ala. 561 (1925) 25

Nat'l Ass'n of Prof'l Baseball Leagues v. Very Minor Leagues, Inc.,
223 F.3d 1143 (10th Cir. 2000) 49

New York v. Belton,
453 U.S. 454 (1981) 32

Old Reliable Wholesale, Inc. v. Cornell Corp.,
635 F.3d 539 (Fed. Cir. 2011) 50

Ornelas v. United States,
517 U.S. 690 (1996) 28, 29, 30, 32

Park-In-Theatres, Inc. v. Perkins,
190 F.2d 137 (9th Cir. 1951) 40

Phillips v. AWH Corp.,
415 F.3d 1303 (Fed. Cir. 2005) 17

Pierce v. Underwood,
487 U.S. 552 (1988) ..... passim

Pitt v. District of Columbia,
491 F.3d 494 (D.C. Cir. 2007) 34

Precision Links Inc. v. USA Prods. Grp., Inc.,
527 F. App'x 852 (Fed. Cir. 2013) 66

Premier Elec. Constr. Co. v. Nat'l Elec. Contractors Ass'n,
814 F.2d 358 (7th Cir. 1987) 46, 47

Prof'l Real Estate Investors, Inc. v. Columbia Pictures Indus., Inc.,
508 U.S. 49 (1993) ..... passim

R.R. Co. v. Stout,
84 U.S. 657 (1873) 52

Raylon, LLC v. Complus Data Innovations, Inc.,
700 F.3d 1361 (Fed. Cir. 2012) 66

Salve Regina Coll. v. Russell,
499 U.S. 225 (1991) 33

Scott v. Harris,
550 U.S. 372 (2007) 24

Stephen W. Boney, Inc. v. Boney Servs., Inc.,
127 F.3d 821 (9th Cir. 1997) 49

Thompson v. Keohane,
516 U.S. 99 (1995) 33, 35

United States v. Bajakajian,
524 U.S. 321 (1998) 35

United States v. Garzon,
119 F.3d 1446 (10th Cir. 1997) 34

United States v. Legros,
529 F.3d 470 (2d Cir. 2008) 37

United States v. Nerber,
222 F.3d 597 (9th Cir. 2000) 34

Warner-Jenkinson Co. v. Hilton Davis Chem. Co.,
520 U.S. 17 (1997) 31

Wilson v. Seng Co.,
194 F.2d 399 (7th Cir. 1952) 40

STATUTES

35 U.S.C. § 70 (1946) 39

35 U.S.C. § 285 ..... passim

LEGISLATIVE HISTORY

H. R. Rep. No. 97-312 (1981) 29

S. Rep. No. 79-1503 (1946) 64

S. Rep. No. 82-1979 (1952) 39

OTHER AUTHORITIES

Christopher Cotropia et al., *Patent Assertion Entities (PAEs) Under the Microscope* (Illinois Public Law and Legal Theory Research Paper No. 14-17, 2013), *available at* http://papers.ssrn.com/sol3/papers.cfm?abstract_id=2346381 63

GAO Report to Congress, Intellectual Property: Assessing Factors That Affect Patent Infringement Litigation Could Help Improve Patent Quality, Introduction (Aug. 2013)..... 63

Kimberly A. Moore, *Forum Shopping in Patent Cases*, 79 N.C. L. Rev. 889 (2001) 30

LegalMetric District Report California Northern District Court in Patent Cases (Jan. 1991-May 2013)..... 29

LegalMetric Nationwide Patent Litigation Report, Contested Win Rates (May 2012) 29

Patstats: U.S. Patent Litigation Statistics, University of Houston Law Center (Jeffrey Johnson, ed.), http://patstats.org/Patstats3.html..... 64

Randall Rader, Colleen Chien & David Hricik, *Make Patent Trolls Pay in Court*, N.Y. Times, June 4, 2013..... 4

Richard A. Posner, *Why There Are Too Many Patents in America*, The Atlantic (July 12, 2012), http://www.theatlantic.com/business/archive/2012/07/why-there-are-too-many-patents-in-america/259725/ 30

IN THE

Supreme Court of the United States

No. 12-1163

HIGHMARK INC.,

Petitioner,

v.

ALLCARE HEALTH MANAGEMENT SYSTEM, INC.,

Respondent.

ON WRIT OF CERTIORARI TO THE UNITED STATES COURT OF APPEALS FOR THE FEDERAL CIRCUIT

BRIEF FOR RESPONDENT

INTRODUCTION

The issue in this case is a narrow one: how should an appellate court review a district court's decision whether to award fees under Section 285 when that decision turned on the determination of whether a *legal* position taken by the losing party was objectively baseless.

Objective baselessness (along with its counterpart, objective reasonableness) is derived from the centuries-old concept of probable cause: a party with an objectively reasonable position has probable cause to sue in court. Historically, the question of whether probable cause exists has been treated as a *legal* issue. And while underlying factual findings (if there are any) are reviewed on appeal with deference, the ultimate probable-cause determination is reviewed de novo. This Court has consistently followed this rule in many contexts, and it should confirm that the rule applies to Section 285 cases as well.

Perhaps because common-law tradition and this Court's precedents are so one-sided on the issue, very little of Highmark's brief addresses the specific issue of objective baselessness that is at the heart of the question presented. Instead, Highmark devotes much of its brief to arguing that a district court's *award of fees* must be reviewed for abuse of discretion. *See, e.g.*, Br. 24, 29.

By framing its arguments in this way, however, Highmark fights on uncontested ground. No one—not Allcare and not the majority below—disputes this. *See, e.g.*, P.A. 183a (Dyk, J., concurring in the denial of rehearing en banc) ("We all agree that the ultimate decision to award enhanced damages and attorneys' fees (once the predicate tests have been satisfied) is committed to the district court's discretion . . . .").

But discretion does not mean that *all* aspects of the fee-award determination are reviewed the same way on appeal. A district court's factual findings are reviewed for clear error, but this Court has stated repeatedly that questions of law are reviewed de novo. This is true even where legal questions are resolved as part of a larger determination that is left to the district court's discretion. Indeed, one of the two cases on which Highmark relies so heavily—*Cooter & Gell v. Hartmarx Corp.*, 496 U.S. 384 (1990)—explicitly states that even though district courts' decisions concerning Rule 11 sanctions should be reviewed with deference, *legal* determinations made in the course of those decisions should be reviewed de novo.

The other case on which Highmark principally relies—*Pierce v. Underwood*, 487 U.S. 552 (1988)—provides some guideposts for determining how to review issues on appeal that have neither a statutory standard nor an historical tradition. Here, of course, objective baselessness has historically been reviewed de novo, so *Pierce* supports the decision below. But more importantly, the policy considerations discussed in *Pierce* (e.g., Section 285's history and language, the Federal Circuit's superior expertise in the issues involved, Congress's expressed desire for national uniformity on patent matters, and the size of the typical award) also support de novo review of objective-baselessness determinations in the Section 285 context.

Like Highmark, most of its supporting amici virtually ignore the specific issue before the Court. Instead, many of them have filed briefs that cathartically—but irrelevantly—condemn a "troll"[1] problem that they claim is plaguing the courts. Highmark and its amici insist, without any logical support or research, that a more deferential standard of review for Section 285 awards will somehow alleviate this problem by making it easier to sanction trolls.

But the standard of review has nothing to do with whether a party's position was objectively baseless, so these assertions can be true only if the Federal Circuit treats patent owners more favorably than district courts do. But that is clearly not the case. To the contrary, Federal Circuit Chief Judge Randall Rader has urged district courts to use Section 285 more vigilantly, especially in instances of baseless troll litigation. *See* Randall Rader, Colleen Chien & David Hricik, *Make Patent Trolls Pay in Court*, N.Y. Times, June 4, 2013. In reality, the Federal Circuit has demonstrated that the standard of review cuts both ways, and where a plaintiff's position was "objectively baseless," the Federal Circuit will reverse a district court that concluded otherwise. Indeed, in *this* case, the Federal Circuit affirmed the district court's award of sanctions as to a portion of Allcare's conduct.

---

[1] "Troll" is a pejorative name for aggressive nonpracticing entities ("NPEs").

In asking for a more deferential review, the amici who support Highmark argue that the Federal Circuit's approach to Section 285 cases favors patentees. But the statistics belie the argument that accused infringers are forced to pay their opponents' fees more often than are patent owners. And even if the district courts were biased against defendants, as many amici allege, making review of Section 285 decisions more difficult would only exacerbate the problem. The solution is to reduce the overall number of bad decisions, and the key to that is to ensure that the patent laws are interpreted both correctly and consistently, which can be accomplished only through de novo review.

STATEMENT

1. Allcare is the owner of U.S. Patent No. 5,301,105 ("the '105 patent"). The '105 patent is directed to "managed health care systems" used by managed-care organizations (insurance companies) to interact with health-care providers (physicians or hospitals). S.A. 11[1:4]. Managed-care organizations contract with providers that their members/patients are eligible to see, and administer complex policies to manage medical costs. The process of determining whether a given procedure is appropriate for a patient's particular circumstances is called "utilization review." S.A. 21[21:31-42]. The methods covered by asserted claim 52 involve a computer system that determines, based on criteria provided by the managed-care organization and data from the provider concerning the patient and patient

symptoms, whether a proposed procedure requires utilization review. *Id.* If it does, the system withholds payment until utilization review approves the procedure. *Id.*

The '105 patent describes two embodiments of the invention: a "diagnostic" system and a "utilization-review" system. P.A. 19a. A diagnostic system analyzes the symptoms reported by the provider and "prepares a list of the most likely medical condition[s] corresponding to such symptoms, together with the generally approved and/or recommended treatment protocols." *Id.*; S.A. 13[6:64-67]. In other words, in a diagnostic system, there is a cause-and-effect relationship such that the entry of symptoms data causes the system to respond with a treatment proposal.

In a utilization-review system, however, the system does not propose a treatment. Instead, both symptoms data and the proposed treatment are entered into the system by, for example, the treating physician. P.A. 19a. It is undisputed that the '105 patent discloses a utilization-review system. P.A. 20a; S.A. 15[9:53-10:17]. It is also undisputed that Highmark's accused system is a utilization-review system. P.A. 19a.

2. The principal noninfringement issue in the parties' presuit negotiations, the district court, and the merits appeal concerned claim element 52(c):

> (c) entering through said input means into said data processor data symbolic of patient symptoms for tentatively identifying a proposed mode of treatment . . . .

J.A. 297-300. The dispute did not involve how Highmark's system operated, but only what this claim language covered. That is, the sole noninfringement issue was a claim-construction dispute. While both parties agreed that the claim language covered *at least* the diagnostic-system embodiment, they disagreed regarding whether it also covered utilization-review systems. Specifically, Allcare contended—from the presuit negotiations through the merits appeal[2]—that the claim covered systems, like Highmark's, where the doctor entered

---

[2] Highmark repeatedly, but incorrectly, suggests that Allcare never advanced this claim construction until the attorneys'-fees appeal. Br. 3 (alleging that in the second appeal, Allcare "relied on a newly minted claim-construction theory that Allcare did not advance" previously); *see also id.* at 18, 49; Blue Cross Br. 6. As the panel majority explained, "this theory as to the scope of claim 52 was argued repeatedly by Allcare." P.A. 21a. Although the majority also stated that "Allcare may not have pointed to the specification as an argument in support of its theory" (*id.*), in reality, Allcare did. *See* J.A. 286 (pointing to the specification's disclosure of "the utilization review smart system [as] an alternative embodiment"); J.A. 300 (special master's claim-construction report and recommendation, refusing to decide whether "52(c) also covers the *disclosed* utilization review smart system, *as Allcare proposes*" (emphasis added)).

both patient symptoms and a proposed mode of treatment. J.A. 493-94, 299; P.A. 19a-20a. During the litigation, Allcare's expert prepared an infringement chart showing how Highmark's system met this limitation under Allcare's construction. J.A. 333-43.[3]

3. Highmark was not the first healthcare company to raise this defense. Before this lawsuit began (and contemporaneously with negotiating with Highmark), Allcare was involved in a lawsuit against Trigon Healthcare, Inc., in the Eastern District of Virginia, *Allcare Health Management System, Inc. v. Trigon Healthcare, Inc.*, No. 02-756-A (Hilton, C.J.). Trigon's noninfringement defense was virtually identical to the defense Highmark later raised in this action—that the '105 patent was limited to a diagnostic system and could not cover a utilization-review system. J.A. 540-45. Chief Judge Claude Hilton rejected this argument. J.A. 647-48; *see also* J.A. 541-48.

4. In this case, the claim-construction briefs addressed the principal issue: whether the claims cover utilization-review systems or are limited to

---

[3] Highmark again distorts the record when it says that Allcare's construction was "inconsistent with concessions made by Allcare's expert." Br. 3. To the contrary, under Allcare's construction, the claim covered utilization-review systems, and Allcare's expert explained how the operation of Highmark's system "meets the definition of utilization review" under the then-current construction. J.A. 340.

diagnostic systems. The construction Allcare proposed for element 52(c) in this case was (as Highmark and the district court acknowledged) "remarkably similar" to Judge Hilton's construction from the *Trigon* case. CAFC A11974.

5. After the claim-construction briefs were filed, but before any hearing on the issues, District Judge Terry R. Means issued a notice of intent to appoint a special master. J.A. 232-34. Judge Means explained that he recently had "devoted the great portion of [his] time to reviewing the parties' filings on claim construction," but that he was "unable to issue a ruling on claim construction as the matter involves issues of such complexity that the Court cannot ably devote itself to that matter as well as manage its civil and criminal dockets." *Id.* Accordingly, Judge Means ruled that "[i]n light of the Court's difficulty in ruling on the claim construction issues in this cause, the Court finds that the pretrial matter of claim construction in this case is an exceptional one that cannot be addressed effectively and timely by the Court." J.A. 233. Judge Means thus appointed Don Martens, a well-known and highly regarded patent litigator, as special master. CAFC A6655.

The special master issued a 51-page report and recommendation on claim construction. In his report, he rejected Highmark's attempt to limit element 52(c) to a diagnostic system. J.A. 300. Indeed, he went even further and said that he was refusing to decide "whether the accused method is

covered by element 52(c)" because "[t]hat is an infringement issue for the trier of fact, not a claim construction issue." *Id.*

Judge Means adopted the special master's report in its entirety, with no modification. J.A. 314-16.

6. Having defeated Highmark's attempt to limit the claims to a diagnostic system, Allcare pressed forward with its infringement case. Allcare's infringement expert, Dr. Holland, showed in his report how infringement could be proven under the district court's claim construction. J.A. 322-60. In particular, Dr. Holland explained why the authorization procedure for Highmark's system "meets the definition of utilization review" in the claim-construction order. J.A. 340.

7. When Highmark subsequently moved for summary judgment of noninfringement, the court reappointed Mr. Martens as special master. The special master's 33-page report recommended that summary judgment of noninfringement be entered in Highmark's favor. But in this order, the special master changed his earlier claim-construction position. Specifically, contrary to his earlier decision, the special master found that claim element 52(c) *was* limited to a diagnostic system (and thus

excluded the disclosed utilization-review embodiment). J.A. 387.[4]

Although the special master ruled against Allcare, he never indicated that Allcare's position was baseless. To the contrary, at the conclusion of oral argument on the summary-judgment issues, the special master told the parties that "there are some difficult issues here and I will do my very, very best to do them right, and that's all I can promise you." J.A. 571.

Judge Means then adopted the special master's report (again, without substantive change) and entered final judgment of noninfringement. J.A. 442-45; CAFC A11934.[5]

---

[4] Judge Dyk, one of the Federal Circuit judges who presided over both the merits appeal and the sanctions appeal, explained that it appeared to him "that what happened here was that you had an initial claim construction from the Special Master which was then elaborated, if you will, in connection with the summary judgment decision." J.A. 631.

[5] Although we cannot completely discount the possibility that there was one, the case docket does not show that Judge Means ever held a hearing during this phase of the action. The docket shows a number of hearings during this time, but they were presided over by Judge Gary Lancaster of the Western District of Pennsylvania (CAFC A90[Dkt.16]) and (after transfer) by Northern District of Texas Magistrate Judge Irma Ramierez, who resolved some discovery disputes (CAFC A111-12[Dkt.296,303], A118-19[Dkt.392,396]). The only hearing shown in the docket as involving Judge Means concerned the motions for reconsideration that were filed after the

The Federal Circuit affirmed summary judgment without issuing a written opinion. CAFC A12607-09.

8. While the merits appeal was pending, Highmark moved for an exceptional-case finding. Allcare opposed the motion and asked for a hearing on the issue. The district court declined to hold a hearing, granting Highmark's exceptional-case motion on the papers. P.A. 44a-96a. There is no indication that the special master was consulted for his views on the merits of Allcare's positions.

In its order, the district court found that Allcare should have realized early in the case that Highmark's utilization-review system lacked claim element 52(c) (P.A. 72a-73a), notwithstanding that the claim-construction order in this case (like Judge Hilton's in *Trigon*) rejected Highmark's argument that this element was limited to a diagnostic system (P.A. 75a).

Although the construction of claim 52 was the principal focus of the exceptional-case determination, the district court also discussed three ancillary issues. First, it held that Allcare asserted allegedly meritless claim-preclusion defenses of res judicata and collateral estoppel, even though the

---

exceptional-case order was issued. CAFC A139[Dkt.626]. These motions, which were later granted, asked Judge Means to vacate his decision to sanction counsel under Rule 11. P.A. 103a.

law was unsettled regarding the viability of Allcare's theory and Allcare voluntarily withdrew these defenses promptly after learning additional facts. P.A. 81a-82a. Additionally, the court criticized Allcare for allegedly presenting several different claim constructions, but never identified any *material* change to Allcare's claim-construction position or any harm caused by Allcare's changed language. P.A. 82a-83a. To the contrary, the court noted that Allcare argued that element 52(c) did not limit the claim to a diagnostic system (P.A. 74a), which was consistent with Allcare's claim-construction position even before this litigation was filed (P.A. 46a-47a). Further, with regard to Highmark's complaint that Allcare's shifting positions necessitated a new round of briefing (CAFC A11955), *both* parties had agreed that they and the court would benefit from rebriefing to address an intervening Federal Circuit decision on claim construction. J.A. 228-30.

The district court also faulted Allcare for arguing in the Pennsylvania court where this action was originally filed (as a declaratory-judgment action by Highmark) that Allcare "did not control the manner in which Seaport's Surveys, an independent contractor, went about *completing* the surveys." P.A. 84a (emphasis in original). The district court did not conclude that the statement was false, but rather said that it was "at best obfuscatory and it strains the bounds of zealous advocacy." P.A. 86a. Despite this criticism, it is clear that this declaration played at best a minimal role in the exceptional-case

finding since the district court also noted that "[t]he Western District of Pennsylvania does not appear to have placed much weight on Allcare's representation regarding the degree of control over the Seaport Survey" (*id.*), and it later observed that "if any court were to issue sanctions based on the motion, it would be most appropriate for the Western District of Pennsylvania to do so" (P.A. 141a).

9. Allcare appealed the district court's exceptional-case determination. The Federal Circuit panel hearing the exceptional-case appeal included Circuit Judges Timothy Dyk and Pauline Newman, who heard the first appeal. CAFC A12607; P.A. 2a. Judges Dyk and Newman issued the Federal Circuit's decision over the dissent of the third panel member, Judge Haldane Mayer.

The majority began its analysis by citing *Brooks Furniture Manufacturing, Inc. v. Dutailier International, Inc.*, 393 F.3d 1378 (Fed. Cir. 2005), which provides a useful overview of the Federal Circuit's approach to exceptional-case findings under Section 285. In determining whether a case is exceptional, a court first determines whether there has been some material, inappropriate conduct, such as willful infringement, fraud or inequitable conduct in procuring the patent, litigation misconduct, vexatious or unjustified litigation, or conduct that violates Rule 11. *Id.* at 1381. Absent misconduct in procuring the patent or in the litigation, an exceptional-case finding can be found only if clear and convincing evidence demonstrates that the

litigation was both (1) brought or maintained in subjective bad faith and (2) objectively baseless. *Id.* at 1381-82; *see also iLOR, LLC v. Google, Inc.*, 631 F.3d 1372, 1376-78 (Fed. Cir. 2011).

The Federal Circuit adopted this two-pronged test from this Court's decision in *Professional Real Estate Investors, Inc. v. Columbia Pictures Industries, Inc.*, 508 U.S. 49 (1993) ("*PRE*"). *Brooks*, 393 F.3d at 1381. Under *PRE*, litigation can be deemed objectively baseless only if "no reasonable litigant could realistically expect success on the merits." 508 U.S. at 60.

Brooks also noted that "for an exceptional case, the decision to award attorney fees and the amount thereof are within the district court's sound discretion." *Brooks*, 393 F.3d at 1382. The majority expressly recognized the discretionary nature of the district court's decision *whether to award attorneys' fees*. P.A. 183a. Under the Federal Circuit's precedents, which are consistent with every other circuit's and this Court's precedents, "[a] district court abuses its discretion when its decision is based on clearly erroneous findings of fact, is based on erroneous interpretations of the law, or is clearly unreasonable, arbitrary or fanciful." *iLOR*, 631 F.3d at 1376 (citation omitted); *see also Koon v. United States*, 518 U.S. 81, 100 (1996) ("A district court by definition abuses its discretion when it makes an error of law.").

Applying the *Brooks* standard, the majority reviewed all five bases for the district court's

exceptional-case determination. The majority recognized that the "central issue" in this case was "whether Allcare's infringement counterclaims against Highmark were frivolous" and thus applied *PRE*'s objective-baselessness standard to those allegations. P.A. 8a. Because the issue of objective reasonableness on a given set of facts was an issue of law (*PRE*, 508 U.S. at 63), the majority reviewed de novo the district court's objective-baselessness determination. P.A. 9a-10a n.1.

In reviewing the district court's decision, the majority never questioned a single finding of fact the district court made. Instead, the majority's analysis was at all times directed to the district court's legal conclusions.

Specifically, on the "central issue" in the case, Allcare's infringement claims, the majority considered only whether Allcare's constructions for claims 52 and 102 were reasonable. P.A. 14a ("The key question with respect to claim 102 was whether the preamble . . . was a claim limitation and, if so, whether it required patient and employer interaction."); P.A. 19a ("The district court's exceptional case finding with respect to claim 52 centered on Allcare's lack of basis for its claim construction position."). This Court has held that claim construction, at least where the construction is based solely on the intrinsic evidence of the patent itself, is an issue of law. *See Markman v. Westview Instruments, Inc.*, 517 U.S. 370, 384 (1996) (stating that "construing the patent" is a "question of law").

Accordingly, the panel independently reviewed Allcare's claim-construction positions, finding that Allcare's construction for claim 52 was reasonable (P.A. 19a-22a), but that its construction for claim 102 was not (P.A. 14a-16a). Even though it reviewed the claim-construction issues without deference, the panel deferred to the district court with regard to the subjective prong of *Brooks*, finding that it "did not clearly err in concluding that Allcare's claim 102 allegations were brought in subjective bad faith." P.A. 18a.

The majority also considered the three ancillary bases for the district court's exceptional-case determination. First, the majority concluded that Allcare's assertion of res judicata and collateral estoppel was not frivolous because, at that time, the *law* was unsettled regarding the viability of Allcare's theory and there was no dispute that Allcare promptly and voluntarily withdrew those assertions after learning additional facts tending to undermine them. P.A. 24a-26a. Second, the panel reversed the district court's finding concerning Allcare's allegedly "shifting claim construction" because "[t]he constructions proffered by Allcare [did] not differ in substance" (P.A. 28a) and "Highmark itself conceded that new claim construction briefs in light of *Phillips* [*v. AWH Corp.*, 415 F.3d 1303 (Fed. Cir. 2005),] were desirable and would benefit the district court" (P.A. 27a-29a). Third, the majority found that the district court erred as *a matter of law* in "sanctioning conduct before a different tribunal." P.A. 29a-31a.

As a result, the majority held that the district court's exceptional-case determination could be based on the assertion of claim 102, but not on "Allcare's other claims and actions" in this case. P.A. 31a. The majority therefore remanded the case so that the district court could determine the award attributable to Allcare's assertion of claim 102.

SUMMARY OF ARGUMENT

The objective reasonableness of a legal position has long been subject to de novo review in other contexts, and the Federal Circuit correctly applied that standard in the context of Section 285. Here, the Federal Circuit rejected the district court's assessment of Allcare's objective reasonableness without challenging a single factual finding of the court. Thus, this case does not run up against the rule that a district court's factual findings are reviewed only for clear error. The Federal Circuit's decision turned principally on its conclusion that Allcare brought suit based on a reasonable claim construction, notwithstanding that it ultimately lost. Stated otherwise, the Federal Circuit examined the undisputed facts and concluded that the district court's decision on a legal issue was incorrect. That is *exactly* what appellate courts are supposed to do.

Moreover, Highmark is wrong to argue that the objective reasonableness of Allcare's claim-construction position was factual in nature. This Court has held that claim construction is a question of law, and it follows that the reasonableness of a

litigant's claim-construction position, involving no disputed facts, is itself a question of law.

Highmark also argues that, irrespective of whether objective reasonableness is a legal question, policy reasons favor deference to all of the district court's conclusions related to attorneys' fees under Section 285. And Highmark argues that these policy reasons extend to *all aspects* of a Section 285 determination, including decisions regarding pure questions of law.

But Congress created the Federal Circuit for the express purpose of increasing uniformity in the application of patent law. And that purpose can be served only if the Federal Circuit applies de novo review to questions involving the interpretation of the patent laws. Moreover, the Federal Circuit decides many more patent cases than any individual district court and is therefore much better suited to decide whether a litigant's ultimately unsuccessful position was nonetheless an objectively reasonable one.

Highmark asserts that the decision below is inconsistent with *Pierce* and *Cooter*, but those cases favor Allcare, not Highmark. In *Pierce*, for example, the Court recognized that appellate tradition is a major factor in determining the standard of review. And courts historically have reviewed objective-baselessness determinations de novo. *Pierce* also looked to the language of the statute involved. That statute, the Equal Access to Justice Act ("EAJA"), provided that "attorney's fees shall be awarded

'unless *the court finds* that the position of the United States was substantially justified.'" 487 U.S. at 559 (citation omitted). As the Court recognized, this language emphasized that the decision was for the district court, suggesting appellate deference. But the Court specifically observed that the opposite conclusion might have been drawn if that language had been absent from the statute. And here, while the ultimate decision whether to award fees under Section 285 is discretionary, nothing in the section's language commits any underlying decision, such as whether a position is objectively reasonable, to the discretion of the district courts. *Pierce* also noted that the typically small dollar amount of EAJA awards counseled in favor of deferential review while larger awards might suggest a more-intensive review. That is the case here. Indeed, along with larger fee awards, patent cases also commonly involve large potential damages awards. As a result, providing de novo review of Section 285 determinations would not raise the same concern, recognized in *Pierce*, that providing de novo review would result in the generation of additional appeals that would not otherwise be pursued. Finally, Congress's desire for national uniformity in patent law would be undermined by deferential review of objective-baselessness determinations in Section 285 cases. Indeed, this case—where a position was determined to be *correct* in Virginia but *baseless* in Texas—perfectly illustrates the problems that variability among the district courts would create.

Cooter also contradicts Highmark's position. In *Cooter*, among other things, this Court held that the district court's ability to consider the "local bar's litigation practices" made it "best situated" to determine whether a Rule 11 sanction is warranted. As mentioned above, however, Congress has expressly determined that local variations in the approach to patent litigation are undesirable, so it created the Federal Circuit to bring national uniformity to how courts interpret and apply the U.S. patent laws. Indeed, the decidedly nonlocal nature of patent-law practice is reflected in this case, where the special master appointed by Judge Means was a patent attorney from California. *See* http://knobbe.com/attorneys/don-martens.

Highmark makes a number of additional arguments, including that the Federal Circuit's decision conflicts with earlier Federal Circuit and regional-circuit cases regarding Section 285, and that it conflicts with regional-circuit cases interpreting the Lanham Act's fee provision, which includes the same language as Section 285. But none of these cases is inconsistent with the Federal Circuit's decision here. All of them held that the ultimate decision whether to award attorneys' fees is committed to a district court's discretion, but Allcare has never contested that. None of them held that purely legal aspects of a district court's fee determination should be reviewed deferentially. In fact, there are many examples where appellate courts, in reviewing fee awards, reviewed the underlying legal decisions without deference.

This Court is also considering the standard for exceptional-case determinations in the *Octane* case. But regardless of the outcome in *Octane*, the result here would be unchanged. The question Highmark presented to this Court did not challenge the *Brooks* standard. To the contrary, it presumed that the objective-baselessness test applies. So Highmark cannot now argue under a different standard. But even if the Court were to adopt a more open-ended test for exceptionality and apply it to this case, de novo review would still be required. Under essentially any test that could be announced in *Octane*, the focus of the inquiry in this case would remain the same—was Allcare's construction of claim 52 objectively reasonable? And it would be immaterial whether that question were asked as part of the specific two-prong test of *Brooks* or instead as part of a larger, open-ended test. The question would remain a question *of law*, reviewed de novo.

Finally, Highmark argues that the Court should adopt a deferential standard of review here because it is necessary to discourage NPEs (nonpracticing entities) from bringing meritless cases. But Highmark's argument turns on its entirely unfounded assertion that relaxing the standard of review would lead to more fee awards against patentees, particularly NPEs. Indeed, Highmark cannot support its assertion with anything more than the suggestion that any chance to review those awards would reduce their incidence,

which is nothing more than a complaint that fee awards are difficult to obtain—as Congress intended.

ARGUMENT

A. Objective reasonableness under Section 285 is an issue of law that is reviewed de novo.

1. This Court's decisions establish that objective reasonableness is an issue of law.

The objective-reasonableness standard derives from the concept of "probable cause": "Probable cause to institute civil proceedings requires no more than a 'reasonabl[e] belie[f] that there is a chance that [a] claim may be held valid upon adjudication.'" *PRE*, 508 U.S. at 62-63 (alterations in original) (citation omitted).

The long history of probable cause and objective reasonableness establishes that the question of whether a given set of facts justified bringing suit is ultimately a legal question. In *PRE*, this Court looked to the historical development of probable cause to confirm the *legal* nature of objective reasonableness on a given set of facts. *Id.* (citations omitted).

Indeed, determinations of probable cause to support qualified immunity are frequently made on summary judgment (*Mitchell v. Forsyth*, 472 U.S. 511 (1985)), either because there are no disputed

facts or by viewing the facts in the light most favorable to the nonmoving party. In either case, the issue of objective reasonableness is "a pure question of law." *Scott v. Harris*, 550 U.S. 372, 381 n.8 (2007) (noting that at the summary-judgment stage, the issue of probable cause reduces to "a pure question of law" because the court has "determined the relevant set of facts and drawn all inferences in favor of the nonmoving party *to the extent supportable by the record*") (emphasis in original).

Notwithstanding this Court's precedents, Highmark insists that objective reasonableness is a mixed issue of law and fact. Br. 17. To make this argument, Highmark raises the specter of factual disputes that may need to be resolved in some objective-reasonableness determinations. Br. 24.

But that does not mean, as Highmark argues, that the legal determination of reasonableness is so intertwined with the underlying facts that it would be futile to try to consider them separately. To the contrary, courts have historically treated the factual underpinnings as distinct, and separately determinable, from the ultimate legal conclusion of objective reasonableness:

> The authorities are substantially uniform that the question of probable cause, however presented, is a question of law, and, therefore, one to be determined by the Court. When the facts in reference to the alleged probable cause are admitted, or

> established beyond controversy, then the determination of their legal effect is absolute, and the jury are to be told that there was or was not probable cause, as the case may be. When, however, the facts are controverted, and the evidence is conflicting, then the determination of their legal effect by the Court is necessarily hypothetical, and the jury are to be told that if they find the facts in a designated way, then that such facts, when so found, do or do not amount to probable cause. But in neither case are the jury to determine whether or not the established facts do or do not amount to probable cause.

Harkrader v. Moore, 44 Cal. 144, 152 (Cal. 1872); *see also Molton Realty Co. v. Murchison*, 212 Ala. 561, 563 (1925) ("[W]hat facts and whether particular facts exist, in a case in which the evidence as to the facts or any necessary particular fact is in dispute, is a question for the jury; but whether such facts amount to probable cause is a question of law for the court."). This rule can be traced back at least to 18th century England. *See, e.g., Johnstone v. Sutton*, 99 Eng. Rep. 1225, 1243-44 (Ex. 1786) ("Whether the circumstances alleged to [show the cause] probable, or not probable, are true and existed, is a matter of fact; but whether, supposing them true, they amount to a probable cause, is a question of law . . . .").

In short, where the facts are undisputed, the question of objective reasonableness reduces to an issue of law. And where the facts are disputed, they can be viewed in the light most favorable to the nonmoving party.

2. Here, the objective-reasonableness determination is a pure question of law.

When a court examines the reasonableness of an unsuccessful litigant's actions, there often are no disputed facts that need to be resolved. The particular positions taken by the party, for instance, are rarely, if ever, in dispute. Further, the facts and law alleged to support those positions are, in most cases, reflected in the record. *See, e.g.*, P.A. 9a-11a n.1; *Covad Commc'ns Co. v. Bell Atl. Corp.*, 398 F.3d 666, 677 (D.C. Cir. 2005) (finding as a matter of law, based on its review of district court and Federal Circuit opinions, that patent suit was not objectively baseless); *FilmTec Corp. v. Hydranautics*, 67 F.3d 931, 938 (Fed. Cir. 1995) (stating that "[t]he facts of this case have been established by prior litigations," so "there is no dispute over the facts, [and] the question of whether or not a cause of action is reasonable or an abuse of process is a question of law"). And again, this principle has been recognized since at least 18th century England. *See Johnstone*, 99 Eng. Rep. at 1245 ("There is no fact to be tried by the jury. The allegation is a proposition in law, and stands upon the record.").

Highmark alleges, with no real analysis or support, that it and Allcare "disagree as to nearly all of the relevant facts—including, for example, the characteristics of Highmark's system, the adequacy of Allcare's pre-filing investigation, and the background of the patent." Br. 43. But this is not so. In this case, *all* of the relevant facts underlying the district court's objective-baselessness determination were undisputed.

There was no dispute, for example, regarding the relevant characteristics of Highmark's system. Both parties agreed that Highmark's system does not include a diagnostic system but "does include a utilization review system . . . ." J.A. 383; P.A. 19a. Nor did the parties dispute that the patent-in-suit described a utilization-review system as an embodiment of the invention. P.A. 20a; S.A. 15[10:3-8].

It was also undisputed that Judge Hilton of the Eastern District of Virginia had previously construed claim 52 to cover a utilization-review system in the *Trigon* case (J.A. 652-54), just as it was undisputed that the special master refused to exclude utilization-review systems from the claims in his claim-construction report (which was adopted wholesale by Judge Means) (*see supra* at 9-10).

Finally, while the parties did dispute the adequacy of Allcare's prefiling investigation, that factor did not weigh in the district court's objective-baselessness determination. P.A. 23a n.6, 53a n.3 (district court noting that the adequacy of Allcare's

prefiling investigation was relevant to Section 285, but only because a Rule 11 violation could justify an exceptional-case finding, not because an investigation was relevant to the objective reasonableness of a party's litigation position).

In short, therefore, the reasonableness of Allcare's infringement theory reduced to a pure question of law: was it objectively reasonable for Allcare to contend that claim 52 covered Highmark's utilization-review system?

3. Determinations of objective reasonableness under Section 285 should be reviewed de novo on appeal.

Although this Court has never addressed the appropriate standard of review for objective-baselessness findings in the Section 285 context, it has in other areas of the law. For example, in *Ornelas v. United States*, 517 U.S. 690, 699 (1996), this Court held, in the Fourth Amendment context, that "as a general matter determinations of reasonable suspicion and probable cause should be reviewed *de novo* on appeal." The Court provided three reasons for de novo review of probable-cause determinations, each of which applies equally in the Section 285 context.

First, the *Ornelas* Court observed that "[a] policy of sweeping deference would permit, '[i]n the absence of any significant difference in the facts,'" different outcomes depending on the "general conclusions" different district courts might reach. *Id.*

at 697 (second alteration in original) (citation omitted). "Such varied results," continued the Court, "would be inconsistent with the idea of a unitary system of law." *Id.*

This concern is heightened in the context of patent law, where Congress specifically intended to eliminate regional variances with the creation of the Federal Circuit. *See Markman*, 517 U.S. at 390 ("It was just for the sake of such desirable uniformity that Congress created the Court of Appeals for the Federal Circuit as an exclusive appellate court for patent cases, observing that increased uniformity would 'strengthen the United States patent system in such a way as to foster technological growth and industrial innovation.'" (quoting H.R. Rep. No. 97-312, at 20 (1981))). Indeed, the variation Congress sought to eliminate by creating the Federal Circuit was variation among the regional circuits. What deferential review would do, however, is guarantee variation not just among the circuits, but among the 94 districts and *hundreds* of district judges. Reports reveal vastly different patentee success rates in different districts,[6] and even among different judges within a single district.[7] Attitudes towards patents and patent-law concepts also vary from district to

---

[6] LegalMetric Nationwide Patent Litigation Report, Contested Win Rates, at 6-9 (May 2012).

[7] *E.g.*, LegalMetric District Report California Northern District Court in Patent Cases, at 14-16 (Jan. 1991-May 2013).

district and judge to judge.[8] Indeed, in this case, two different judges—one in Virginia and one in Texas—reached opposite conclusions about the merits of Allcare's construction, with one finding it correct and the other finding it not just incorrect, but baseless.

Second, the *Ornelas* Court reasoned that the concept of probable cause cannot be "readily, or even usefully, reduced to a neat set of legal rules." *Ornelas*, 517 U.S. at 695-96 (quoting *Illinois v. Gates*, 462 U.S. 213, 232 (1983)). Instead, "the legal rules for . . . probable cause acquire content only through application," so "[i]ndependent review is therefore necessary if appellate courts are to maintain control of, and to clarify, the legal principles." *Id.* at 697.

Likewise, there can be no precise rules for determining whether a patent-law position is objectively baseless. As a result, de novo review will better support the Federal Circuit's task of guiding district courts towards a uniform application of the patent laws. *See also Miller v. Fenton*, 474 U.S. 104, 114 (1985) (holding that where the "relevant legal principle can be given meaning only through its application to the particular circumstances of a case, the Court has been reluctant to give the trier of fact's

---

[8] Kimberly A. Moore, *Forum Shopping in Patent Cases*, 79 N.C. L. Rev. 889 (2001); Richard A. Posner, *Why There Are Too Many Patents in America*, The Atlantic (July 12, 2012), http://www.theatlantic.com/business/archive/2012/07/why-there-are-too-many-patents-in-america/259725/.

conclusions presumptive force and, in so doing, strip a federal appellate court of its primary function as an expositor of law").

Moreover, this Court has recognized that the Federal Circuit has "special expertise" in patent issues. *Warner-Jenkinson Co. v. Hilton Davis Chem. Co.*, 520 U.S. 17, 40 (1997). Obviously, district courts will be more likely to reach sound conclusions with the Federal Circuit's guidance. Highmark questions the Federal Circuit's expertise because some district judges hear a large number of patent cases while some Federal Circuit judges come to the court without patent-law experience. Br. 33 n.6. Of course, it is possible that a case could be decided by an experienced district judge, and the appeal heard by a panel of recently appointed Federal Circuit judges without previous patent-law experience. But that cherry-picked example can hardly compel deferential review. It cannot be disputed that, as a whole, Federal Circuit judges consider many more patent cases and many more patent-law issues than almost all district judges. Nor can it be disputed that this consideration inevitably produces a highly patent-experienced Federal Circuit bench. As an example, few jurists have more patent experience than the two judges who made up the panel majority here. As approximate estimates, Judge Dyk, in more than thirteen years on the bench, has participated in 834 patent decisions and authored 298 opinions/concurrences/dissents, many involving claim-construction issues. And Judge Newman, with nearly thirty years on the bench, has participated

in 1,365 patent cases and authored 584 opinions/concurrences/dissents, again, many involving claim-construction issues.[9] This contrasts with the district judges who evaluated Allcare's position. The Eastern District of Virginia's Judge Hilton (who agreed with Allcare's position) has authored 18 opinions involving patent law (including three construing claims) over his 28-year career. Judge Means has authored 15 opinions involving patent law (including five in this case and three construing claims). This comparison is not intended as a criticism, but only to demonstrate the relative depth of experience at the Federal Circuit. This factor strongly militates against deferential review of objective-baselessness determinations in the Section 285 context.

Third, the *Ornelas* Court noted that "*de novo* review tends to unify precedent and will come closer to providing law enforcement officers with a defined 'set of rules which, in most instances, makes it possible to reach a correct determination beforehand as to whether an invasion of privacy is justified in the interest of law enforcement.'" 517 U.S. at 697-98 (quoting *New York v. Belton*, 453 U.S. 454, 458 (1981)). As the Court has explained, de novo review has the advantage of accuracy: "Courts of appeals . . . are structurally suited to the collaborative

---

[9] Counsel for Allcare estimated the numbers here by searching online databases, conservatively attempting to exclude dispositions of appellate motions.

juridical process that promotes decisional accuracy." *Salve Regina Coll. v. Russell*, 499 U.S. 225, 232 (1991). Similarly, de novo review of objective-baselessness determinations regarding patent-law issues will provide a body of case law from the Federal Circuit to help guide district courts in identifying positions that are objectively baseless. *See also Thompson v. Keohane*, 516 U.S. 99, 114-15 (1995) (holding that the appellate courts' "in custody" determinations will help guide future district court decisions).

The Federal Circuit and the regional circuits have reached the same conclusion. In deciding whether to apply the sham exception to antitrust immunity, for example, they have consistently held that objective reasonableness is a legal issue reviewed de novo. The Federal Circuit reached this conclusion as early as 1995:

> The facts of this case have been established by prior litigations, and are therefore law of the case. Because there is no dispute over the facts, the question of whether or not a cause of action is reasonable or an abuse of process is a question of law. We review questions of law without deference to the trial forum.

FilmTec, 67 F.3d at 938 (citation omitted). And the regional circuits have agreed. *See, e.g.*, *Andrx Pharm., Inc. v. Elan Corp.*, 421 F.3d 1227, 1232, 1234 (11th Cir. 2005) (observing that "application of

the *Noerr–Pennington* doctrine is a question of law, and therefore also reviewed *de novo*," and proceeding to conclude, with no deference given to the district court, that "it is manifest that Elan's patent infringement proceedings were not objectively baseless"); *Covad*, 398 F.3d at 677 (concluding, without giving deference to the district court, that "[o]ur review of the patent courts' opinions convinces us that Bell Atlantic's case against Covad was not objectively baseless").

Similarly, in other areas of law that turn on whether an objectively reasonable person would have believed that his or her actions were *legally* justified, the issue is treated as one of law and reviewed without deference. For instance, in determining the issue of qualified immunity, courts must consider "whether an objectively reasonable officer would have believed his conduct to be lawful, in light of clearly established law," which "is a question of law that must be resolved by the court, not the jury." *Pitt v. District of Columbia*, 491 F.3d 494, 509-10 (D.C. Cir. 2007). Likewise, in considering whether searches and seizures were legally justified, courts review de novo the issue of whether the person challenging the officer's actions had a reasonable expectation of privacy. *See, e.g.*, *United States v. Nerber*, 222 F.3d 597, 599 (9th Cir. 2000) ("Whether a citizen's expectation of privacy was objectively reasonable is a question of law reviewed de novo."); *United States v. Garzon*, 119 F.3d 1446, 1449 (10th Cir. 1997) (holding that "a determination of whether the defendant retained an

objectively reasonable expectation of privacy in the property that society will recognize is a question of law that we review *de novo*"); *see also* Google Br. 24-25 (collecting additional cases applying de novo review to findings of reasonableness).

To be sure, to the extent factual findings underlie a conclusion of objective reasonableness or probable cause, those findings are reviewed deferentially. But despite Highmark's quest for a unitary standard of deferential review, the more commonly adopted approach is that followed by the Federal Circuit here—de novo review is applied where appropriate, including to legal decisions, yet deference is given to underlying factual findings. *See, e.g.*, *United States v. Bajakajian*, 524 U.S. 321, 336 n.10 (1998) (requiring factual findings relating to excessiveness inquiries to be accepted unless clearly erroneous, but stating that question of "whether a fine is constitutionally excessive," given those facts, is reviewed de novo); *Thompson*, 516 U.S. at 112-13 (recognizing the deference given to factfinding regarding circumstances surrounding interrogation but holding that applying law to those facts for an "in custody" determination requires de novo review).

And here, the Federal Circuit followed this recognized approach, examining objective baselessness without questioning any of the district court's factual findings. Indeed, as has been noted previously, none of the facts that were relevant to the district court's objective-baselessness

determination were disputed. Further, when the Federal Circuit considered the district court's factfinding in the specific context of *PRE*'s *subjective* test, it applied the deferential clearly erroneous standard and affirmed. P.A. 18a.

B. *Pierce* and *Cooter* both support the conclusion that objective reasonableness should be reviewed de novo in the context of Section 285.

Against the long history and uniform body of case law dealing with probable cause and objective reasonableness as questions of law, reviewed de novo, Highmark is asking the Court to treat objective-reasonableness determinations made in the context of Section 285 differently. Highmark bases this request principally on this Court's decisions in *Pierce* and *Cooter*. Highmark's position is, at bottom, that because *Pierce* and *Cooter* both involved attorneys'-fees issues, and this Court concluded in each case that a unitary standard of deferential review was appropriate, it follows in this case that all aspects of Section 285 determinations, including legal decisions such as objective reasonableness, should be reviewed deferentially. But *Pierce* specifically disavowed any "attempt to discern or to create a comprehensive test" for standards of review. 487 U.S. at 559. And rather than requiring deferential review in this case, as Highmark advocates, *Pierce* and *Cooter* support the conclusion that de novo review should be applied.

1. The general rule, expressly recognized in Pierce, is that district courts' legal determinations are reviewed de novo on appeal.

In *Pierce*, this Court expressly recognized that the general rule is that issues of law are reviewed without deference. *Pierce*, 487 U.S. at 558 ("For purposes of standard of review, decisions by judges are traditionally divided into three categories, denominated questions of law (reviewable *de novo*), questions of fact (reviewable for clear error), and matters of discretion (reviewable for 'abuse of discretion')."). Indeed, even where the district court's decision is reviewed under the otherwise deferential abuse-of-discretion standard, an appellate court generally gives no deference to legal conclusions that underlie the decision. *See, e.g.*, *Koon*, 518 U.S. at 100 (stating that even though the abuse-of-discretion standard of review is deferential, "[a] district court by definition abuses its discretion when it makes an error of law"); *see also United States v. Legros*, 529 F.3d 470, 474 (2d Cir. 2008) ("The abuse-of-discretion standard incorporates *de novo* review of questions of law (including interpretation of the Guidelines) and clear-error review of questions of fact.").

2. The contexts of Pierce and Cooter led this Court to find that deferential review was appropriate in those cases.

In *Pierce*, the Court departed from the general rule discussed above, instead concluding that the

determination of whether attorneys' fees should be awarded against the government under the EAJA should be reviewed under a unitary standard of deferential review. But the Court reached that conclusion based in part on the EAJA's statutory language, including the provision "that attorney's fees shall be awarded '*unless the court finds* that the position of the United States was substantially justified.'" *Pierce*, 487 U.S. at 559 (emphasis added) (citation omitted). The Court held that this language "suggest[ed] some deference to the district court." *Id.* But the Court also stated that if the statute simply said that fees should be awarded "unless the position of the United States was substantially justified," the inference of deferential review would evaporate. *Id.* And this is such a case. The ultimate decision whether to award fees under Section 285 is discretionary, but there is nothing in the language of Section 285—"The court in exceptional cases may award reasonable attorney fees to the prevailing party" (35 U.S.C. § 285)—that parallels the language of the EAJA or indicates that any underlying decision, such as whether a position is objectively reasonable, is for the district court to make. Indeed, as a grammatical matter, it is only the award of attorney fees that the word "may" is tied to in Section 285. Thus, as in the contrasting example given in *Pierce*, nothing in the language of Section 285 suggests that the *legal decisions* that might underlie a determination whether to award fees were being committed to the discretion of the district courts.

The legislative history of Section 285 supports the view that Congress intended appellate courts to review fee awards judiciously. In drafting Section 285, Congress deleted the broad discretionary language that had appeared in the predecessor statute—"The court may *in its discretion* award reasonable attorney's fees" 35 U.S.C. § 70 (1946) (emphasis added)—not to eliminate discretion in awarding attorneys' fees but to emphasize that Section 285 should be "interpreted by the courts" the same way Section 70 had been. S. Rep. No. 82-1979, (1952), at 30. That, however, does not help Highmark. First, Section 70 was interpreted in light of the long-recognized principle that, by definition, a court abuses its discretion when its decision is based on an erroneous legal conclusion. *See, e.g.*, *Dubil v. Rayford Camp & Co.*, 184 F.2d 899, 903 (9th Cir. 1950) ("It is not the duty of the reviewing court to interfere with the exercise of the discretionary power confided to the trial courts by Congress to award attorney fees in proper cases except where there is an abuse of discretion amounting to caprice or an erroneous conception of law on the part of the trial judge."). Second, as a general rule, appellate courts took a hard look at decisions to award fees under Section 70, particularly in cases where the district court had found a patentee's position to be baseless. *See, e.g.*, *Associated Plastics Cos. v. Gits Molding Corp.*, 182 F.2d 1000, 1006 (7th Cir. 1950) ("We do not believe the record justifies these findings or the entry of such a judgment. In considering the question at hand it must be remembered that when the patents issued they became clothed with the

presumption of validity."); *Park-In-Theatres, Inc. v. Perkins*, 190 F.2d 137, 142-43 (9th Cir. 1951) (concluding, without showing deference, that the record "afforded ample ground for a belief that the claim here in suit was sufficiently substantial to merit litigation"); *Wilson v. Seng Co.*, 194 F.2d 399, 404 (7th Cir. 1952) (holding that "in this case the record does not reveal sufficient evidence to justify a finding of bad faith or oppressive or vexatious or other inequitable conduct by plaintiffs which could be the basis of an award of attorney fees"). By deleting the discretionary language that some district courts had interpreted too freely, Congress thus encouraged appellate courts to continue their practice of engaging in a searching review of exceptional-case findings.

Cooter also involved a different context from the present case. There, the Court addressed sanctions awarded under Rule 11, which the Court said "requires a court to consider issues rooted in factual determinations," including the credibility of the person(s) who signed the filings in question. 496 U.S. at 401-02. In fact, the Court stated that it was nearly impossible to distinguish between the legal and factual aspects of a Rule 11 determination. *Id.* at 401. As discussed above, however, this Court has historically distinguished between the factual underpinnings of a probable-cause determination and the legal conclusion drawn from those facts. *See supra* at 24-26.

Indeed, contrary to Highmark's portrayal of *Cooter* as standing for the proposition that an appellate court should defer even to purely legal conclusions in the Rule 11 context, *Cooter* never held that. On the contrary, after framing the issue in *Cooter* as "whether the court of appeals must defer to the district court's legal conclusions in Rule 11 proceedings," the Court observed that distinguishing between legal and factual issues was "particularly difficult in the Rule 11 context" and that "[r]ather than mandating an inquiry into purely legal questions, such as whether the attorney's legal argument was correct, the Rule requires a court to consider issues rooted in factual determinations." 496 U.S. at 401. And the Court later stated that "[o]f course" the deferential standard the Court articulated "would not preclude the appellate court's correction of a district court's legal errors," including "relying on a materially incorrect view of the relevant law in determining that a pleading was not 'warranted by existing law or a good faith argument' for changing the law." *Id.* at 402. In short, *Cooter* expressly recognized the very principle Allcare relies on here. Even where the ultimate decision in a case is discretionary, and thus deferentially reviewed, underlying legal decisions are still reviewed de novo.

3. The policy considerations recognized in Pierce and Cooter strongly counsel for de novo review of the legal aspects of Section 285 determinations.

Pierce and *Cooter* were also based on policy concerns that counseled for deferential review. But those concerns, applied here, lead to the conclusion that objective-baselessness determinations, and other legal decisions made in the context of Section 285, should be reviewed de novo.

For instance, the *Pierce* decision relied largely on concerns that de novo review of EAJA determinations might strain appellate resources, both by creating numerous appeals that would not otherwise be filed and also by increasing the demands in each appeal. 487 U.S. at 560-61; *see also* Br. 48-49; U.S. Br. 27. But this is an unlikely concern in patent cases, where cases litigated to judgment in the district court will usually be appealed regardless of any exceptional-case allegations under Section 285. Additionally, the sheer size of the typical Section 285 award, which is typically many millions of dollars (P.A. 187a n.3, 10a n.1), is as likely to influence the decision to appeal as is the standard of review, especially since the objective-baselessness inquiry is typically tied up with the merits aspect of the appeal.

Cooter, moreover, held that the district court's familiarity with the "local bar's litigation practices" made it "best situated" to determine whether a Rule 11 sanction is warranted. *See* 496 U.S. at 404.

In patent law, however, Congress has determined that local variations in the approach to patent litigation are undesirable, so it created the Federal Circuit to bring national uniformity to how courts interpret and apply the U.S. patent laws. *See supra* at 29 (citing *Markman*, 517 U.S. at 390).

Indeed, it is hard to imagine that anything could be more inconsistent with the very purpose of the Federal Circuit than requiring deference to district judges on matters of patent law, whether in the context of Section 285 or in any other context. As noted above in discussing *Ornelas*, success rates in patent cases, as well as attitudes towards patents and patent-law concepts, vary widely from district to district and judge to judge. *See supra* at 29. Giving district judges the discretion on all aspects of Section 285 determinations, including legal decisions, would produce widely variable results. This would neither be a sensible approach nor one consistent with Congress's decision to create the Federal Circuit for the purpose of ensuring consistency in the development and application of patent law.

Relatedly, Highmark and several amici argue that the district court is better situated to make the objective-baselessness finding because it is "on the front lines of litigation," while the Federal Circuit, which has "only a short period of time" to interact with counsel at a hearing, must rely on "the briefs and the cold record" in reaching its decision. Br. 10-11, 17-18; AIPLA Br. 15-16; Yahoo! Br. 5; U.S. Br. 25-26. But whether that is so in some cases, it is

not true here. Because Judge Means found the issues particularly complex, he appointed a special master to handle the claim-construction and summary-judgment issues. *See supra* at 9. And having a special master is hardly unique to this case. *See Absolute Software, Inc. v. Stealth Signal, Inc.*, 659 F.3d 1121, 1131 (Fed. Cir. 2011) (recognizing the reasons special masters are appointed, including to deal with "complex or highly-technical issues, such as patent claim construction"). In any event, there is no reason to think that district judges' decisions on patent-law issues are more likely to be correct simply because the judges have "lived with" a case for some period of time. On the contrary, the consensus process of appellate review, particularly involving judges who have (more typically than not) spent years dealing principally with patent issues, increases the likelihood of reaching a correct result, and undoubtedly operates to create a more uniform body of patent law. And certainly the possibility that a district judge may in some cases be privy to nonrecord facts (a consideration noted in *Pierce*, 487 U.S. at 560) can play no part here. Even if Judge Means had dealt with the attorneys extensively, the objective reasonableness of a position cannot depend on some factor known only to the district court.

Finally, the (typically) large nature of the fee awards in patent cases also distinguishes both *Pierce* and *Cooter* from the present situation. The denial of rehearing below listed a series of cases where the fees and costs awarded in Section 285 cases were many millions of dollars. P.A. 187a n.3. In contrast,

Rule 11 sanctions and EAJA awards are usually much more modest. *Id.* Indeed, the relevance of this was expressly recognized in *Pierce*, where this Court observed that if an EAJA decision "ordinarily" involved an award of the magnitude in the case before it (where the award exceeded $1,000,000), rather than the small amounts (less than $3,000) they usually involve, "one might expect it to be reviewed more intensively." 487 U.S. at 563.

C. The constitutional right of access to the courts weighs in favor of de novo review.

Further compelling de novo review of objective-baselessness determinations under Section 285 are the rights at stake. As *PRE* explained, the First Amendment protects the right of access to the courts. 508 U.S. at 58, 60; *see also Cal. Motor Transp. Co. v. Trucking Unlimited*, 404 U.S. 508, 513 (1972) (extending *Noerr*'s protections to litigants and stating that "the right of access to the agencies and courts . . . is part of the right of petition protected by the First Amendment"). And this Court has repeatedly emphasized the importance of independent appellate review where constitutional rights are at risk. *See, e.g., Jacobellis v. Ohio*, 378 U.S. 184, 189 (1964) ("In other areas involving constitutional rights under the Due Process Clause, the Court has consistently recognized its duty to apply the applicable rules of law upon the basis of an independent review of the facts of each case."); *Bose Corp. v. Consumers Union of United States,*

Inc., 466 U.S. 485, 508 n.27 (1984) ("The simple fact is that *First Amendment* questions of 'constitutional fact' compel this Court's *de novo* review.") (emphasis added)).

Highmark asserts that "the-right-to-petition line of cases has nothing to do with" fee-award statutes generally or Section 285 specifically. Br. 43. But the cases Highmark cites fail to support its sweeping assertion. In *BE&K Construction Co. v. NLRB*, 536 U.S. 516, 537 (2002), for example, the Court noted only that its holding did not call into question the validity of fee-shifting statutes in general. But Allcare has never contended that fee-shifting statutes are unconstitutional per se. On the contrary, Allcare's point is simply that the First Amendment is *relevant* to the manner in which Section 285 determinations are reviewed, since fee awards, at least when they are large enough (as is certainly the case here), can unquestionably act to deter the initiation of lawsuits.

And the statement in *Premier Electrical Construction Co. v. National Electrical Contractors Ass'n*, 814 F.2d 358, 373 (7th Cir. 1987)—questioning whether the Constitution "has anything to say about fee-shifting statutes"—should be discounted for two reasons. First, it was dicta, since the case did not even involve a fee-shifting provision but instead concerned whether the costs of defending another action could be recovered as antitrust damages. *Id.* at 360. And second, in holding that litigation costs could be awarded even where the

predicate lawsuit was *not* a sham (*id.* at 372-76), the Seventh Circuit reached a decision that was inconsistent with this Court's later decision in *PRE*. *See* 508 U.S. at 60.

Highmark also cites *Bill Johnson's Restaurants, Inc. v. NLRB*, 461 U.S. 731, 743 (1983), for the proposition that "baseless litigation is not immunized by the First Amendment right to petition." Br. 43-44 (citation omitted); *see also* Google Br. 12. But just in making that point, Highmark implicitly acknowledges that *reasonable* litigation *is* protected by the First Amendment. Indeed, *Bill Johnson's* cautioned that judges "should be sensitive to these First Amendment values" when construing a statute. 461 U.S. at 741. Thus, while the Constitution does not immunize baseless litigation, it requires reviewing courts to independently ensure that lower courts properly determine whether that line has been crossed. Indeed, Allcare's position is simply that careful review of objective-baselessness determinations is appropriate because the potential of large fee awards burdens a party's First-Amendment right to access the courts to at least some degree.

Finally, as the Federal Circuit recently noted in *Kilopass Technology, Inc. v. Sidense Corp.*, No. 2013-1193, 2013 WL 6800885 (Fed. Cir. Dec. 26, 2013), in addition to the First Amendment rights recognized by this Court in *PRE*, patent rights themselves have constitutional underpinnings. Thus, the court noted this as an additional reason for

saying that attorneys' fees "should not be awarded as long as the patentee had an objectively reasonable basis for its claims." *Id.* at *13. This same principle is relevant here to favor applying de novo review.

D. Highmark's assertion that the decision below conflicts with other appellate decisions concerning Section 285 and the Lanham Act ignores the narrow issue presented here.

Highmark argues that the majority's decision conflicts with earlier Section 285 decisions, as well as with decisions under the Lanham Act. Br. 29-31. But Highmark misses the point. As we have repeatedly said, no one disputes that fee awards are committed to a district court's discretion. P.A. 183a. The question here is very different: should deference be given to a *legal* conclusion—the objective reasonableness of a claim-construction position—that is part of a Section 285 fee-award determination? And as we have shown, there is no merit to Highmark's position that a *legal* conclusion that is part of a Section 285 fee-award determination should be reviewed deferentially.

None of the cases that Highmark has cited dealing with Section 285 or the Lanham Act is inconsistent with this position. To the contrary, Section 285 and Lanham Act cases from both the Federal Circuit and other circuits have consistently stated the rule that legal questions are reviewed without deference. *See, e.g.*, *iLOR*, 631 F.3d at 1376

(Section 285 case: stating that "[a] district court abuses its discretion when its decision is based on clearly erroneous findings of fact, *is based on erroneous interpretations of the law*, or is clearly unreasonable, arbitrary or fanciful") (emphasis added) (citation omitted); *DePuy Spine, Inc. v. Medtronic Sofamor Danek, Inc.*, 567 F.3d 1314, 1337 (Fed. Cir. 2009) (Section 285 case: stating that the "court reviews the underlying factual findings for clear error and legal conclusions without deference"); *Atl. Fish Spotters Ass'n v. Daley*, 205 F.3d 488, 491 n.2 (1st Cir. 2000) (Lanham Act case: stating that because "errors of law" are abuses of discretion, "the effective standard of review depends upon the precise claim of error being asserted and not the nature of the case"); *Farberware Licensing Co. v. Meyer Mktg. Co.*, 428 F. App'x 97, 99 (2d Cir. 2011) (Lanham Act case: stating that a district court abuses its discretion "by making a mistake of law or fact or a clearly erroneous assessment of the evidence"); *Nat'l Ass'n of Prof'l Baseball Leagues v. Very Minor Leagues, Inc.*, 223 F.3d 1143, 1146 (10th Cir. 2000) (Lanham Act case: holding that, while the decision whether to award attorneys' fees is reviewed for abuse of discretion, "the district court's application of the legal principles underlying that decision" is reviewed de novo); *Stephen W. Boney, Inc. v. Boney Servs., Inc.*, 127 F.3d 821, 825 (9th Cir. 1997) (Lanham Act case: recognizing the distinction between "the district court's legal analysis and interpretation of the Lanham Act," which it said should be reviewed de novo, and other aspects of the lower court's fee decision).

Indeed, in addition to the fact that Highmark can point to no case holding that legal aspects of a Section 285 decision are to be reviewed deferentially, Highmark ignores the many cases in which, although it may not be explicitly stated, it is clear that the appellate court reviewed the lower court's legal determinations without deference. *See, e.g.*, *iLOR*, 631 F.3d at 1378-80 (reviewing without deference the question of "whether the patentee's construction of claim 26—the only claim at issue—had any objective merit"); *DePuy Spine*, 567 F.3d at 1338 (holding that "the district court's understanding of the circumstances in which the reverse doctrine of equivalents may be asserted [was] incorrect"); *Old Reliable Wholesale, Inc. v. Cornell Corp.*, 635 F.3d 539, 543-48 (Fed. Cir. 2011) (reviewing the objective reasonableness of patentee's validity arguments without deference to the district court's *legal* analysis and finding "nothing frivolous" in those arguments); *Arbrook, Inc. v. Am. Hosp. Supply Corp.*, 645 F.2d 273, 279 (5th Cir. 1981) (reversing Section 285 fee award and giving no deference to district court's conclusion that patentee pursued its case based on invalid patent, determining instead that, while the patent was invalid, it could not be said that invalidity should have been apparent before trial); *Colortronic Reinhard & Co. v. Plastic Controls, Inc.*, 668 F.2d 1, 8-9 (1st Cir. 1981) (reversing fee award based on patentee's enforcement of Tschritter patent, First Circuit gave no deference to district court's infringement analysis, concluding that, under "legal

test for equivalence in patent cases," patentee could have believed there was infringement).[10]

---

[10] The Federal Circuit has sometimes used inconsistent language in this area. In *Medtronic Navigation, Inc. v. BrainLAB Medizinische Computersysteme GmbH*, 603 F.3d 943, 953-59 (Fed. Cir. 2010), for example, the Federal Circuit gave no deference to the district court's analysis and independently concluded that Medtronic had not taken unreasonable positions in going forward with its infringement claim, on the basis of which it concluded that the district court committed "clear error." But it is clear that the Federal Circuit did not give deference to any of the district court's legal conclusions. Indeed, it stated that "legal conclusions are reviewed without deference." *Id.* at 953. Further, while Amicus AIPLA asserts that many Federal Circuit cases acknowledge the factual nature of exceptionality, and thus justify deference to the district court on *every* aspect of *all* fee awards (AIPLA Br. 19-20), the cases it cites do not support this sweeping assertion. In *ICU Medical, Inc. v. Alaris Medical Systems, Inc.*, 558 F.3d 1368 (Fed. Cir. 2009), for example, the court expressly said it should review "the legal standard applied de novo." *Id.* at 1379 (citation omitted). And the court did not apply a clearly erroneous standard to the district court's objective-baselessness finding, but rather to its findings concerning "repeated misrepresentations" that the plaintiff made. *Id.* at 1380 (citation omitted). In *Computer Docking Station Corp. v. Dell, Inc.*, 519 F.3d 1366, 1380 (Fed. Cir. 2008), the court's offhand statement that "the district court's finding that the action was not objectively baseless was not clearly erroneous" was dicta lacking any support or analysis. And the other cases cited by the AIPLA simply pointed to the larger question of exceptionality and not to any legal conclusions that might underlie that question.

E. Historically, courts have treated reasonableness in negligence cases differently than in other contexts.

Highmark also relies on the factual nature of reasonableness determinations made in the negligence context, a comparison that the Federal Circuit dissents also made. Br. 39; P.A. 200a, 35a. But the comparison does not hold up.

This Court has long recognized that negligence cases do not follow the rule in most other types of cases that "where the facts are undisputed the effect of them is for the judgment of the court, and not for the decision of the jury," *R.R. Co. v. Stout*, 84 U.S. 657, 663 (1873). Negligence cases are treated differently because, historically, courts have deemed the question involved—did the defendant take "proper care"?—to best be answered by the collective wisdom of jurors, whose diversity of education and life experience will reflect the judgment of the community more accurately than a judge. *See id.* at 664 ("It is assumed that twelve men know more of the common affairs of life than does one man, that they can draw wiser and safer conclusions from admitted facts thus occurring than can a single judge."). In contrast, the education and experience of the typical lay juror is not sufficient to determine whether, on a given set of facts, a party's *legal* position was objectively reasonable. Thus, historically, this question has been reserved for the

court to handle as a legal issue. *See supra* pages 23-26.

F. The district court's ancillary exceptional-case findings cannot support Highmark.

Although it principally based its fee award on the allegedly frivolous nature of Allcare's claim-construction positions, the district court also relied on three ancillary instances of alleged misconduct: frivolous arguments regarding res judicata and collateral estoppel (P.A. 25a); shifting claim-construction positions on claim 52 (P.A. 27a); and misrepresentations to the Western District of Pennsylvania (P.A. 29a). But for each of these instances of alleged litigation misconduct, the Federal Circuit reversed the district court for *legal* errors.

The issue of whether Allcare's res-judicata and collateral-estoppel arguments amounted to misconduct involved no factual dispute, and thus required the same analysis as would any other allegation that a party took a frivolous legal position. What Highmark needed to show was that the argument was objectively baseless. And while the Federal Circuit characterized this issue as one of "misconduct," it analyzed the issue by considering the state of the law at the time (it said the law was "unsettled") and held that Allcare's argument was both reasonable when it was made and promptly withdrawn once the relevant facts were made known to Allcare. P.A. 25a-26a. This closely followed the

reasoning in *PRE*, where this Court relied on the "unsettled condition of the law" to hold that Columbia's suit was objectively reasonable. 508 U.S. at 64-65. Reaching its conclusion did not require the Federal Circuit to resolve any factual dispute.

The second instance of alleged misconduct—that Allcare had shifted its construction of claim 52—involved a determination of whether two legal positions were materially different. While Allcare modified the words of its construction, the Federal Circuit correctly held that Allcare consistently asserted that the claims should not be limited to the diagnostic-system embodiment, and thus maintained a consistent legal position. P.A. 28a. Since claim construction is an issue of law, the conclusion on this issue must itself be a legal conclusion.

Finally, the Federal Circuit held that attorneys' fees could not be sustained based on what the district court viewed as misrepresentations Allcare made to the Western District of Pennsylvania. P.A. 29a-30a. Again, whether the district court could impose sanctions for actions in a different tribunal is a purely legal question and required no deference. *See CJC Holdings, Inc. v. Wright & Lato, Inc.*, 989 F.2d 791, 793 (5th Cir. 1993) (citing *Cooter*, 496 U.S. 384); *FDIC v. Maxxam, Inc.*, 523 F.3d 566, 590 (5th Cir. 2008). Indeed, even under Highmark's view of objective baselessness, this is an "unalloyed" issue of law divorced from any factfinding and thus requiring no deference. Br. 39. The Federal Circuit recognized that both Fifth

Circuit and Supreme Court precedent counseled against sanctions on this ground, and properly refused to sustain a fee award on that basis. P.A. 30a.

In short, in reviewing the three alleged instances of misconduct relied on by the district court, the Federal Circuit questioned no facts found by the district court and instead reviewed only the district court's legal conclusions, finding them insufficient to support an exceptional-case determination.

G. The United States' amicus brief provides no reason to depart from de novo review.

In its amicus brief, the United States puts considerable weight not just on *Cooter* and *Pierce*, but on three cases that Highmark largely ignored—*Denton v. Hernandez*, 504 U.S. 25 (1992); *Christiansburg Garment Co. v. EEOC*, 434 U.S. 412 (1978); and *Chambers v. NASCO, Inc.*, 501 U.S. 32 (1991). But while the United States asserts that these cases all hold that appellate courts must deferentially review a district court's conclusions regarding the reasonableness of a party's legal arguments, it is wrong.

For example, the United States first asserts that, "[a]s *Denton* illustrates, the Court has equated discretion with deference even when the discretionary decision at issue requires the district court to assess the reasonableness of a party's legal

argument." U.S. Br. 17. *Denton* (unlike either *Christiansburg* or *Chambers*) dealt with the standard of review, but it involved the review of a claim that had been found to be *factually* frivolous, not *legally* frivolous. 504 U.S. at 32-33 (noting the standards that must be met to dismiss a claim "as factually frivolous"). Accordingly, while the *Denton* Court held that dismissal in that situation is reviewed deferentially, the decision did not concern the reasonableness of a *legal argument*, nor did the Court imply that its decision would apply in that context.

In fact, the Court implicitly contrasted the situation before it with that in *Boag v. MacDougall*, 454 U.S. 364, 365 n. (1982) (per curiam), describing *Boag* as "reversing dismissal of an *in forma pauperis* petition when dismissal was based on an erroneous legal conclusion and not exercise of the 'broad discretion' granted by § 1915(d)." *Denton*, 504 U.S. at 33. That is, while a decision that an argument is "factually frivolous" is reviewed deferentially, "an erroneous legal conclusion" must be reversed. Indeed, *Boag* shows that even in contexts where Congress has provided district courts with extraordinary discretion, a district court's legal errors are reviewed de novo. Specifically, the Seventh Circuit in *Boag* had affirmed the district court's legal-frivolousness determination on two grounds: (1) that "district courts have 'especially broad' discretion to dismiss frivolous actions against prison officials," and (2) that "petitioner's action is frivolous because it does not state a claim upon

which relief can be granted." *Boag*, 454 U.S. at 364-65. But this Court determined that it "need not address the permissible contours of the Court of Appeals' first conclusion [that district courts "have 'especially broad' discretion" in this context], for its second conclusion is erroneous as a matter of law." *Id.* at 365.

The United States correctly recognizes that *Christiansburg* involved a statute that allowed attorneys' fees to be awarded when a "plaintiff's legal claim was 'frivolous, unreasonable, or without foundation.'" U.S. Br. 18. But the United States then erroneously asserts that the *Christiansburg* Court "applied abuse-of-discretion rather than de novo review to the trial court's assessment of the reasonableness of the plaintiff's argument." *Id.*; *see also* Br. 8-9. The standard of review was not at issue in *Christiansburg*, which instead involved the question whether, in awarding attorneys' fees under Title VII, prevailing defendants were to be treated the same as prevailing plaintiffs. More specifically, the parties disputed whether bad faith was required to award fees to a prevailing defendant. 434 U.S. at 416-18. This Court held that "bad faith" should not be the only situation where a prevailing defendant would be able to recover fees, and that a district court also "may in its discretion award attorney's fees to a prevailing defendant in a Title VII case upon a finding that the plaintiff's action was frivolous, unreasonable, or without foundation, even though not brought in subjective bad faith." *Id.* at 421. Thus, while the Court referred to the district

court's discretion in awarding fees, its decision did not address how any underlying conclusions regarding baselessness should be reviewed.

Further, while *Christiansburg* said that, in denying fees, the district court "exercised its discretion squarely within the permissible bounds of [the statute]" (*id.* at 424), that statement does not support Highmark's position here. Specifically, the Court observed that the district court had declined to award fees to the defendant after finding that the EEOC's position "could not be characterized as unreasonable or meritless." *Id.* at 423. But again, the issue in *Christiansburg* was the legal criteria for awarding fees. *Id.* at 423-24. The Court gave no indication whatsoever that it was concerned with the standard of review, much less that it was saying that an appellate court should defer to the district court's view on the reasonableness of a party's *legal* position.

The United States also heavily relies on *Chambers*, asserting that in that case, "the Court applied the same standard when reviewing the imposition of sanctions, under the district court's inherent (and discretionary) equitable powers, where part of the misconduct consisted of the party's filing of 'frivolous' pleadings." U.S. Br. 18. In the first place, however, *Chambers* (like *Christiansburg*) did not even deal with the standard of review. Rather, the issue there was whether a district court can sanction a party for bad-faith conduct under its inherent authority, or must instead rely on a rule or

statute. *Chambers*, 501 U.S. at 35, 42. But even more importantly, that a pleading is labeled "frivolous" does not necessarily mean that it took an unsupported *legal* position. And in actuality, the pleadings in *Chambers* were found to be frivolous not because they took unsupported legal positions but because they "contained 'deliberate untruths and fabrications.'" *Id.* at 70 (Scalia, J., dissenting) (citation omitted).[11]

In short, nothing in *Denton*, *Christiansburg*, or *Chambers* supports Highmark's position regarding the standard of review that should be applied here. Indeed, the only one of these cases that Highmark even cites is *Chambers*, but Highmark cites it for a different proposition, which Allcare does not even contest. *See* Br. 38 (stating that this Court has deferentially reviewed "fee awards based on the district court's inherent authority").

H. The outcome of the *Octane* case will not change the result here.

Highmark asserts that if the Court in *Octane Fitness, LLC v. Icon Health & Fitness, Inc.*, No. 12-1184, jettisons the two-prong test it has applied to Section 285 cases, and instead says that the test that should be applied in the Section 285 context is a more open-ended "totality of the circumstances" test,

---

[11] The basis for identifying the pleadings involved in *Chambers* as "frivolous" is discussed only in Justice Scalia's dissent.

its position that the Section 285 determination should be reviewed with deference will not be affected, while Allcare's position would be weakened. Br. 34-37. But that is not true for several reasons.

Procedurally, Highmark never challenged the two-prong test, either in the district court or in the Federal Circuit. And in crafting the question for review in this case, Highmark included the objective-baselessness prong as an essential element. Thus, Highmark has waived any reliance on a different exceptional-case standard.

But Highmark is wrong substantively as well. According to Highmark, the only consideration that led the Court to apply de novo review was "that Section 285 has a 'threshold objective prong' that warrants its own, separate standard of review," so once an open-ended test is adopted, Allcare's basis for arguing that review should be de novo "would evaporate." Br. 36. This is wrong.

In particular, Highmark is wrong in arguing that the Federal Circuit only examined objective reasonableness because it viewed that issue as a distinct prong of the test required by *PRE*. On the contrary, the Federal Circuit has always reviewed *legal decisions* that are part of a determination of whether to award attorneys' fees under Section 285 de novo. *See supra* at 48-51. And here, whether under *PRE*'s two-prong test or an open-ended test, the question of whether Allcare was objectively reasonable in pressing its construction of claim 52 in the district court would remain the focus of the

decision whether to award fees under Section 285—and that question would remain a legal question subject to de novo review.

Moreover, Highmark is wrong in asserting that the other factors recognized in *Cooter* and *Pierce* as being relevant to deciding the appropriate standard of review would all "cut in favor of deferential review here." Br. 36. As discussed above, the Federal Circuit expressly noted that, wholly apart from *PRE*'s two-prong test, the policy considerations addressed in *Cooter* and *Pierce* (including which court is better suited to make the decision, the amount of money typically involved, etc.) compel de novo review of the legal decisions that are part of a Section 285 determination. *See supra* at 42-45.

Thus, whatever the result in *Octane*, it should have no bearing on the question in this case. The issue of objective reasonableness is an issue of law, and it should receive de novo review no matter whether it is an independent threshold step of a two-prong analysis or instead considered as part of an open-ended test.

I. Highmark cannot demonstrate any connection between the standard of review and the amount of baseless patent litigation.

Highmark argues that a de novo standard of review "emboldens" litigants to pursue baseless litigation. Br. 44.[12] But Highmark cannot support this assertion, despite laboring to portray cases brought by nonpracticing entities, or NPEs, as an unwarranted and universal drag on innovation.[13] Even accepting both that litigation is expensive and that NPEs account for some significant amount of

---

[12] Here, however, *Highmark* initiated this lawsuit by filing a declaratory-judgment action. P.A. 5a. In contrast, Allcare told Highmark that it preferred not to litigate. J.A. 549-50.

[13] Allcare, in addition, disputes the "troll" label. Allcare only began its licensing program after efforts to commercially develop the invention failed. J.A. 221-27, 454-57. Allcare's licensing activities, moreover, bear no resemblance to the abuses that are enumerated in the amici's briefs. AIPLA Br. 28-31; Apple Br. 15-18; Google Br. 19-21; Yahoo Br. 25. For instance, Allcare did not indiscriminately sue healthcare companies or their customers, nor can it be said that it tried to avoid testing the legitimacy of its assertions by forcing early "settlement, before reaching litigation on the merits . . . ." BCBS Br. 5. To the contrary, Allcare litigated its patent through summary judgment, *twice*: once successfully (in *Trigon*) and once unsuccessfully (here).

patent litigation,[14] Highmark's argument regarding the standard of review does not make sense.

Highmark argues that fee awards "ratchet" in favor of the plaintiff because appellate review gives a sanctioned party an easy way to reverse the award, but requires much more of a winning party to which fees were not awarded. Br. 48-49. By definition, whenever the standard of review is less deferential, the chances of changing the district court's decision are increased. But that universal truth also benefits parties whose fee requests have been rejected. Moreover, deferential review should not be adopted on the ground that it should be easier for winners (whether patentees or alleged infringers) to obtain their fees. Congress intended fees to be awarded only in exceptional cases, and as Highmark recognizes,

---

[14] As Highmark notes, at least one study has concluded that the perceived upswing of litigation in recent years has resulted from provisions in the America Invents Act ("AIA") (e.g., prohibiting the joinder of multiple defendants in single lawsuits) and not from NPEs engaging in bad practices. Christopher Cotropia et al., *Patent Assertion Entities (PAEs) Under the Microscope* (Illinois Public Law and Legal Theory Research Paper No. 14-17, 2013), *available at* http://papers.ssrn.com/sol3/papers.cfm?abstract_id=2346381; *see also* GAO Report to Congress, Intellectual Property: Assessing Factors That Affect Patent Infringement Litigation Could Help Improve Patent Quality, Introduction (Aug. 2013) (stating that the GAO's analysis of patent-infringement lawsuits from 2007 to 2011 "show[s] that companies that make products brought most of the lawsuits and that nonpracticing entities (NPE) brought about a fifth of all lawsuits").

these should be rare. Br. 25; *see also* S. Rep. No. 79-1503, at 2 (1946) ("It is not contemplated that the recovery of attorney's fees will become an ordinary thing in patent suits . . . .").

Many amici complain of a pro-patentee bias in the district courts when awarding fees pursuant to Section 285. *See, e.g.*, Yahoo! Br. 4-5, 17-19; Google Br. 16-18. But the statistics do not support that claim. The Institute for Intellectual Property & Information Law at the University of Houston Law Center ("IPIL") compiles results on various issues in reported district court and Federal Circuit cases.[15] According to IPIL's research, district courts are about as likely to require defendants to pay their opponents' fees as plaintiffs.[16] IPIL's research also

---

[15] Patstats: U.S. Patent Litigation Statistics, University of Houston Law Center (Jeffrey Johnson, ed.), http://patstats.org/Patstats3.html. In the numbers reported from patstats, Allcare has counted only the district court decisions and has only counted one outcome per case.

[16] 2010: patentees won 11 of 35 fee-award requests; accused infringers won 11 of 31 fee-award requests (http://patstats.org/2010_full_year.rev5.htm);
2011: patentees won 12 of 21 fee-award requests; accused infringers won 6 of 15 fee-award requests (http://patstats.org/2011_Full_Year_Report.html);
2012: patentees won 6 of 12 fee-award requests; accused infringers won 10 of 24 fee-award requests (http://patstats.org/2012_full_year_w._breakdown);
2013 (Q1-Q2): patentees won 2 of 5 fee-award requests; accused infringers won 4 of 10 fee-award requests (http://patstats.org/1Q_2013_posting.html; http://patstats.org/2Q2013_posting.html).

shows that Section 285 awards are rare, consistent with Congress's intention that fees would be awarded only in "exceptional" cases. But even if there were a bias in the district courts against defendants, as many amici allege, the appropriate solution would be to improve the consistency in patent-law decisions and reduce the overall number of bad decisions, which can be accomplished only through de novo review.[17]

Highmark is also wrong that de novo review weakens Section 285's deterrent effects. The Federal Circuit has shown that it is willing to sanction parties for baseless litigation even when a district court is not. In its recent *Kilopass* decision, for instance, the Federal Circuit vacated a district court's decision that refused to sanction the plaintiff for pursuing baseless litigation, remanding the case to the district court. 2013 WL 6800885, at *13-14.[18]

---

[17] Apple's amicus brief does not address the standard of review, but it does discuss a series of cases where, despite seemingly baseless allegations, the district court refused to award fees. Apple Br. 30-33. In those cases, of course, Apple's only recourse was to the Federal Circuit. These cases, therefore (to the extent that Apple's characterization of them is correct), show why a de novo standard of review can be an essential part of policing baseless patent cases.

[18] Although *Kilopass* dealt with the subjective "bad faith" prong of *PRE* rather than objective baselessness, the majority made several points that are worth noting, including that patentees and defendants should be treated the same way under Section 285. *See Kilopass*, 2013 WL 6800885, at *8 (equating the

Further, in *Raylon, LLC v. Complus Data Innovations, Inc.*, 700 F.3d 1361, 1367-68 (Fed. Cir. 2012), the Federal Circuit reversed a district court's decision not to award sanctions based on an allegedly frivolous claim construction. While *Raylon* considered the issue in the context of Rule 11, the court also remanded the exceptionality determination under Section 285 in light of its Rule 11 finding. *Id.* at 1370-71. And a concurring judge would have held that the patentee's claim construction was so unreasonable that it potentially allowed the district court to infer bad faith on the patentee's part. *Id.* at 1374 (Reyna, J., concurring).

Indeed, even in a case Highmark cites for the proposition that the Federal Circuit "favors trolls," the court affirmed the district court's conclusion that asserting infringement of two of the claims was frivolous. *Precision Links Inc. v. USA Prods. Grp., Inc.*, 527 F. App'x 852, 857 (Fed. Cir. 2013). The same is true in this case, where the Federal Circuit *affirmed* the district court's determination that Allcare's assertion of claim 102 was objectively baseless. Thus, the Federal Circuit has shown that it carefully considers each claim of frivolous litigation and will not simply blanket a case with determinations that favor patentees.

---

burdens on plaintiffs and defendants to recover fees under Section 285).

CONCLUSION

For the foregoing reasons, Allcare respectfully requests that this Court affirm the Federal Circuit's judgment.

Respectfully submitted,

ERIK R. PUKNYS
FINNEGAN, HENDERSON, FARABOW, GARRETT & DUNNER, LLP
3300 Hillview Avenue
Palo Alto, CA 94304
(650) 849-6600

DONALD R. DUNNER
Counsel of Record
DON O. BURLEY
JASON W. MELVIN
CORA R. HOLT
FINNEGAN, HENDERSON, FARABOW, GARRETT & DUNNER, LLP
901 New York Avenue, NW
Washington, DC 20001
(202) 408-4000

Counsel for Respondent, Allcare Health Management System, Inc.

January 2014

REPLY BRIEF

RECORD
AND
BRIEFS

Supreme Court, U.S.
FILED
FEB 10 2014
OFFICE OF THE CLERK

No. 12-1163

IN THE
Supreme Court of the United States

HIGHMARK INC.,
Petitioner,

v.

ALLCARE HEALTH MANAGEMENT SYSTEMS, INC.,
Respondent.

On Writ of Certiorari to the United States Court of Appeals for the Federal Circuit

REPLY BRIEF FOR PETITIONER

CYNTHIA E. KERNICK
JAMES C. MARTIN
THOMAS M. POHL
REED SMITH LLP
225 Fifth Avenue
Pittsburgh, PA 15222
(412) 288-3131

*Not admitted in DC; supervised by members of the firm

NEAL KUMAR KATYAL
Counsel of Record
DOMINIC F. PERELLA
DAVID M. GINN
AMANDA K. RICE*
JONATHAN D. SHAUB*
HOGAN LOVELLS US LLP
555 13th Street, NW
Washington, DC 20004
(202) 637-5600
neal.katyal@hoganlovells.com

Counsel for Petitioner

WILSON-EPES PRINTING CO., INC. – (202) 789-0096 – WASHINGTON, D. C. 20002

TABLE OF CONTENTS

Page

TABLE OF AUTHORITIES ii

INTRODUCTION 1

ARGUMENT 4

I. *PIERCE*, *COOTER*, THE STATUTORY TEXT, AND LONGSTANDING PRACTICE ALL REQUIRE UNITARY ABUSE-OF-DISCRETION REVIEW 4

A. *Pierce* And *Cooter* Control 4

B. Allcare Cannot Account For Section 285's Text Or Longstanding Appellate Practice 9

II. SECTION 285 BASELESSNESS FINDINGS ARE NOT PURE LEGAL ISSUES AND ARE NOT REVIEWED *DE NOVO* 13

A. Abuse-Of-Discretion Review Applies Across The Board 14

B. Objective Baselessness Is Not A Pure Question Of Law 14

C. This Case Demonstrates Why Deference Is Appropriate 17

III. ALLCARE'S REMAINING ARGUMENTS CANNOT WITHSTAND SCRUTINY 22

CONCLUSION 25

TABLE OF AUTHORITIES

Page

CASES:

Alyeska Pipeline Servs. Co. v. *Wilderness Soc'y*, 421 U.S. 240 (1975) 22

Apple, Inc. v. *Samsung Electronics Co.*, 877 F. Supp. 2d 838 (N.D. Cal. 2012) 17

BE&K Constr. Co. v. *NLRB*, 536 U.S. 516 (2002) 23

Blanc v. *Spartan Tool Co.*, 178 F.2d 104 (7th Cir. 1949) 11, 12

Brooktree Corp. v. *Advanced Micro Devices*, 977 F.2d 1555 (Fed. Cir. 1992) 16

Chambers v. *NASCO, Inc.*, 501 U.S. 32 (1991) 6

Christianburg Garment Co. v. *EEOC*, 434 U.S. 412 (1978) 5

Cooter & Gell v. *Hartmarx*, 496 U.S. 384 (1990) ..... passim

Denton v. *Hernandez*, 504 U.S. 25 (1992) 6

Depuy Spine, Inc. v. *Medtronic Sofamor Danek*, 567 F.3d 1314 (Fed. Cir. 2009) 12, 13

Eon-Net LP v. *Flagstar Bancorp*, 653 F.3d 1314 (Fed. Cir. 2011) 12

TABLE OF AUTHORITIES—Continued

Page

First Options of Chicago, Inc. v. *Kaplan*,
514 U.S. 938 (1995) 14

Fogerty v. *Fantasy*,
510 U.S. 517 (1994) 10

Fox v. *Vice*,
131 S. Ct. 2205 (2011) 6

Harkrader v. *Moore*,
44 Cal. 144 (1872) 4

Hensley v. *Eckerhart*,
461 U.S. 424 (1983) 6

Hughes Aircraft Co. v. *Messerschmitt-Boelkow-Blohm*,
625 F.2d 580 (5th Cir. 1980) 12

iLor, LLC v. *Google, Inc.*,
631 F.3d 1372 (Fed. Cir. 2011) 12, 13

Kilopass Technology, Inc. v. *Sidense Corp.*,
738 F.3d 1302 (Fed. Cir. 2013) 24

Koon v. *United States*,
518 U.S. 81 (1996) 9, 10, 14

Lighting Ballast Control LLC v. *Philips Electronics N. Am. Corp.*,
500 F. App'x 951 (2013) 22

Marbury v. *Madison*,
5 U.S. (1 Cranch) 137 (1803) 15

Markman v. *Westview Instruments, Inc.*,
517 U.S. 370 (1996) 18, 22

TABLE OF AUTHORITIES—Continued

Page

Medtronic Navigation, Inc., v. *BrainLAB Medizinische Computersysteme GmbH*, 603 F.3d 943 (Fed. Cir. 2010) 11

Mitchell v. *Forsyth*, 472 U.S. 511 (1985) 4

Oetiker v. *Jurid Werke GmbH*, 671 F.2d 596 (D.C. Cir. 1982) 12

Ornelas v. *United States*, 517 U.S. 690 (1996) 4, 7

Orrison v. *C. Hoffberger Co.*, 190 F.2d 787 (4th Cir. 1951). 11, 12

Pierce v. *Underwood*, 487 U.S. 552 (1988) ..... passim

Raylon, LLC v. *Complus Data Innovations*, 7C0 F.3d 1361 (Fed. Cir. 2012) 24

Retail Servs., Inc. v. *Freebies Publishing*, 364 F.3d 535 (4th Cir. 2004) 12

Securacomm Consulting, Inc. v. *Securacom, Inc.*, 224 F.3d 273 (3d Cir. 2000)..... 11

United States v. *Gaudin*, 515 U.S. 506 (1995) 6

United States v. *Regan*, 627 F.3d 1348 (10th Cir. 2010) 21

United States v. *Rivera*, 994 F.2d 942 (1st Cir. 1993)..... 15, 17

TABLE OF AUTHORITIES—Continued

Page

STATUTES:

35 U.S.C. § 70 ..... 10, 11

35 U.S.C. § 271(a) 17

35 U.S.C. § 285 ..... passim

RULE:

Fed. R. Civ. P. 54(d) 23

OTHER AUTHORITIES:

John Leubsdorf, *Toward a History of the American Rule on Attorney Fee Recovery*, 47 Law & Contemp. Probs. 9 (1984) 22, 23

W. Page Keeton et al., *Prosser & Keeton on Torts* (5th ed. 1984) 6

IN THE

Supreme Court of the United States

No. 12-1163

HIGHMARK INC.,

Petitioner,

v.

ALLCARE HEALTH MANAGEMENT SYSTEMS, INC.,

Respondent.

On Writ of Certiorari to the United States Court of Appeals for the Federal Circuit

REPLY BRIEF FOR PETITIONER

INTRODUCTION

Respondent Allcare advances two principal arguments before this Court. Neither has force.

1. Allcare hinges its lead argument on precedents involving "probable cause." Those precedents, it says, establish that the question whether a lawsuit was baseless is "an issue of law that is reviewed de novo." Br. 23. Allcare's position suffers from a fatal flaw: It proceeds as if this Court's decisions in *Pierce* v. *Underwood*, 487 U.S. 552 (1988), and *Cooter & Gell* v. *Hartmarx*, 496 U.S. 384 (1990), never happened. That will not do. Like this case, *Pierce* and *Cooter* involved "supervision of litigation," *Pierce*, 487 U.S. at 558 n.1, and even more specifically, fee proceedings. And they held that

appellate courts should apply "a unitary abuse of discretion standard *to all aspects*" of the district court's fee analysis, including whether a litigant's position was baseless. *Cooter*, 496 U.S. at 403 (emphasis added); *Pierce*, 487 U.S. at 560. Moreover, they recognized that the case for unitary abuse-of-discretion review is stronger still where statutory text or historic practice support it, *Pierce*, 487 U.S. at 558, and here both do—indeed, more obviously so than in *Pierce* and *Cooter* themselves.

In the face of this squarely applicable precedent, Allcare offers up its purported trump card: a collection of "probable cause" precedents that look nothing like this case. They do not involve supervision of litigation, or ancillary fee proceedings, or statutes that provide guidance on the standard of review. Allcare's reach to "probable cause" can achieve no purchase in the face of *Pierce* and *Cooter*.

2. Perhaps recognizing that it cannot escape *Pierce* and *Cooter*, Allcare tries to turn them to its advantage: It argues that those decisions recognize that appellate courts need not defer to district courts on pure issues of law. *E.g.*, Br. 3, 39. True enough—no one is disputing the black-letter proposition that an error of law is an abuse of discretion—but that does not help Allcare, for two reasons. First, to the extent Allcare is seeking bifurcated review, the argument is foreclosed: *Pierce* and *Cooter* accepted that appellate courts need not defer to a district court's purely legal pronouncements, and yet they still refused to slice and dice the standard of review into discretionary and *de novo* subcategories.

Second, if Allcare's argument is instead that baselessness is a pure question of law that should be

reviewed without deference even within a unitary abuse-of-discretion framework, that argument fares no better for a simple reason: The question whether litigation lacks foundation is *not* a pure question of law. *Pierce* says exactly that in the EAJA context, *see* 487 U.S. at 559, and the same is true of patent cases. As the United States observes, a district court's baselessness finding may (and often does) turn on many interrelated factual issues, including the patent-holder's failure to investigate; the timing of the parties' assertion, modification, and withdrawal of arguments; and "the district court's firsthand assessment of witness testimony." U.S. Br. 25.

Indeed, this case is Exhibit A. Allcare selectively cites the record to paint the picture that the baselessness finding here was all about construing one word in a patent claim. Br. 12-14, 26-28. The truth is far more complicated and fact-bound. The district court deemed Allcare's suit baseless after extended review of not just the patent claims, but also (1) the sufficiency of Allcare's pre-filing investigation, (2) the role of "ICD-9 codes," "CPT codes," and "authorization-request forms" in Highmark's computer system; (3) concessions Allcare's expert made in his reports and deposition, and their relevance; (4) the components of Highmark's system and when Allcare argued about them; (5) Allcare's position on infringement; and (6) whether Allcare's shifting arguments could be explained away as "wordsmithing," among other things. *Infra* 17-20. These issues focus on Allcare's litigation conduct, and they require intimate familiarity with the course of litigation. Moreover, even if a particular case looked less "factual," that

would make no difference. As in *Pierce*, the efficiencies that derive from abuse-of-discretion review justify a unitary standard for all cases. *See Pierce*, 487 U.S. at 563 ("the generality rather than the exception must form the basis for our rule").

A necessary premise of *both* of Allcare's arguments—that baselessness is a pure question of law—therefore fails. Allcare's remaining arguments are similarly meritless. The decision below should be reversed.

ARGUMENT

I. *PIERCE*, *COOTER*, THE STATUTORY TEXT, AND LONGSTANDING PRACTICE ALL REQUIRE UNITARY ABUSE-OF-DISCRETION REVIEW.

A. *Pierce* And *Cooter* Control.

1. Allcare spends the first fourteen pages of its argument citing cases from various areas of law—qualified immunity, malicious prosecution, criminal law—under the collective banner of "probable cause." Br. 23-36 (citing, *e.g.*, *Ornelas* v. *United States*, 517 U.S. 690 (1996); *Mitchell* v. *Forsyth*, 472 U.S. 511 (1985); and *Harkrader* v. *Moore*, 44 Cal. 144 (1872)). It says these probable-cause cases "establish[ ] that the question of whether a given set of facts justifies bringing suit" is "a pure question of law." *Id.* at 23-24 (citation omitted) And it says they establish that the question whether a lawsuit has any basis must be "reviewed *de novo* on appeal." *Id.* at 28 (citation omitted).

But there is a basic problem with these conclusions drawn from far-flung precedents: They cannot be squared with this Court's teachings in cases

addressing the *precise context at issue here*. In *Pierce* and *Cooter*, the Court addressed the standard of review for fee proceedings ancillary to the merits—in other words, cases like this one. The statutes there, like Section 285 as interpreted by the Federal Circuit, authorized fee awards for baseless lawsuits. *See Pierce*, 487 U.S. at 555 (fees available when lawsuit not "substantially justified"); *Cooter*, 496 U.S. at 392 (sanctions available when lawsuit not "well grounded in fact" and "warranted by existing law"). And there, as here, one side argued for *de novo* review. *See* U.S. Reply Br. 2 n.1, *Pierce*, 487 U.S. 552 (1988). But this Court did not hold that baselessness is a pure legal question, or that a district-court baselessness finding is reviewed *de novo*. It held exactly the opposite: It explained that in fee determinations, the question whether a lawsuit has any basis is a "mixed question[ ] of law and fact." *Pierce*, 487 U.S. at 559. And it held that "all aspects" of the district court's decision should be reviewed using "a unitary abuse of discretion standard." *Cooter*, 496 U.S. at 403; *accord Pierce*, 487 U.S. at 560. There is no daylight between this case and those.

Faced with these on-point precedents, Allcare pivots to cases that involve neither supervision of litigation nor fee disputes. But that difference in context is critical. *See* Yahoo Br. 31. This Court has explained that "[i]t is especially common for issues involving what can broadly be labeled 'supervision of litigation' * * * to be given abuse-of-discretion review." *Pierce*, 487 U.S. at 558 n.1.[1] Appeals from

[1] Cases the United States highlights provide further support for deference in litigation-supervision cases. U.S. Br. 17-18; *see Christianburg Garment Co.* v. *EEOC*, 434 U.S. 412, 421, 424

fee awards, in particular, are "one of the least socially productive types of litigation imaginable." *Hensley* v. *Eckerhart*, 461 U.S. 424, 442 (1983) (Brennan, J., concurring in part). Indeed, there may be no "sphere of judicial decisionmaking in which appellate micromanagement has less to recommend it." *Fox* v. *Vice*, 131 S. Ct. 2205, 2216 (2011). Courts thus have applied deference to fee-award decisions of every stripe. *See* Opening Br. 38.

These factors alone suffice to render Allcare's cases irrelevant. But there is more. First, Allcare's qualified-immunity cases (Br. 23-24) are mostly appeals from summary judgments. Because *all* summary judgments are reviewed *de novo*, these cases say nothing about the review standard in other contexts. Second, several of Allcare's cases concern allocation of authority between judges and juries, not trial and appellate courts. Resp. Br. 24-25, 52-53. These questions are entirely distinct. *See United States* v. *Gaudin*, 515 U.S. 506, 522 (1995). Third, probable cause in the malicious-prosecution context looks only at the moment prosecution is initiated. W. Page Keeton et al., *Prosser & Keeton on Torts* § 119, p. 876 (5th ed. 1984). That makes it much less fact-intensive than objective baselessness, which requires

---

(1978) (reviewing fee award for abuse of discretion); *Chambers* v. *NASCO*, 501 U.S. 32, 55 (1991) (same for sanctions decision); *Denton* v. *Hernandez*, 504 U.S. 25, 33 (1992) (same for "frivolousness" in *in forma pauperis* cases). Allcare tries to distinguish *Denton*, suggesting that its abuse-of-discretion holding applies only to factually frivolous claims and is consistent with *de novo* review of an "erroneous legal conclusion." Br. 56. But *Denton* specifically stated that "whether the court applied erroneous legal conclusions" is a factor to be considered in reviewing "*for abuse of discretion*." 504 U.S. at 34 (emphasis added).

consideration of the entire record. *See infra* 16. Finally, criminal probable cause implicates law-enforcement considerations inapplicable here. *See Ornelas*, 517 U.S. at 697, 699; Opening Br. 40.

2. Allcare accordingly must explain why it prevails under *Pierce* and *Cooter*. It cannot do so.

Putting aside statutory text and historic appellate practice—both discussed below—*Pierce* and *Cooter* offered a half-dozen reasons why unitary abuse-of-discretion review applied. Highmark's opening brief explained (Br. 16-23) why those considerations support unitary abuse-of-discretion review here too. Allcare simply ignores several of the considerations—among them lack of law-clarifying value, distortion of the appellate process, and discouraging collateral appeals. It apparently has no response.

Where Allcare does respond, its arguments are insubstantial. For example, *Pierce* explained that district courts are better-positioned to adjudge fee requests because "[n]ot infrequently, the question will turn upon not merely what was the law, but what was the evidence regarding the facts." 487 U.S. at 560. Allcare retorts that even if that is generally true, "it is not true here" for two reasons: First, the district judge in this case "appointed a special master," and second, Federal Circuit judges are more familiar than district judges with the "body of patent law." Br. 43-44.

That response fails on multiple levels. The special master's appointment hardly cancels out the district judge's long familiarity with the case; this case spent seven years on Judge Means' docket, and he wrote a

55-page fee opinion that revealed his deep understanding of what the litigants did and when they did it. Pet. App. 44a-96a; *infra* 17-20. In any event, the master's role in this particular litigation cannot drive the standard of review for all cases, *see Pierce*, 487 U.S. at 563, and it cannot be doubted that district judges *typically* are far more familiar with a litigation's travel than the appellate panel, *see* Opening Br. 16-19.

Nor does the Federal Circuit's familiarity with the "body of patent law," Resp. Br. 44, change matters. That is so, first of all, because the baselessness question often "will turn upon * * * what was the evidence regarding the facts." *Pierce*, 487 U.S. at 560. Allcare's contrary claim springs from its notion that baselessness is a pure legal question. As we demonstrate below, that is demonstrably wrong, both in general and in this case. *Infra* 14-22. Moreover, Allcare's argument about the Federal Circuit's patent-law expertise ignores the fact that the Circuit began operating in 1982; nothing suggests that its creation somehow modified Section 285, which has been in place since 1952. *See* Opening Br. 32.

Next, Allcare attempts to escape *Pierce*'s judicial-economy rationale, which it argues is an "unlikely concern" in patent cases because "cases litigated to judgment in the district court will usually be appealed" regardless. Br. 42. But that conflates *merits* appeals with *fee* appeals. Just because the appellate court must expend substantial resources on the former does not mean it should have to do so again on the latter.

Finally, Allcare tries to distinguish *Pierce* and *Cooter* by emphasizing the Federal Circuit's role. It

"is hard to imagine," Allcare says, "that anything could be more inconsistent with the very purpose of the Federal Circuit than requiring deference to district judges on matters of patent law." Br. 43. That argument rests on a misconception. Abuse-of-discretion review does *not* require appellate courts to defer to district judges' misstatements of law, *see Koon* v. *United States*, 518 U.S. 81, 100 (1996), and Highmark does not contend otherwise. What it *does* require is deference to district-court judgments about whether a litigant's case as a whole was baseless. *See infra* 13-17. And that is as it should be: Exceptional-case findings turn on "multifarious, fleeting, special, narrow facts" and "utterly resist generalization." *Pierce*, 487 U.S. at 561-62. An objective-baselessness finding in one case will have little relevance for the next; the patent, underlying facts, and litigation context will all be different. Thus the law-clarifying value of additional appellate scrutiny is minimal. Opening Br. 20-21. Paeans to patent-law uniformity are misplaced.[2]

B. Allcare Cannot Account For Section 285's Text Or Longstanding Appellate Practice.

Allcare's argument from probable-cause precedent fails for a second reason: It does not account for the governing statute or the history of appellate review of patent-fee awards. *Pierce*, 487 U.S. at 558. Both require abuse-of-discretion review here.

---

[2] Allcare also points to dictum in *Pierce* suggesting higher monetary stakes favor plenary review. Highmark has answered that point. Opening Br. 33-34. Allcare's *amicus*, meanwhile, says deferential review encourages forum-shopping. BSA Br. 6-10. But litigants inclined to forum-shop presumably will seek the jurisdiction where they are most likely to win on the *merits*.

1. Highmark has explained that the text of Section 285, and in particular its key words—"may" and "exceptional"—imbue district courts with discretion. Opening Br. 15, 25-28 (citing *Fogerty* v. *Fantasy, Inc.*, 510 U.S. 517, 533 (1994); *Koon*, 518 U.S. at 98-99)). Highmark likewise demonstrated that Section 285's predecessor, Section 70, explicitly vested discretion in district courts; that appellate courts reviewed findings under Section 70 for abuse of discretion; and that Section 285 was designed to recodify Section 70 without change. *Id.* at 26-27; U.S. Br. 12-16. Section 285 thus amounts to a "relatively explicit statutory command" for abuse-of-discretion review. *Pierce*, 487 U.S. at 558. After all, when a statute "commits a decision to the discretion of the district court, that decision is reviewed on appeal for abuse of discretion." U.S. Br. 16.

Allcare's rejoinders are weak. First, Allcare tries to focus on what the statute does *not* say: It does not use the words "the court finds," unlike the EAJA statute in *Pierce*. Br. 38. But there is more than one way to convey discretion; every statute need not use the EAJA's phrasing. And using words like "exceptional" and "may" are two of those ways. Opening Br. 15, 25-28.

Second, Allcare tries to explain away the early patent-fee appellate decisions—which uniformly reviewed for abuse of discretion—by noting that they recited "the long-recognized principle that, by definition, a court abuses its discretion when its decision is based on an erroneous legal conclusion." Br. 39. Allcare's attempt to score points on this undisputed principle defies logic. Yes, patent-fee cases have recognized that a pure legal error is an abuse of discretion—as has this Court, including in

Cooter and *Koon*. But they *still applied unitary abuse-of-discretion review*. *See* Opening Br. 26-27; *see also, e.g.*, *Blanc* v. *Spartan Tool Co.*, 178 F.2d 104, 105 (7th Cir. 1949); *Orrison* v. *C. Hoffberger Co.*, 190 F.2d 787, 791 (4th Cir. 1951). Given that fact, Allcare's admission that "Section 285 should be interpreted by the courts the same way Section 70 had been," Br. 39, further undercuts its already implausible case.

2. Highmark also demonstrated a related point in the opening brief: A "history of appellate practice," *Pierce*, 487 U.S. at 558, under Section 285 and the Lanham Act favors unitary abuse-of-discretion review. Allcare's rejoinders are meritless.

First, Allcare argues that historic appellate practice cuts the other way because in *probable-cause* cases, baselessness is "ultimately a legal question." Br. 23, 36. Those cases are inapposite. *See supra* 5-7.

Second, Allcare says Highmark's cited cases hold only that "the ultimate decision whether to award fees"—rather than the exceptionality or baselessness finding—is committed to district-court discretion. Br. 21. That is demonstrably wrong. Appellate courts have long applied deferential review to district courts' exceptionality and baselessness findings, not just to the decision to award fees. *See, e.g.*, *Medtronic Navigation, Inc.* v. *BrainLAB Medizinische Computersysteme GmbH*, 603 F.3d 943, 953 (Fed. Cir. 2010) (asking whether trial court "committed clear error in holding the case exceptional"); *Securacomm Consulting, Inc.* v. *Securacom Inc.*, 224 F.3d 273, 279 (3d Cir. 2000) (reviewing Lanham Act exceptional-case finding "for

abuse of discretion"); *Oetiker* v. *Jurid Werke GmbH*, 671 F.2d 596 (D.C. Cir. 1982) (same under Section 285); *Retail Servs., Inc.* v. *Freebies Publishing*, 364 F.3d 535, 551 (4th Cir. 2004) (holding in Lanham Act case that district court did not "abuse[] its discretion" in finding claim "objectively untenable"); *Hughes Aircraft Co.* v. *Messerschmitt-Boelkow-Blohm*, 625 F.2d 580, 585 (5th Cir. 1980) (deferential review of finding that claims were not "clearly meritless" or "frivolous"); *Blanc*, 178 F.2d at 105; *Orrison*, 190 F.2d at 791; Opening Br. 29-31, U.S. Br. 19-20 & nn.11-12; Pet. App. 34a.

Finally, Allcare reprises the argument it made regarding the pre-Section 285 precedents: It says the cases in this area "have consistently stated the rule that legal questions are reviewed without deference." Br. 48-49. True—but as the many cases just cited demonstrate, they still have given deference to the conclusion that litigation was baseless. Indeed, Allcare's own parentheticals confirm the point; they state that the overarching standard is "abuse of discretion." *Id.* at 49.

That is so in the Federal Circuit, just as in other circuits. *See, e.g.*, *Eon-Net LP* v. *Flagstar Bancorp*, 653 F.3d 1314, 1326 (Fed. Cir. 2011). Allcare carefully chooses parentheticals from *Depuy Spine, Inc.* v. *Medtronic Sofamor Danek*, 567 F.3d 1314 (Fed. Cir. 2009), and *iLor, LLC* v. *Google, Inc.*, 631 F.3d 1372 (Fed. Cir. 2011), to suggest that the Federal Circuit failed in those cases to apply deferential review to baselessness determinations. Not so. In the *DePuy* excerpt Allcare quotes, the court merely recited the black-letter rule—found in practically every judicial opinion—that the court reviews "underlying factual findings for clear error

and legal conclusions without deference." 567 F.3d at 1329. The court did not characterize the objective-baselessness finding as a question of law. And in *iLor*, the court overturned an objective-baselessness finding after concluding that "the district court *committed clear error*." 631 F.3d at 1379-80 (emphasis added).

Allcare brushes away this history of deference by calling it "dicta" and asking this Court to rely on inferences that "may not be explicitly stated." Br. 49-51 & n.10. This Court should decline the invitation.

II. SECTION 285 BASELESSNESS FINDINGS ARE NOT PURE LEGAL ISSUES AND ARE NOT REVIEWED *DE NOVO*.

Perhaps recognizing it cannot escape *Pierce* and *Cooter*, Allcare also tries to argue within their confines: It contends that even those decisions recognize that pure questions of law are reviewed without deference. And it argues that it prevails under that principle because objective baselessness is a pure question of law. *E.g.*, Br. 3, 39.

This line of argument leads nowhere. *Pierce* and *Cooter* accepted the principle to which Allcare adverts and still refused to bifurcate the standard of review for baselessness determinations. Moreover, the baselessness of a party's position is *not* a pure question of law. On the contrary, in the mine-run of cases—and in this case itself—baselessness is deeply intertwined with the facts and history of the case. Allcare cannot change that reality simply by calling baselessness a "question of law."

A. Abuse-Of-Discretion Review Applies Across The Board.

Allcare contends that legal questions embedded within the district court's fee-shifting decision must be reviewed *de novo*. Br. 3. To the extent Allcare is arguing for a bifurcated review standard, that argument is foreclosed. *Pierce*, *Cooter*, and other cases have squarely rejected a divided standard, with parts "labeled *de novo* while other parts are labeled an abuse of discretion." *Koon*, 518 U.S. at 100; *Pierce*, 487 U.S. at 560; *Cooter*, 496 U.S. at 405. As in those cases, it is not necessary here to "make the law more complicated by proliferating review standards without good reasons." *First Options of Chicago, Inc.* v. *Kaplan*, 514 U.S. 938, 948 (1995).

This does not mean "a mistake of law is beyond appellate correction." *Koon*, 518 U.S. at 100. As Highmark's opening brief noted (at 24), proper application of a unitary abuse-of-discretion standard "includes review to determine that the discretion was not guided by erroneous legal conclusions." *Id.*; *see Cooter*, 496 U.S. at 405; U.S. Br. 28-31. Highmark agrees with the Solicitor General that abuse-of-discretion review "does not entail deference to a court's pure legal error." U.S. Br. 28. That lack of deference, however, applies only to pure questions of law such as statutory interpretation. Baselessness, as we next explain, is not such a question.

B. Objective Baselessness Is Not A Pure Question Of Law.

Allcare's argument about pure legal error could be understood to accept the unitary abuse-of-discretion standard and argue that, even under that standard,

objective baselessness must be reviewed without deference because it is a pure question of law. If that is Allcare's argument, the premise is wrong: Objective baselessness is *not* a pure question of law.

1. "Pure" legal questions generally involve "interpreting a set of words," like the Constitution or a statute. *United States* v. *Rivera*, 994 F.2d 942, 951 (1st Cir. 1993) (Breyer, J.). When courts perform that function, they are expounding the meaning of the text in the abstract, for all cases. They are "say[ing] what the law is." *Marbury* v. *Madison*, 5 U.S. (1 Cranch) 137, 177 (1803).

Determining whether an argument is reasonable (or baseless) is categorically different. The court must review the party's unique argument and assess its *plausibility* in light of all the circumstances. That task is heavily contextual; and the conclusion that a particular argument was (or was not) reasonable at a given moment has no enduring meaning or value beyond that case. Although pure legal questions may sometimes bear on the reasonableness inquiry, reasonableness itself is not such a pure question.

Pierce stands for that very proposition. There, the Court announced the unitary abuse-of-discretion review standard, 487 U.S. at 560, and then went on to analyze the "merits of the Government's litigating position" under that standard, *id.* at 569. It set forth, in several paragraphs, the government's legal arguments and the opposing party's rejoinders. And it concluded: "We cannot say that this description *commands the conclusion* that the Government's position was substantially justified. Accordingly, we affirm the Ninth Circuit's holding that *the District Judge did not abuse his discretion* when he found it

was not." *Id.* at 570-71 (emphases added). That analysis tracks perfectly on the approach of Highmark and the United States here. And it cannot be reconciled with Allcare's insistence that baselessness is a pure legal question reviewed *de novo*.

2. Moreover, in actual practice objective baselessness is miles removed from a pure question of law; it is, by nature, an intensely fact-bound inquiry. To determine whether a party's case is baseless, a court must review the "full record," Pet. App. 12a-13a, and conduct a "retrospective assessment of the merits of the *entire litigation*," *id.* 9a n.1 (emphasis added). The question is not only whether a party had a reasonable basis for filing its claims, but also whether it had a reasonable basis for *continuing to press* them as new facts come to light, issues are narrowed, and the law comes into sharper focus. *Id.* 12a. Needless to say, a court assessing the merits of an entire patent lawsuit faces a daunting task.

Allcare suggests all the relevant facts will be easy to ascertain because they are "reflected in the record." Br. 26. That is not necessarily true. Important facts disclosed at discovery conferences, settlement conferences, and hearings may never have been memorialized in the written record. *See Pierce*, 487 U.S. at 560; *Brooktree Corp.* v. *Advanced Micro Devices*, 977 F.2d 1555, 1582 (Fed. Cir. 1992). And even if most of the raw facts are in the record *somewhere*, it is by no means easy for an appellate judge to comb through, pick them out, and organize them into a coherent account of the parties' evolving positions. The record in this relatively simple case,

for example, spans more than 650 docket entries (J.A. 33), many containing hundreds of pages of written materials. Other patent lawsuits are far more complicated. *See Apple, Inc.* v. *Samsung Electronics Co.*, 877 F. Supp. 2d 838, 854 (N.D. Cal. 2012).

The district court's experience and "'superior feel for the case,'" *Rivera*, 994 F.2d at 952, give it an unmatched ability to make sense of this enormous mélange of facts. It can pinpoint the parties' arguments; track those arguments' evolution over the course of litigation; and determine whether they were reasonable in light of then-applicable law and facts known to the parties. The temporal element is particularly important. A position that initially seems reasonable may become unreasonable as the "full record" develops. Pet. App. 12a-13a. District judges familiar with the case's progress will appreciate these subtleties when they assess "the merits of the entire litigation." *Id.* 12a.

C. This Case Demonstrates Why Deference Is Appropriate.

This case illustrates the broad range of facts that come into play during the exceptional-case inquiry. Because it underscores the nuances of such an inquiry—and the ways in which the appellate court can easily get it wrong—it is worth recounting in detail.

1. Allcare's infringement counterclaim required it to prove that Highmark made, used, or sold the invention described in the '105 patent. 35 U.S.C. § 271(a). The infringement determination unfolded in two phases. First, the district court appointed a special master to interpret some of the patent's non-

self-explanatory words. The special master reviewed the parties' lengthy filings, held a nine-hour hearing, and issued a claim-construction report in 2006. J.A. 236-313.

Allcare suggests that this case amounted to a simple dispute about a word in claim 52(c) of the patent. Br. 28. But Allcare neglects to mention that the parties *stipulated* to constructions of all the key terms in that claim. J.A. 298-99. There was no dispute about what the words in the claim meant. Although the parties argued over whether the claim covered particular embodiments of the invention—a "diagnostic smart system" versus a "utilization review smart system"—the special master rejected the notion that this dispute was a proper subject of claim construction. He concluded that the relevant issue was whether Highmark's *actual system* was "covered by element 52(c)," not whether the general concept of a "utilization-review smart system" was covered. J.A. 300. And that issue was "an infringement issue for the trier of fact, not a claim construction issue." *Id.*

The case's focus thus shifted to the fact-intensive question of infringement—whether the "patent claim 'cover[ed] the alleged infringer's product or process.' " *Markman* v. *Westview Instruments, Inc.*, 517 U.S. 370, 374 (1996). Highmark filed a summary-judgment motion describing its computer system in great detail and included over 1,200 pages of exhibits. Dist. Ct. Dkt. 402. Allcare, in turn, filed a lengthy appendix attempting to rebut Highmark's factual contentions. *See* Dist. Ct. Dkt. 435-442.

Highmark argued, among other things, a crucial factual point: that its system did not infringe because

it did not involve entry of "data symbolic of patient systems for tentatively identifying a proposed mode of treatment." S.A. 21; Dist. Ct. Dkt. 402-1, at 30-34. In debating that question, the parties sparred over the role of "ICD-9 codes," "CPT codes," and "authorization-request forms" in Highmark's system. J.A. 383-88. Allcare had great difficulty explaining what part of Highmark's system identified a proposed mode of treatment. (No surprise there, since Highmark's system was designed to process insurance claims, not to treat patients.) Allcare initially contended that the ICD-9 codes corresponded to the "proposed mode of treatment," but later changed tack and argued that the authorization-request form was the proposed treatment. J.A. 386. The special master ultimately found both suggestions meritless. Relying in part on testimony from Allcare's own expert, the master concluded that no reasonable jury could find that the various codes and forms functioned as proposed treatments. J.A. 387-88.

As this recitation makes clear, claim construction was not the "principal noninfringement issue" in the district court. Resp. Br. 6. The principal issue was whether Highmark's system contained the elements described in claim 52(c). And the district court held that Allcare should have known from the outset that Highmark's system did not contain those elements. Pet. App. 72a-74a, 90a-92a. Thus one reason for the exceptional-case finding was that Allcare "persisted in its infringement allegations" even after its own expert conceded that the various codes and forms were not used as Allcare claimed. Pet. App. 78a. These are precisely the sorts of factual details district judges are best-positioned to assess.

2. Other aspects of the litigation confirm the heavily factual nature of the district court's exceptional-case finding. The court catalogued a "pattern of conduct" that justified imposition of fees. Pet. App. 90a. For example, it found Allcare's pre-filing investigation seriously deficient. *Id.* 51a-69a. And it rejected Allcare's contention that the denial of summary judgment in a separate suit against Trigon Healthcare gave Allcare reason to believe its claims against Highmark were viable. *Id.* 63a, 71a.

Indeed, Allcare's continued insistence that the *Trigon* summary-judgment ruling justified its counterclaims is a perfect example of why the reasonableness inquiry should be entrusted to district courts. Allcare thinks it was reasonable to rely on *Trigon* because the decision was on all fours with this case. But Allcare obscures several critical distinctions between the cases. Allcare pursued a different claim-construction theory in each case. *Compare* J.A. 280, 299 (parties stipulated to definition of critical word "for" in claim 52(c)), *with* J.A. 648 (*Trigon* court used a different definition). Moreover, Allcare made no effort to show that the two cases were factually identical. Pet. App. 63a, 71a. On inspection, *Trigon* did not support Allcare's position. *See* Pet. App. 63a.

3. The Federal Circuit swept aside all this factual nuance (and the district court's exhaustive analysis) in two terse paragraphs, holding that Allcare *could have* made a different argument at the claim-construction stage that *would have* been plausible. Pet. App. 20a-22a. But Allcare did not *actually make*

that argument. *Id.* 21a & n.5.[3] And that is what should matter. Whatever else it means to apply abuse-of-discretion review, it surely must mean the district court cannot be reversed based on arguments the parties did not even raise below. *See United States* v. *Regan*, 627 F.3d 1348, 1354 (10th Cir. 2010) ("[W]e cannot hold that the district court abused its discretion by failing to consider an argument that [the litigant] did not raise.").

4. Allcare never explains why appellate courts should spend their time second-guessing fact-bound judgments about parties' litigation strategy in collateral fee appeals. Instead, Allcare tries to dodge the issue by reinventing this case as a simple claim-construction dispute. Br. 18-19, 26-28. Because claim construction is (in Allcare's view) a "question of law," it supposedly follows that "the reasonableness of a litigant's claim construction position, involving no disputed facts, is itself a question of law," reviewed without deference. *Id.* 18-19.

Allcare is mistaken for several reasons:

1. Allcare has the facts wrong. This case was principally about infringement, not the stipulated claim construction. *See supra* 17-20.

2. Even in a rare case that did turn exclusively on claim construction, the standard of review for

---

[3] Allcare weakly suggests it did make this argument in the district court. Br. 7 n.2. But its cites are to the special master's claim-construction report, not its own briefs. *See* J.A. 286, 300. And they reveal that Allcare argued that claim 52(c)'s language covers utilization-review smart systems, not that claim 52(c) should be interpreted in light of the portion of the patent specification relied upon by the panel majority.

objective baselessness would remain the same—abuse of discretion. *See Pierce*, 487 U.S. at 563.

3. Claim construction itself may not be a pure question of law. *See Markman*, 517 U.S. at 388 (claim construction "falls somewhere between a pristine legal standard and a simple historical fact"). The en banc Federal Circuit is currently considering this issue in *Lighting Ballast Control LLC* v. *Philips Electronics N. Am. Corp.*, 500 F. App'x 951 (2013).

4. Even assuming claim construction is a purely legal question, it does not follow that the *reasonableness* of a proposed claim construction is also purely legal. It is not. *Supra* 14-17.

In the end, this case simply confirms the broader point, recognized in *Pierce* and *Cooter*: Objective baselessness is a fact-heavy inquiry, not a pure question of law. A district court's baselessness finding in a fee case merits deference on appeal.

III. ALLCARE'S REMAINING ARGUMENTS CANNOT WITHSTAND SCRUTINY.

1. In a last-ditch effort to justify *de novo* review, Allcare attempts to turn attorney's fees into a constitutional question. Br. 45-48. But the Constitution simply has nothing to say about fees.

English courts have been awarding fees to prevailing defendants since 1607. *Alyeska Pipeline Servs. Co.* v. *Wilderness Soc'y*, 421 U.S. 240, 247 n.18 (1975). The colonies borrowed this practice, and many state and federal courts continued it for decades. *Id.* at 345-51; John Leubsdorf, *Toward a History of the American Rule on Attorney Fee*

Recovery, 47 Law & Contemp. Probs. 9, 10-13 (1984). It was not until the mid- to late-19th Century that most courts abandoned the "loser-pays" policy. Leubsdorf at 20-27. And even now, courts regularly award costs other than fees to prevailing defendants. *E.g.*, Fed. R. Civ. P. 54(d).

No court has ever suggested that this deeply-rooted practice burdens First Amendment rights. Quite the contrary, in *BE&K Construction Co.* v. *NLRB*, this Court emphasized that its First Amendment holding should not be "read to question" the validity of "statutory provisions that merely authorize the imposition of attorney's fees on a losing plaintiff." 536 U.S. 516, 537 (2002). If an across-the-board fee provision does not burden First Amendment rights, a rule applicable only to baseless suits does not either.

2. Allcare does not dispute the multi-billion-dollar economic drag of abusive patent litigation. Nor does it dispute that these costs are disproportionately borne by innovators facing extortionate suits by trolls. *See* Blue Cross Br. 20-23; Apple Br. 9-14.

A deferential review standard will not solve these problems. But it can make a difference in cases, such as this one, where protracted, meritless infringement litigation has burdened the courts and the alleged infringer for years. *De novo* review gives patent trolls a second bite at the apple. That chance to re-litigate is an incentive to fight on, even in the face of clear defeat at every turn.

Allcare contests the proposition that *de novo* review functions as a one-way ratchet against fees. Br. 63. But it cannot cite a single case in which the Federal Circuit overruled a district court and declared a case

exceptional on its own. To our knowledge, there are none. Allcare points to *Kilopass Technology, Inc.* v. *Sidense Corp.*, 738 F.3d 1302, 1317-18 (Fed. Cir. 2013), but there—as Allcare sheepishly admits, Br. 65 n.18—the Federal Circuit merely held that the district court erroneously articulated the substantive standard for *bad faith* (not baselessness) and remanded for re-evaluation under the correct standard. Contrary to Allcare's suggestion (Br. 65), it did not independently "sanction" the party for "baseless litigation" in the face of a district-court fee denial. *See also Raylon, LLC* v. *Complus Data Innovations, Inc.*, 700 F.3d 1361 (Fed. Cir. 2012) (Federal Circuit unwilling to declare case exceptional under Section 285 even after finding litigant's claim-construction position unreasonable under Rule 11).

In the end, abuse-of-discretion review reinforces Section 285's deterrent effect, which functions best when parties know the district court wields substantial discretion to shift fees. *See Cooter*, 496 U.S. at 404; AIPLA Br. 29-30. That, in turn, protects the incentive to innovate at the heart of the Patent Act.

CONCLUSION

The Federal Circuit's judgment should be reversed.

Respectfully submitted,

CYNTHIA E. KERNICK
JAMES C. MARTIN
THOMAS M. POHL
REED SMITH LLP
225 Fifth Avenue
Pittsburgh, PA 15222
(412) 288-3131

*Not admitted in DC; supervised by members of the firm

NEAL KUMAR KATYAL
Counsel of Record
DOMINIC F. PERELLA
DAVID M. GINN
AMANDA K. RICE*
JONATHAN D. SHAUB*
HOGAN LOVELLS US LLP
555 13th Street, NW
Washington, DC 20004
(202) 637-5600
neal.katyal@hoganlovells.com

FEBRUARY 2014

AMICUS CURIAE BRIEF

No. 12-1163

In the Supreme Court of the United States

HIGHMARK INC., PETITIONER

v.

ALLCARE HEALTH MANAGEMENT SYSTEMS, INC.

ON WRIT OF CERTIORARI
TO THE UNITED STATES COURT OF APPEALS
FOR THE FEDERAL CIRCUIT

BRIEF FOR THE UNITED STATES
AS AMICUS CURIAE SUPPORTING PETITIONER

DONALD B. VERRILLI, JR.
Solicitor General
Counsel of Record
STUART F. DELERY
Assistant Attorney General
MALCOLM L. STEWART
Deputy Solicitor General
ROMAN MARTINEZ
Assistant to the Solicitor General
SCOTT R. MCINTOSH
MICHAEL E. ROBINSON
Attorneys
Department of Justice
Washington, D.C. 20530-0001
SupremeCtBriefs@usdoj.gov
(202) 514-2217

NATHAN K. KELLEY
Solicitor and Deputy General Counsel
JAMIE L. SIMPSON
JOSEPH MATAL
LORE A. UNT
Associate Solicitors
United States Patent and Trademark Office
Alexandria, Va. 22313

QUESTION PRESENTED

Section 285 of the Patent Act provides that "[t]he court in exceptional cases may award reasonable attorney fees to the prevailing party." 35 U.S.C. 285. The question presented is as follows:

Whether a district court's determination that a party's litigating position is objectively baseless for purposes of Section 285 is subject to de novo review on appeal.

TABLE OF CONTENTS

Page

Interest of the United States 1
Statement 2
Summary of argument 8
Argument 10
I. Section 285 fee awards are subject to a unitary abuse-of-discretion standard of review on appeal 11
A. Section 285 grants district courts discretionary authority over fee awards 11
B. There is a longstanding historical tradition of reviewing Section 285 awards deferentially on appeal 19
C. The sound administration of justice favors an abuse-of-discretion standard 21
II. A unitary abuse-of-discretion standard will not preclude correction of pure legal error 28
III. The Federal Circuit's analysis is flawed, and the case should be remanded 31
Conclusion 34

TABLE OF AUTHORITIES

Cases:

Algren Watch Findings Co. v. *Kalinsky*, 197 F.2d 69 (2d Cir. 1952) 13, 15
American Safety Table Co. v. *Schreiber*, 415 F.2d 373 (2d Cir. 1969), cert. denied, 396 U.S. 1038 (1970) 19
Bard Peripheral Vascular, Inc. v. *W.L. Gore & Assocs., Inc.*, 682 F.3d 1003 (Fed. Cir. 2012), cert. denied, 133 S. Ct. 932 (2013) 6, 25
Blanc v. *Spartan Tool Co.*:
168 F.2d 296 (7th Cir.), cert. denied, 335 U.S. 853 (1948) 14
178 F.2d 104 (7th Cir. 1949) 13

Cases—Continued: Page

Blue v. *United States Dep't of the Army*, 914 F.2d 525 (4th Cir. 1990), cert. denied, 499 U.S. 959 (1991) 18

Bolt, Beranek & Newman, Inc. v. *McDonnell Douglas Corp.*, 521 F.2d 338 (8th Cir. 1975), cert. denied, 423 U.S. 1073 (1976).....20

Brooks Furniture Mfg., Inc. v. *Dutailier Int'l, Inc.*, 393 F.3d 1378 (Fed. Cir. 2005).....3

CTS Corp. v. *Piher Intern. Corp.*, 727 F.2d 1550 (Fed. Cir.), cert. denied, 469 U.S. 871 (1984).....21

Chambers v. *NASCO, Inc.*, 501 U.S. 32 (1991).....18, 29

Christiansburg Garment Co. v. *EEOC*, 434 U.S. 412 (1978).....8, 18, 29

Cooter & Gell v. *Hartmarx Corp.*, 496 U.S. 384 (1990).....*passim*

Cybor Corp. v. *FAS Techs., Inc.*, 138 F.3d 1448 (Fed. Cir. 1998).....30

Denton v. *Hernandez*, 504 U.S. 25 (1992).....17, 29

Digeo, Inc. v. *Audible, Inc.*, 505 F.3d 1362 (Fed. Cir. 2007).....20

Dixie Cup Co. v. *Paper Container Mfg. Co.*, 174 F.2d 834 (7th Cir.), cert. denied, 338 U.S. 867 (1949).....13, 15

Dubil v. *Rayford Camp & Co.*, 184 F.2d 899 (9th Cir. 1950).....13, 15

Eichman v. *Linden & Sons, Inc.*, 752 F.2d 1246 (7th Cir. 1985).....18

Eon-Net LP v. *Flagstar Bancorp*, 653 F.3d 1314 (Fed. Cir. 2011), cert. denied, 132 S. Ct. 2391 (2012).....20

Fogerty v. *Fantasy, Inc.*, 510 U.S. 517 (1994).....12

Garner v. *Cuyahoga Cnty. Juvenile Court*, 554 F.3d 624 (6th Cir. 2009).....18

Garrett Corp. v. *American Safety Flight Sys., Inc.*, 502 F.2d 9 (5th Cir. 1974).....20

Cases—Continued: Page

General Motors Corp. v. *Devex Corp.*, 461 U.S. 648 (1983) 3, 15
Haynes Int'l, Inc. v. *Jessop Steel Co.*, 8 F.3d 1573 (Fed. Cir. 1993) 20
Hensley v. *Eckerhart*, 461 U.S. 424 (1983) 23, 27
Hughes Aircraft Co. v. *Messerschmitt-Boelkow-Blohm, GmbH*, 625 F.2d 580 (5th Cir. 1980), cert. denied, 449 U.S. 1082 (1981) 19, 20
iLOR, LLC v. *Google, Inc.*, 631 F.3d 1372 (Fed. Cir. 2011) 3, 6
J.P. Stevens Co. v. *Lex Tex Ltd.*, 822 F.2d 1047 (Fed. Cir. 1987) 21
Kearney & Trecker Corp. v. *Cincinnati Milacron Inc* , 562 F.2d 365 (6th Cir. 1977) 20
Koon v. *United States*, 518 U.S. 81 (1996) 10, 28, 29
Lam, Inc. v. *Johns-Manville Corp.*, 668 F.2d 462 (10th Cir.), cert. denied, 456 U.S. 1007 (1982) 20
Laufenberg, Inc. v. *Goldblatt Bros., Inc.*, 187 F.2d 823 (7th Cir. 1951) 14
LeBlanc-Sternberg v. *Fletcher*, 143 F.3d 765 (2d Cir. 1998) 18
Lighting Ballast Control LLC v. *Philips Elecs. N. Am. Corp.*, 500 Fed. Appx. 951 (Fed. Cir. 2013) 30
Lincoln Elec. Co. v. *Linde Air Prods. Co.*, 74 F. Supp. 293 (N.D. Ohio 1947) 13, 14
Loctite Corp. v. *Fel-Pro, Inc.*, 667 F.2d 577 (7th Cir. 1981) 20
Martin v. *Franklin Capital Corp.*, 546 U.S. 132 (2005) 12, 28
Marx v. *General Revenue Corp.*, 133 S. Ct. 1166 (2013) 2

Cases—Continued: Page

Merrill v. *Builders Ornamental Iron Co.*, 197 F.2d 16 (10th Cir. 1952) 14
Miller v. *Fenton*, 474 U.S. 104 (1985) 11, 22
Miller-El v. *Cockrell*, 537 U.S. 322 (2003) 26
Monolithic Power Sys., Inc. v. *O2 Micro Int'l Ltd.*, 726 F.3d 1359 (Fed. Cir. 2013) 10
Norton Co. v. *Carborundum Co.*, 530 F.2d 435 (1st Cir. 1976) 19
Noxell Corp. v. *Firehouse No. 1 Bar-B-Que Rest.*, 771 F.2d 521 (D.C. Cir. 1985) 12
Oetiker v. *Jurid Werke GmbH*, 671 F.2d 596 (D.C. Cir. 1982) 20
Omark Indus., Inc. v. *Colonial Tool Co.*, 672 F.3d 362 (3d Cir. 1982) 19
Orrison v. *C. Hoffberger Co.*, 190 F.2d 787 (4th Cir. 1951) 13, 14, 15
Park-In-Theatres v. *Perkins*, 190 F.2d 137 (9th Cir. 1951) 14
Pennsylvania v. *Delaware Valley Citizens' Council for Clean Air*, 483 U.S 711 (1987) 27
Pennsylvania Crusher Co. v. *Bethlehem Steel Co.*, 193 F.2d 445 (3d Cir. 1951) 14
Pharmacia & Upjohn Co. v. *Mylan Pharm., Inc.*, 182 F.3d 1356 (Fed. Cir. 1999) 20
Phonometrics, Inc. v. *Westin Hotel Co.*, 350 F.3d 1242 (Fed. Cir. 2003) 20
Pickering v. *Holman*, 459 F.2d 403 (9th Cir. 1972) 20
Pierce v. *Underwood*, 487 U.S. 552 (1988) ..... *passim*
Professional Real Estate Investors, Inc. v. *Columbia Pictures Indus., Inc.*, 508 U.S. 49 (1993) 6, 32
Pullman-Standard v. *Swint*, 456 U.S. 273 (1982) 28
Salve Regina Coll. v. *Russell*, 499 U.S. 225 (1991) 28

Cases—Continued: Page

Teese v. *Huntingdon*, 64 U.S. (23 How.) 2 (1860) 2
United States v. *Burr*, 25 F. Cas. 30 (C.C.D. Va. 1807) 28
Vischer Prods. Co. v. *National Pressure Cooker Co.*, 92 F. Supp. 138 (W.D. Wis. 1950) 14
Western Elec. Co. v. *Stewart-Warner Corp.*, 631 F.2d 333 (4th Cir. 1980), cert. denied, 450 U.S. 971 (1981) 19
Whitney Bros. v. *Sprafkin*, 60 F.3d 8 (1st Cir. 1995) 18

Constitution, statutes and rules:

U.S. Const. Art. I, § 8, Cl. 8 (Patent Clause) 2
Act of Aug. 1, 1946, ch. 726, 60 Stat. 778 (35 U.S.C. 70 (1946)) 2, 13
Equal Access to Justice Act, 28 U.S.C. 2412(d) (2006 & Supp. V 2011) 7
28 U.S.C. 2412(d)(1)(A) 12, 21, 29
Lanham Act, 15 U.S.C. 1117(a) 12
15 U.S.C. 1692k(a)(3) 12
28 U.S.C. 1915(d) (1994) 17, 29
28 U.S.C. 1927 19
35 U.S.C. 2(a)(1) 1
35 U.S.C. 2(b)(8) 1
35 U.S.C. 281 2
35 U.S.C. 285 ..... *passim*
42 U.S.C. 1988 (1988) 17
42 U.S.C. 2000e-5(k) 18, 29
Fed. R. Civ. P.:
Rule 11 ..... 5, 7, 9, 33
Rule 11, 480 U.S. 962 (1987) 19, 23
Rule 16 19
Rule 52(a) 30

Miscellaneous: Page

1 Steven Alan Childress & Martha S. Davis, *Federal Standards of Review* (4th ed. 2010) 17, 19, 24, 28, 29

7 Donald S. Chisum, *Chisum on Patents* (1999) 15

92 Cong. Rec. 9188 (1946) 13

98 Cong. Rec. (1952):

p. 9097 16

p. 9323 16

Harry T. Edwards et al., *Federal Standards of Review: Review of District Court Decisions and Agency Actions* (2d ed. 2013) 17, 28

P.J. Federico, *Commentary on the New Patent Act*, 75 J. Pat. & Trademark Off. Soc'y 161 (1993) 16

Henry J. Friendly, *Indiscretion About Discretion*, 31 Emory L.J. 747 (1982) 17

Gov't Accountability Office, *Report No. GAO-13-465, Intellectual Property: Assessing Factors That Affect Patent Infringement Litigation Could Help Improve Patent Quality* (Aug. 2013) 27

Jonathan L. Moore, *Particularizing Patent Pleading: Pleading Patent Infringement in a Post-*Twombly *World*, 18 Tex. Intell. Prop. L.J. 451 (2010) 26

Kimberly A. Moore, *Forum Shopping in Patent Cases: Does Geographic Choice Affect Innovation?*, 79 N.C. L. Rev. 889 (2001) 26

Patent Law Codification and Revision: Hearings Before Subcomm. No. 3 of the House Comm. on the Judiciary, 82d Cong., 1st Sess. (1951) 16

Maurice Rosenberg, *Judicial Discretion of the Trial Court, Viewed from Above*, 22 Syracuse L. Rev. 635 (1971) 17, 22

S. Rep. No. 1503, 79th Cong., 2d Sess. (1946) 3, 13

Miscellaneous—Continued: Page

S. Rep. No. 1979, 82d Cong., 2d Sess. (1952) 15
U.S. Patent No. 5,301,105 (filed Apr. 8, 1991) 4, 6
Webster's New International Dictionary of the English Language (2d ed. 1958) 12

In the Supreme Court of the United States

No. 12-1163

HIGHMARK INC., PETITIONER

v.

ALLCARE HEALTH MANAGEMENT SYSTEMS, INC.

ON WRIT OF CERTIORARI
TO THE UNITED STATES COURT OF APPEALS
FOR THE FEDERAL CIRCUIT

BRIEF FOR THE UNITED STATES
AS AMICUS CURIAE SUPPORTING PETITIONER

INTEREST OF THE UNITED STATES

This case concerns the operation of 35 U.S.C. 285, which authorizes district courts to award attorney's fees in lawsuits under the Patent Act. The United States Patent and Trademark Office is responsible for issuing patents and—through the Secretary of Commerce—advising the President on issues of patent policy. See 35 U.S.C. 2(a)(1) and (b)(8). Several other agencies of the federal government also have a strong regulatory interest in improving the efficacy of the patent system and in reducing the costs and burdens of patent litigation. The extent to which prevailing parties may recover attorney's fees has potentially significant bearing on the incentives for parties to pursue abusive claims and defenses in patent infringement litigation. The United States therefore

has a substantial interest in the Court's resolution of the question presented.

STATEMENT

This case involves the standard of appellate review that applies to a district court's discretionary decision to award fees under the Patent Act, 35 U.S.C. 285. Here, the Federal Circuit reversed part of a fee award after concluding, based on its de novo review of the question, that the district court had erred in characterizing one of respondent's infringement allegations as objectively baseless.

1. The Patent Clause of the Constitution empowers Congress "[t]o promote the Progress of Science and useful Arts, by securing for limited Times to * * * Inventors the exclusive Right to their * * * Discoveries." U.S. Const. Art. I, § 8, Cl. 8. Title 35 establishes the statutory framework governing the issuance of patents, and it grants a patentee "remedy by civil action for infringement of his patent." 35 U.S.C. 281. The Act also authorizes a prevailing party in a patent action to seek attorney's fees. 35 U.S.C. 285.

a. Until 1946, patent lawsuits were subject to the "American Rule," under which "[e]ach litigant pays his own attorney's fees, win or lose." *Marx* v. *General Revenue Corp.*, 133 S. Ct. 1166, 1175 (2013) (citation omitted; brackets in original); see, *e.g.*, *Teese* v. *Huntingdon*, 64 U.S. (23 How.) 2, 8 (1860). That year, Congress enacted a new provision declaring that a district court could, in its discretion, award reasonable attorney's fees to the prevailing party. Act of Aug. 1, 1946 (1946 Act), ch. 726, 60 Stat. 778 (35 U.S.C. 70 (1946)). The provision was not intended to make fee-shifting "an ordinary thing in patent suits," but it granted broad discretion to award fees, both to deter

infringement and "to prevent a gross injustice to an alleged infringer." S. Rep. No. 1503, 79th Cong., 2d Sess. 2 (1946) (1946 Senate Report).

In the Patent Act of 1952, Congress reorganized the patent laws and, in doing so, made non-substantive changes to the fee-shifting provision "for purposes of clarification only." *General Motors Corp.* v. *Devex Corp.*, 461 U.S. 648, 653 n.8 (1983). As revised and codified at 35 U.S.C. 285, the new provision declared that "[t]he court in exceptional cases may award reasonable attorney fees to the prevailing party." That version of Section 285 remains in effect today.

b. The Federal Circuit has interpreted Section 285 to make fee awards appropriate in a range of circumstances, including when a losing plaintiff's legal or factual claims are so unreasonable that it would be grossly unjust to force the prevailing defendant to pay his own fees. See, *e.g.*, *iLOR, LLC* v. *Google, Inc.*, 631 F.3d 1372, 1376-1378 (2011); *Brooks Furniture Mfg., Inc.* v. *Dutailier Int'l, Inc.*, 393 F.3d 1378, 1381 (2005). The court has held that to obtain fees under Section 285 in such cases, the defendant must prove—by clear and convincing evidence—that the plaintiff's claim was both (1) "objectively baseless," and (2) brought in "subjective bad faith." *iLOR*, 631 F.3d at 1376.

In *Octane Fitness, LLC* v. *Icon Health & Fitness, Inc.*, cert. granted, No. 12-1184 (oral argument scheduled for Feb. 26, 2014), this Court is now considering whether this two-prong test unduly restricts fee awards in these circumstances. The United States has filed an amicus brief in *Octane*, arguing that the Court should reject the two-prong test in favor of a broader and more flexible inquiry into whether, under the totality of circumstances present in each case, it would

be grossly unjust for the prevailing defendant to pay his own fees. Under any test, however, this Court will need to determine the standard of review that applies to a district court's determination that a Section 285 fee award is appropriate because of the unreasonableness of the losing party's legal or factual arguments.

2. This case is an infringement action involving a patent relating to the healthcare industry.

a. Petitioner Highmark, Inc., is a non-profit Blue Cross Blue Shield Plan that provides health insurance to its members. Pet. 5. Petitioner administers its plans using a system of "utilization review"—the process by which a health insurer determines whether to approve payment for treatment given to particular patients. Pet. App. 2a-3a, 46a; see *id.* at 75a-76a (describing petitioner's system).

Respondent Allcare Health Management Systems, Inc., is the owner of U.S. Patent No. 5,301,105 (filed Apr. 8, 1991) (the '105 patent). Pet. App. 2a. The '105 patent is directed to "managed health care systems" that connect patients with physicians, medical facilities, insurers, and banks, particularly for purposes of utilization review. *Id.* at 2a-3a. The patent's claims generally cover a method for determining "whether utilization review is necessary in a particular instance" and "whether a recommended treatment is appropriate," and also for "prevent[ing] authorization and payment" for the treatment until it has been approved. *Id.* at 3a.

b. In April 2002, respondent threatened legal action against petitioner, alleging that petitioner's system of utilization review infringed the '105 patent. Pet. App. 45a. Petitioner sued respondent, seeking a declaratory judgment of invalidity, noninfringement,

and unenforceability. *Id.* at 47a. Respondent counterclaimed for infringement, asserting specifically that petitioner's system infringed claims 52, 53, and 102 of the patent. *Ibid.* Respondent eventually withdrew its infringement allegations with respect to claim 102, and the court granted petitioner summary judgment of non-infringement of claims 52 and 53. Respondent appealed to the Federal Circuit, which affirmed without written opinion. 329 Fed. Appx. 280; Pet. App. 5a-6a.

c. While the merits appeal was pending, petitioner filed a motion in the district court seeking attorney's fees under Section 285. The district court granted the fee request in April 2010. Pet. App. 6a.[1]

In finding that the case was "exceptional" under Section 285, the district court stated that respondent had engaged in numerous instances of "vexatious" and "deceitful" conduct over the course of the litigation. Pet. App. 90a. Specifically, it concluded that respondent had "maintained infringement claims well after such claims had been shown by its own experts to be without merit" and had "asserted defenses it and its attorneys knew to be frivolous." *Ibid.* The court ultimately awarded petitioner approximately $4.9 million in attorney's fees and costs under Section 285. *Id.* at 169a.

d. Respondent appealed the fee award to the Federal Circuit. On appeal, a divided panel affirmed in part and reversed in part. Pet. App. 14a-31a.

The panel majority first addressed the standard of review applicable to a district court's decision to

---

[1] Petitioner also initially obtained sanctions against respondent under Fed. R. Civ. P. 11, but the district court vacated the sanctions in August 2010. Pet. App. 103a-152a.

award fees on the ground that a party's litigating position was frivolous. It began by noting that circuit precedent requires proof that the position is both (1) "objectively baseless," and (2) brought in "subjective bad faith." Pet. App. 8a. Relying on *Professional Real Estate Investors, Inc.* v. *Columbia Pictures Industries, Inc.*, 508 U.S. 49 (1993), and *Bard Peripheral Vascular, Inc.* v. *W.L. Gore & Associates, Inc.*, 682 F.3d 1003 (Fed. Cir. 2012), cert. denied, 133 S. Ct. 932 (2013), the panel held that objective baselessness is "a question of law based on underlying mixed questions of law and fact" and, as such, is reviewed "de novo" and "without deference" on appeal. Pet. App. 9a & n.1 (quoting *Bard*, 682 F.3d at 1005). The panel also noted that the existence of subjective bad faith "is reviewed under a deferential standard" for "clear error." *Id.* at 10a n.1, 12a.

Applying those standards, the panel affirmed the district court's fee award with respect to the allegation that petitioner's system infringed claim 102 of the '105 patent. See Pet. App. 14a-18a. The panel reversed the award with respect to claim 52, however, concluding that respondent's allegation of infringement under claim 52 was not objectively unreasonable. *Id.* at 19a-22a. Specifically, the panel determined—contrary to the judgment of the district court—that "[respondent]'s argument with respect to [claim 52] was not 'so unreasonable that no reasonable litigant could believe it would succeed.'" *Id.* at 21a-22a (quoting *iLOR*, 631 F.3d at 1378). The panel majority also ruled that none of respondent's alleged litigation misconduct rendered the case exceptional. *Id.* at 23a-31a.

Judge Mayer dissented in part. Pet. App. 31a-43a. He rejected the majority's view that "no deference is

owed to a district court's finding that the infringement claims asserted by a litigant at trial were objectively unreasonable." *Id.* at 31a. He would have held that "reasonableness is a finding of fact which may be set aside only for clear error." *Ibid.*; see also *id.* at 35a. Judge Mayer noted that this Court has prescribed deferential standards of review for awards of attorney's fees against the United States under the Equal Access to Justice Act (EAJA), 28 U.S.C. 2412(d) (2006 & Supp. V 2011), and for orders imposing sanctions under Federal Rule of Civil Procedure 11. Pet. App. 37a-38a (citing *Pierce* v. *Underwood*, 487 U.S. 552, 565 (1988), and *Cooter & Gell* v. *Hartmarx Corp.*, 496 U.S. 384, 401 (1990)). He added that "[e]ncouraging relitigation of factual disputes on appeal is an enormous waste of the litigants' resources and vitiates the critically important fact-finding role of the district courts." *Id.* at 33a.

e. The Federal Circuit denied rehearing en banc, with five judges dissenting. Pet. App. 179a-214a.

Judge Dyk—the author of the panel opinion—concurred in the denial of review, elaborating on the rationale previously articulated by the panel majority. Pet. App. 182a-190a. Judge Moore, joined by four other judges, filed a dissent that criticized the panel for "deviat[ing] from precedent, invad[ing] the province of the fact finder, and establish[ing] a review standard for exceptional case findings in patent cases that is squarely at odds" with this Court's decisions in *Pierce* and *Cooter & Gell*. *Id.* at 191a-203a. Judge Reyna also dissented, likewise criticizing the panel decision for violating circuit precedent and adopting a non-deferential de novo standard of review for trial court determinations of objective baselessness. *Id.* at

203a-214a (joined in part by Judge Rader and in full by the other three dissenters).

SUMMARY OF ARGUMENT

I. When deciding what standard of review to apply to a particular type of trial-court determination, this Court considers (1) any statutory direction provided by Congress, (2) the history of appellate practice with respect to the determination, and (3) the need to promote the sound functioning of our judicial system. *Pierce* v. *Underwood*, 487 U.S. 552, 558-560 (1988). All three guideposts point to a unitary abuse-of-discretion standard for reviewing fee awards under Section 285.

A. Congress has long vested district courts with broad discretion to determine when fee awards are necessary to prevent gross injustice in appropriate patent cases. The 1946 version of the fee-shifting provision was explicit in this respect. Appellate courts interpreting that provision consistently acknowledged the discretion of district courts over fee awards and reviewed such awards deferentially. Congress reaffirmed that understanding when it enacted Section 285 in 1952.

This Court's precedents make clear that when Congress clearly vests the district court with discretion over a particular decision, the court's exercise of that discretion must be reviewed deferentially on appeal. That principle generally applies even to a trial court's subsidiary analysis of mixed questions of law and fact, including its determination that a party's litigating position is so unreasonable that it justifies a fee award in a particular case. See, *e.g.*, *Christiansburg Garment Co.* v. *EEOC*, 434 U.S. 412, 421, 423 (1978). All aspects of a Section 285 fee award, includ-

ing the trial court's determination that a case is "exceptional" due to a party's baseless litigating position, therefore must be reviewed for abuse of discretion.

B. Until the decision below, there was a long and unbroken historical tradition of reviewing Section 285 fee awards deferentially. For three decades after Section 285 was passed, the regional circuits consistently reviewed such awards for abuse of discretion. The Federal Circuit continued that approach after it assumed exclusive jurisdiction over patent appeals in 1982. It was not until this case that the Federal Circuit first broke with 60 years of practice and announced that baselessness determinations should be reviewed de novo. The prior tradition of deferential review strongly supports an abuse-of-discretion standard.

C. Functional considerations confirm that deferential review is most likely to promote the sound administration of justice. In *Pierce* and *Cooter & Gell* v. *Hartmarx Corp.*, 496 U.S. 384 (1990), this Court addressed the proper standard of review that applies to fee awards under EAJA and Rule 11, respectively. In both cases, the Court confronted essentially the same issue it faces here—whether appellate courts should defer to trial-court determinations that a party's argument is so unreasonable that its adversary should be granted attorney's fees. In both, the Court concluded that deferential review was appropriate because baselessness determinations involve a fact-intensive analysis that the trial court is best positioned to conduct. The Court should follow the same approach here.

II. Even under the abuse-of-discretion standard, appellate courts remain free to reverse decisions

premised on a pure error of law. The Court in *Cooter & Gell* said so explicitly, 496 U.S. at 402, and this Court's subsequent decisions confirm that "[t]he abuse of discretion standard includes review to determine that the discretion was not guided by erroneous legal conclusions." *Koon* v. *United States*, 518 U.S. 81, 100 (1996). Although appellate courts must defer to trial-court determinations that a party's argument is unreasonable under the particular circumstances of the case, they need not defer to the trial court's misstatement of the law or (in patent cases) the court's flawed claim construction.

III. Rather than defer to the district court's firsthand assessment of the case, the Federal Circuit applied de novo review to the court's baselessness determination under Section 285. That approach is inconsistent with this Court's precedents and with the text and history of Section 285. This Court should clarify that Section 285 awards are subject to unitary abuse-of-discretion review on appeal, and should remand the case for further consideration under that standard.

ARGUMENT

The Federal Circuit has recognized that a district court's ultimate decision to award attorney's fees under Section 285 must be reviewed for abuse of discretion. See, *e.g.*, *Monolithic Power Sys., Inc.*, v. *O2 Micro Int'l Ltd.*, 726 F.3d 1359, 1365 (2013). The court in this case nevertheless applied de novo review to the district court's subsidiary determination that respondent's litigating position was "objectively baseless," on the theory that the baselessness determination is a legal conclusion. This Court should reject that approach and hold that a unitary abuse-of-

discretion standard governs appellate review of all aspects of a fee award under Section 285.

I. SECTION 285 FEE AWARDS ARE SUBJECT TO A UNITARY ABUSE-OF-DISCRETION STANDARD OF REVIEW ON APPEAL

In *Pierce* v. *Underwood*, 487 U.S. 552 (1988), this Court explained that, "[f]or purposes of standard of review, decisions by judges are traditionally divided into three categories, denominated questions of law (reviewable *de novo*), questions of fact (reviewable for clear error), and matters of discretion (reviewable for 'abuse of discretion')." *Id.* at 558. To determine the category in which a particular trial-court determination falls, it is necessary to consider (1) whether a "clear statutory prescription" speaks to the standard of review, (2) whether a "historical tradition" addresses the standard, and (3) whether "as a matter of the sound administration of justice, one judicial actor is better positioned than another to decide the issue in question." *Id.* at 558-560 (quoting *Miller* v. *Fenton*, 474 U.S. 104, 114 (1985)). Here, all three criteria strongly support reviewing all aspects of Section 285 fee awards for abuse of discretion.

A. Section 285 Grants District Courts Discretionary Authority Over Fee Awards

1. The text and history of Section 285 establish Congress's intent to vest district courts with broad discretion when deciding whether to make fee awards in patent cases.

a. Section 285 declares that a district court "may award" attorney's fees "in exceptional cases." 35 U.S.C. 285. Unlike some other federal fee-shifting statutes, this language does not dictate the criteria

the court must consider when deciding whether to award fees.[2] Rather, the statement that a court "may award" fees empowers the court to exercise judgment in deciding whether fees are justified in any particular case. As this Court has recognized in interpreting similar fee-shifting provisions, "[t]he word 'may' clearly connotes discretion." *Martin* v. *Franklin Capital Corp.*, 546 U.S. 132, 136 (2005) (brackets in original) (quoting *Fogerty* v. *Fantasy, Inc.*, 510 U.S. 517, 533 (1994)).

The only textual constraint on the district court's exercise of this discretion is the requirement that the case must be "exceptional." 35 U.S.C. 285. That language makes clear that the American Rule will continue to govern the allocation of fees in the mine run of patent-infringement disputes. But it places no limit on the district court's discretionary authority to determine when a losing party's litigating position is so unreasonable that it justifies such an award. The standard meaning of "exceptional" is "not ordinary," "uncommon," or "rare." *Webster's New International Dictionary of the English Language* 889 (2d ed. 1958); see *Noxell Corp.* v. *Firehouse No. 1 Bar-B-Que Rest.*, 771 F.2d 521, 526 (D.C. Cir. 1985) (Ginsburg, J., joined by Scalia, J.) (noting that the word "exceptional" in the identical fee-shifting provision of the Lanham Act, 15 U.S.C. 1117(a), "is most reasonably read to mean what the word is generally understood to indicate—uncommon, not run-of-the-mine").

b. The history and subsequent judicial implementation of the 1946 Act provide the backdrop against which Section 285 was enacted in 1952. The 1946 Act

---

[2] Cf., *e.g.*, 28 U.S.C. 2412(d)(1)(A); 15 U.S.C. 1692k(a)(3).

stated that a court "may *in its discretion* award reasonable attorney's fees to the prevailing party upon the entry of judgment on any patent case." 60 Stat. 778 (emphasis added). The accompanying Senate committee report noted "the discretion given the court" with respect to fees and the "general" terms of this delegation of authority. 1946 Senate Report 2. And Senator Claude Pepper—then serving as Chairman of the Committee on Patents—explained that the purpose of the provision was to "award[] to the court discretionary power to allow plaintiffs to recover attorneys' fees, if the court considers it proper to allow such recoveries." 92 Cong. Rec. 9188 (1946).

Consistent with this understanding, courts interpreted the 1946 provision to implement Congress's goal of empowering district judges. In the years following its enactment, they consistently described that provision as granting significant discretion to decide whether a fee award is appropriate. Thus, for example, the Second Circuit described the power to make such awards as "clearly discretionary," *Algren Watch Findings Co.* v. *Kalinsky*, 197 F.2d 69, 72 (1952); the Fourth Circuit explained that the decision to award fees "lies in the sound discretion of the trial court," *Orrison* v. *C. Hoffberger Co.*, 190 F.2d 787, 791 (1951); and the Seventh Circuit described that decision as "entirely a matter of discretion" for the district court, *Dixie Cup Co.* v. *Paper Container Mfg. Co.*, 174 F.2d 834, 836, cert. denied, 338 U.S. 867 (1949).[3] At the

---

[3] See, *e.g.*, *Dubil* v. *Rayford Camp & Co.*, 184 F.2d 899, 903 (9th Cir. 1950) (noting "discretionary power" of trial courts to award fees); *Blanc* v. *Spartan Tool Co.*, 178 F.2d 104, 105 (7th Cir. 1949) (same); see also, *e.g.*, *Lincoln Elec. Co.* v. *Linde Air Prods. Co.*, 74

same time, courts also repeatedly acknowledged that fees could appropriately be awarded when the losing party advanced arguments that were "unjustified," "unwarranted," "unreasonable," or "groundless" on the merits.[4]

The courts of appeals in this period consistently reviewed fee awards under a deferential abuse-of-discretion standard. The Seventh Circuit expressed the typical approach: "We think it clear that under the statute the question is one of discretion. The court exercised its discretion and that ends the matter unless we can say as a matter of law that there was a clear abuse of discretion." *Blanc* v. *Spartan Tool Co.*,

---

F. Supp. 293, 294 (N.D. Ohio 1947) (noting that "[t]he court is invested with discretionary power" to make fee awards).

[4] See, *e.g.*, *Merrill* v. *Builders Ornamental Iron Co.*, 197 F.2d 16, 25 (10th Cir. 1952) (noting that "wholly unjustified litigation" can warrant a fee award); *Pennsylvania Crusher Co.* v. *Bethlehem Steel Co.*, 193 F.2d 445, 450-451 (3d Cir. 1951) (noting that a finding of "unjustified litigation" would be "adequate justification for awarding attorneys' fees"); *Park-In-Theatres* v. *Perkins*, 190 F.2d 137, 143 (9th Cir. 1951) (implying that a valid finding that a case was brought on "surmise and suspicion" could support a fee award); *Laufenberg* v. *Goldblatt Bros.*, 187 F.2d 823, 825 (7th Cir. 1951) (acknowledging that "unjustified litigation" could support a fee award); *Orrison*, 190 F.2d at 791 (upholding award when plaintiff had "no reasonable ground" for seeking new trial); *Vischer Prods. Co.* v. *National Pressure Cooker Co.*, 92 F. Supp. 138, 139 (W.D. Wis. 1950) (noting that fee award is appropriate when suit is brought "without justification" or is "wholly unfounded"); *Lincoln Elec. Co.*, 74 F. Supp. at 294 (denying fee award because action was not "absolutely unwarranted or unreasonable").

168 F.2d 296, 300, cert. denied, 335 U.S. 853 (1948). Other appellate courts followed the same approach.[5]

c. In 1952, Congress deleted the phrase "in its discretion" and added the "exceptional cases" language. Those changes did not curtail the scope of district courts' discretion. Rather, in enacting Section 285, Congress added the "exceptional cases" language "for purposes of clarification only." *General Motors Corp.* v. *Devex Corp.*, 461 U.S. 648, 652 n.8 (1983); see 7 Donald S. Chisum, *Chisum on Patents* § 20.03[4][c][i], at 20-464 (1999) (noting that "no change in meaning was intended" by the 1952 amendments).

The Senate Report on the 1952 bill stated that the new provision was "substantially the same as the corresponding provision in [the 1946 Act]," and that the "exceptional cases" language was inserted to "express[] the intention of the present [1946] statute as shown by its legislative history and as interpreted by the courts." S. Rep. No. 1979, 82d Cong., 2d Sess. 30 (1952). As noted above, the text, legislative history, and judicial interpretation of the 1946 provision all

---

[5] See, *e.g.*, *Algren*, 197 F.2d at 72 (applying abuse-of-discretion standard and affirming award); *Orrison*, 190 F.2d at 791 (same); *Dubil*, 184 F.2d at 903 ("It is not the duty of the reviewing court to interfere with the exercise of the discretionary power confided to the trial courts by Congress to award attorney fees in proper cases except where there is an abuse of discretion amounting to caprice or an erroneous conception of law on the part of the trial judge."); *Dixie Cup Co.*, 174 F.2d at 836 (applying abuse-of-discretion review and explaining that "to justify a finding of abuse of discretion it is necessary to show that the order complained of was based upon an erroneous conception of the law or was due to the caprice of the presiding judge or to action on his part arbitrary in character").

make clear that the power to shift fees was entrusted to the discretion of the district court.

Consistent with that understanding, Chief Patent Examiner Federico testified that the term "exceptional cases" was "picked up from the reports in passing that first law [*i.e.*, the 1946 Act], which indicated that was what was meant, and the decisions of the courts that have followed that." *Patent Law Codification and Revision: Hearings Before Subcomm. No. 3 of the House Comm. on the Judiciary*, 82d Cong., 1st Sess. 109 (1951). Federico further testified that "[w]hat [the phrase 'exceptional cases'] constitutes is left, and stays left, to the discretion of the court that is conducting the case." *Ibid.*[6]

2. The discussion above makes clear that Congress intended both Section 285 and the 1946 provision to give district courts broad discretionary power to award fees in appropriate cases. Under this Court's precedents, appellate courts therefore must review all aspects of such awards for abuse of discretion.

When a statute or some other source of legal authority clearly commits a decision to the discretion of the district court, that decision is reviewed on appeal for abuse of discretion. See *Pierce*, 487 U.S. at 558 (explaining that "matters of discretion" are reviewable for "abuse of discretion"). This is because discretion and deferential review are two sides of the same coin. As Judge Friendly observed, "the trial judge has

---

[6] Accord, *e.g.*, P.J. Federico, *Commentary on the New Patent Act*, 75 J. Pat. & Trademark Off. Soc'y 161, 216 (1993); 98 Cong. Rec. 9097 (1952) (statement of Sen. Wiley) (noting that 1952 bill "simply constitutes a restatement of the patent laws of the United States); 98 Cong. Rec. at 9323 (statement of Sen. McCarran) (indicating that bill would "codif[y] the present patent laws").

discretion in those cases where his ruling will not be reversed simply because an appellate court disagrees." Henry J. Friendly, *Indiscretion About Discretion*, 31 Emory L.J. 747, 754 (1982).[7]

This Court has often recognized that clear grants of discretionary authority trigger deference on appeal. In *Pierce*, for example, the Court noted that the language of 42 U.S.C. 1988 (1988), which states that a trial court may award attorney's fees to prevailing civil rights litigants "in its discretion," itself answers "the question of what is the standard of appellate review." 487 U.S. at 558. The Court applied the same logic in *Denton* v. *Hernandez*, 504 U.S. 25, 33 (1992), where it addressed the proper standard for reviewing a district court's determination that a litigant's claim is "frivolous" for purposes of 28 U.S.C. 1915(d) (1994). The Court explained that "[b]ecause the frivolousness determination is a discretionary one, * * * a [Section] 1915(d) dismissal is properly reviewed for an abuse of that discretion." 504 U.S. at 33.

As *Denton* illustrates, the Court has equated discretion with deference even when the discretionary decision at issue requires the district court to assess the reasonableness of a party's legal argument. In such circumstances, the Court has consistently indicated that the district court's analysis of the degree to

---

[7] See generally 1 Steven Alan Childress & Martha S. Davis, *Federal Standards of Review* § 4.01[1], at 4-3 (4th ed. 2010); Harry T. Edwards et al., *Federal Standards of Review: Review of District Court Decisions and Agency Actions*, 17, 19 (2d ed. 2013) (Edwards); Maurice Rosenberg, *Judicial Discretion of the Trial Court, Viewed from Above*, 22 Syracuse L. Rev. 635, 636-637 (1971).

which the litigant's position is reasonable is *itself* reviewed for abuse of discretion.

In *Christiansburg Garment Co.* v. *EEOC*, 434 U.S. 412 (1978) for example, the Court considered whether to award attorney's fees to a prevailing Title VII defendant under 42 U.S.C. 2000e-5(k). 434 U.S. at 421, 423. The statute allows for such awards "in [the trial court's] discretion," and the Court interpreted that language to require a finding that an unsuccessful plaintiff's legal claim was "frivolous, unreasonable, or without foundation." *Id.* at 421. The Court then applied abuse-of-discretion rather than de novo review to the trial court's assessment of the reasonableness of the plaintiff's argument. *Id.* at 424 (explaining that, in concluding that the plaintiff's position was not unreasonable or frivolous, "[t]he [district] court * * * exercised its discretion squarely within the permissible bounds of [Section 2000e-5(k)]").[8] In *Chambers* v. *NASCO*, 501 U.S. 32 (1991), the Court applied the same standard when reviewing the imposition of sanctions, under the district court's inherent (and discretionary) equitable powers, where part of the misconduct consisted of the party's filing of "frivolous" pleadings. *Id.* at 50, 55.[9]

---

[8] The courts of appeals have subsequently applied the same standard to this determination. See, *e.g.*, *Garner* v. *Cuyahoga Cnty. Juvenile Ct.*, 554 F.3d 624, 637 (6th Cir. 2009); *LeBlanc-Sternberg* v. *Fletcher*, 143 F.3d 765, 770 (2d Cir. 1998); *Eichman* v. *Linden & Sons, Inc.*, 752 F.2d 1246, 1251 (7th Cir. 1985).

[9] See also, *e.g.*, *Whitney Bros.* v. *Sprafkin*, 60 F.3d 8, 11-15 (1st Cir. 1995) (applying abuse-of-discretion review to determination that claim was "frivolous" for purpose of fee award under court's inherent authority); *Blue* v. *United States Dep't of the Army*, 914 F.2d 525, 530, 538-539 (4th Cir. 1990) (same for award made under

These principles of deference fully apply here. Because Section 285 is a clear grant of authority to district courts, an award of fees is reviewable only for abuse of discretion, even when the award is premised on the baselessness of a party's litigating position.

B. There Is A Longstanding Historical Tradition Of Reviewing Section 285 Awards Deferentially On Appeal

In *Pierce*, this Court indicated that "historical tradition"—*i.e.*, a "long history of appellate practice" with respect to a particular type of trial-court determination—can inform the choice of the proper standard of appellate review. 487 U.S. at 558; see also 1 Steven Alan Childress & Martha S. Davis, *Federal Standards of Review* § 4.01[2], at 4-5 (4th ed. 2010) (Childress). A clear tradition stretching from 1952 until 2012 (when the Federal Circuit decided this case) confirms that Section 285 fee awards are reviewed deferentially.

1. Under the 1946 Act, appellate courts consistently reviewed fee awards in patent cases for abuse of discretion. See pp. 14-15 & note 5, *supra* (citing cases). The regional circuits continued to apply that deferential standard between 1952 (when Congress enacted Section 285) and 1982 (when Congress created the Federal Circuit).[10] The courts of appeals fol-

---

inherent authority; Fed. R. Civ. P. 11, 16; and 28 U.S.C. 1927), cert. denied, 499 U.S. 959 (1991).

[10] See, *e.g.*, *Norton Co.* v. *Carborundum Co.*, 530 F.2d 435, 445 (1st Cir. 1976); *American Safety Table Co.* v. *Schreiber*, 415 F.2d 373, 380 (2d Cir. 1969), cert. denied, 396 U.S. 1038 (1970); *Omark Indus., Inc.* v. *Colonial Tool Co.*, 672 F.2d 362, 365 (3d Cir. 1982); *Western Elec. Co.* v. *Stewart-Warner Corp.*, 631 F.2d 333, 336 (4th Cir. 1980), cert. denied, 450 U.S. 971 (1981); *Hughes Aircraft Co.* v. *Messerschmitt-Boelkow-Blohm, GmbH*, 625 F.2d 580, 584-585 (5th

lowed that approach, moreover, even when reviewing a district court's determination of whether the plaintiff's suit was baseless or unfounded.[11]

2. When the Federal Circuit was given exclusive jurisdiction over patent appeals in 1982, it continued the decades-long tradition of reviewing Section 285 fee awards deferentially. Until its 2012 decision in this case, the court of appeals consistently reviewed "exceptional case" determinations under either a "clear error" or "abuse of discretion" standard, including when the issue was whether the losing party's litigation position was baseless or unjustified.[12] The

---

Cir. 1980), cert. denied, 449 U.S. 1082 (1981); *Garrett Corp.* v. *American Safety Flight Sys., Inc.*, 502 F.2d 9, 22 (5th Cir. 1974); *Kearney & Trecker Corp.* v. *Cincinnati Milacron Inc.*, 562 F.2d 365, 374 (6th Cir. 1977); *Loctite Corp.* v. *Fel-Pro, Inc.*, 667 F.2d 577, 584 (7th Cir. 1981); *Bolt, Beranek & Newman, Inc.* v. *McDonnell Douglas Corp.*, 521 F.2d 338, 344 (8th Cir. 1975), cert. denied, 423 U.S. 1073 (1976); *Pickering* v. *Holman*, 459 F.2d 403, 408 (9th Cir. 1972); *Lam, Inc.* v. *Johns-Manville Corp.*, 668 F.2d 462, 476 (10th Cir.), cert. denied, 456 U.S. 1077 (1982); *Oetiker* v. *Jurid Werke GmbH*, 671 F.2d 596, 602 (D.C. Cir. 1982).

[11] See, *e.g.*, *Oetiker*, 671 F.2d at 602 (applying abuse-of-discretion review to such a determination); *Hughes*, 625 F.2d at 584-585 (same).

[12] See, *e.g.*, *Eon-Net LP* v. *Flagstar Bancorp*, 653 F.3d 1314, 1323-1324, 1326-1328 (Fed. Cir. 2011) (reviewing "objectively baseless" determination for clear error), cert. denied, 132 S. Ct. 2391 (2012); *Digeo, Inc.* v. *Audible, Inc.*, 505 F.3d 1362, 1366-1367 (Fed. Cir. 2007) (reviewing determination that case was not "baseless" or "frivolous" for clear error); *Phonometrics, Inc.* v. *Westin Hotel Co.*, 350 F.3d 1242, 1246-1248 (Fed. Cir. 2003) (reviewing determination that case was "unjustified" for clear error); *Pharmacia & Upjohn Co.* v. *Mylan Pharm., Inc.*, 182 F.3d 1356, 1358-1361 (Fed. Cir. 1999) (reviewing exceptional-case determination resting on "baseless[ness]" for clear error); *Haynes Int'l, Inc.* v. *Jessop Steel Co.*, 8 F.3d 1573, 1579-1580 (Fed. Cir. 1993) (reviewing

court never employed de novo review for this purpose, and its invocation of the deferential "clear error" standard communicated its understanding that the degree to which a claim is unreasonable is a question of fact subject to the factfinder's judgment.[13] The Federal Circuit panel in this case identified no sound justification for departing from that historical tradition of deference. See *Pierce*, 487 U.S. at 558.

C. The Sound Administration of Justice Favors an Abuse-of-Discretion Standard

1. In *Pierce*, this Court addressed the standard of review that applies to fee awards against the government under EAJA. The statute provides that fees "shall" be awarded to a party that prevails against the United States "unless the court finds that the position of the United States was substantially justified." 28 U.S.C. 2412(d)(1)(a). The Court recognized that whether the government's position was "substantially justified" presents a "mixed question[] of law and fact" that may ultimately turn on an "evaluation of the purely legal issue governing the litigation" on the merits. *Pierce*, 487 U.S. at 559-560. Nonetheless, it concluded that "deferential, abuse-of-discretion re-

---

"frivolous[ness]" determination for abuse of discretion); *J.P. Stevens Co.* v. *Lex Tex Ltd.*, 822 F.2d 1047, 1050-1053 (Fed. Cir. 1987) (reviewing determination that litigation was not "unjustified" for abuse of discretion); *CTS Corp.* v. *Piher Int'l Corp.*, 727 F.2d 1550, 1558 (Fed. Cir.) (reviewing "frivolous[ness]" determination for abuse of discretion), cert. denied, 469 U.S. 891 (1984).

[13] The clear-error and abuse-of-discretion standards are effectively the same in this context. *Cooter & Gell* v. *Hartmarx Corp.*, 496 U.S. 384, 401 (1990) (explaining that "[w]hen an appellate court reviews a district court's factual findings, the abuse-of-discretion and clearly erroneous standards are indistinguishable").

view" of the "substantial justification" determination is appropriate because, as a "matter of the sound administration of justice," the trial court is better positioned to decide that issue. *Id.* at 558-560 (quoting *Miller*, 474 U.S. at 114). The Court described that determination as the type of "supervision of litigation" issue that typically receives abuse-of-discretion review in other contexts. *Id.* at 558 n.1.

The Court's analysis relied mainly on practical considerations. The Court noted that "some of the elements that bear upon" whether the government's position was justified "may be known only to the district court," and that, "[n]ot infrequently, the question will turn upon not merely what was the law, but what was the evidence regarding the facts." *Pierce*, 487 U.S. at 560. It recognized that the district court "may have insights not conveyed by the record," and that requiring appellate courts to acquire "full knowledge of the factual setting" would "often come at unusual expense." *Ibid.* The Court also noted that whether the government's position is substantially justified is different from the merits question of whether that position is correct, and that the "investment of appellate energy" in de novo review would not produce "the normal law-clarifying benefits that come from an appellate decision on a question of law." *Id.* at 561.

The Court in *Pierce* emphasized that conferring discretion on the trial judge in this context makes sense because of the "sheer impracticability" of formulating broad rules. 487 U.S. at 561-562 (noting that a "substantial justification" determination typically involves "multifarious, fleeting, special, narrow facts that utterly resist generalization") (quoting Maurice Rosenberg, *Judicial Discretion of the Trial Court,*

Viewed from Above, 22 Syracuse L. Rev. 635, 662 (1971)). It concluded that district courts need "flexibility" in conducting this fact-dependent analysis, and that deferential review is accordingly appropriate. *Id.* at 562-563. Finally, the Court noted that this approach would implement its longstanding view that a "request for attorney's fees should not result in a second major litigation." *Id.* at 563 (quoting *Hensley* v. *Eckerhart*, 461 U.S. 424, 437 (1983)).

2. In *Cooter & Gell* v. *Hartmarx Corp.*, 496 U.S. 384 (1990), this Court held that abuse-of-discretion review applies to similar determinations that a trial court makes when imposing sanctions for attorney misconduct under Federal Rule of Civil Procedure 11. Under the then-applicable version of the rule, sanctions were appropriate if the court determined that an attorney had made a baseless filing without first conducting a reasonable inquiry into the underlying facts, or had advanced legal arguments that were not "warranted by existing law or a good faith argument" for changing the law. Fed. R. Civ. P. 11, 480 U.S. 962 (1987) (amended 1993). The Court acknowledged that these matters—along with the ultimate question of whether the attorney's conduct violated Rule 11—involve "[l]egal issues." *Cooter & Gell*, 496 U.S. at 399. It nonetheless concluded that a trial court's imposition of Rule 11 sanctions, along with the subsidiary legal and factual determinations on which such sanctions are predicated, must be reviewed for abuse of discretion on appeal. *Id.* at 408.

As in *Pierce*, the Court relied principally on functional considerations favoring deference to the district court. Most importantly, it explained that "[r]ather than mandating an inquiry into purely legal questions,

such as whether the attorney's legal argument was correct, the Rule requires a court to consider issues rooted in factual determinations." *Cooter & Gell*, 496 U.S. at 401. It concluded that because of the district court's "[f]amiliar[ity] with the issues and litigants, [it] is better situated than the court of appeals to marshal the pertinent facts and apply the fact-dependent legal standard mandated by Rule 11." *Id.* at 402.

Relying heavily on *Pierce*, the Court emphasized that the deferential standard applies to appellate review of the district court's determination whether particular legal arguments were justified. *Cooter & Gell*, 496 U.S. at 403-404. The Court stressed the relatively slim benefit that de novo review of such issues would bring to the legal system as a whole. In particular, it noted that "[a]n appellate court's [de novo] review of whether a legal position was reasonable or plausible enough under the circumstances" would neither "establish clear guidelines for lower courts" nor "clarify the underlying principles of law." *Id.* at 405.[14]

3. A fee award under Section 285 implicates the same "supervision of litigation" considerations that this Court addressed in *Pierce* and *Cooter & Gell*. As in those cases, this Court should hold that appellate

---

[14] As discussed at greater length at pp. 28-31, *infra*, the Court also explained that a trial court "would necessarily abuse its discretion if it based its ruling on an erroneous view of the law." *Cooter & Gell*, 496 U.S. at 405. The opinion as a whole made clear, however, that this category of error does not include a court's assessment that a party's litigating position was "frivolous." *Id.* at 399-405; see Childress § 4.01[2] n.43, at 4-9 (discussing *Cooter & Gell*).

review of Section 285 awards must proceed under a unitary abuse-of-discretion standard.

a. As in *Pierce* and *Cotter & Gell*, a district court's assessment of the reasonableness of a party's litigating position requires a fact-dependent analysis of that position in light of all of the circumstances present in the case. The Federal Circuit itself has recognized that, when a district court determines whether a party's position is objectively baseless, it must consider the "merits of the entire litigation determined 'based on the record ultimately made in the infringement proceedings.'" Pet. App. 12a (quoting *Bard Peripheral Vascular, Inc.* v. *W.L. Gore & Assocs., Inc.*, 682 F.3d 1003, 1008 (Fed. Cir. 2012), cert. denied, 133 S. Ct. 932 (2013)). And many of the factors relevant to that determination "will turn upon not merely what was the law, but what was the evidence regarding the facts." *Pierce*, 487 U.S. at 560.

For example, whether a patent holder had good reason to believe that its patent had been infringed could depend on the "failure [of the patent holder] to conduct an adequate pre-filing investigation" of the alleged infringer's product. See Pet. App. 17a n.4; see also *id.* at 22a n.6. Or it could turn on the patent holder's decision to "ignore[] persuasive, publically-available evidence which clearly demonstrated that [the alleged infringer's] accused system failed to meet key elements of [the patent] claim." *Id.* at 39a-40a (Mayer, J., dissenting in part) (footnote omitted). It could also be affected by the district court's firsthand assessment of witness testimony on issues of patent validity, claim construction, and infringement.

The fact-intensive nature of the inquiry strongly supports deferential review on appeal. The district

court will likely have "insights not conveyed by the record, into such matters as whether particular evidence was worthy of being relied upon, or whether critical facts could easily have been verified" by the patent holder. *Pierce*, 487 U.S. at 560. Unlike an appellate court, the district court will have firsthand exposure to the witnesses, and will be in a far better position to assess their credibility. *Miller-El* v. *Cockrell*, 537 U.S. 322, 339 (2003). The trial judge therefore will be "[f]amiliar with the issues and litigants" and thus "better situated than the court of appeals to marshal the pertinent facts and apply the fact-dependent legal standard." *Cooter & Gell*, 496 U.S. at 402.

b. De novo appellate review of a district court's assessment of the objective strength of the losing party's legal arguments would also entail "unusual expense." *Pierce*, 487 U.S. at 560. It would require the court of appeals "to undertake the unaccustomed task of reviewing the entire record, not just to determine whether there existed the usual minimum support for the merits determination made by the fact-finder below, but to determine whether urging of the opposite merits determination" was objectively unjustified. *Ibid.* These concerns are especially acute in the context of patent litigation, which involves the application of highly technical legal doctrine to complex technologies and can generate long dockets typically stretching over several years.[15]

---

[15] See generally, *e.g.*, Jonathan L. Moore, *Particularizing Patent Pleading: Pleading Patent Infringement In A Post-*Twombly *World*, 18 Tex. Intell. Prop. L.J. 451, 459-460 (2010); Kimberly A. Moore, *Forum Shopping in Patent Cases: Does Geographic Choice Affect Innovation?*, 79 N.C. L. Rev. 889, 908, 932-933

By contrast, deferring to determinations reached by courts "on the front lines of litigation" would "streamline the litigation process by freeing appellate courts from the duty of reweighing evidence and reconsidering facts already weighed and considered by the district court." *Cooter & Gell*, 496 U.S. at 404. Deferential review would also avoid "a second major litigation" simply for the purpose of allocating fees—a prospect this Court has strongly disfavored. *Pierce*, 487 U.S. at 563 (quoting *Hensley*, 461 U.S. at 437); see *Pennsylvania* v. *Delaware Valley Citizens' Council for Clean Air*, 483 U.S 711, 722 (1987) (noting that fee litigation "is often protracted, complicated, and exhausting" and "should be simplified to the maximum extent possible"). Reviewing fee awards for abuse of discretion would also promote efficiency and lower costs by "discourag[ing] litigants from pursuing marginal appeals." *Cooter & Gell*, 496 U.S. at 404; see *Hensley*, 461 U.S. at 437 (noting "the desirability of avoiding frequent appellate review of what essentially are factual matters").

c. Finally, de novo review of Section 285 fee awards is likely to generate few benefits. Just as in *Pierce* and *Cooter & Gell*, appellate decisions reviewing fee awards under Section 285 will not "produce the normal law-clarifying benefits that come from an appellate decision on a question of law," *Pierce*, 487 U.S. at 561, since the appellate court's inquiry will focus on whether particular merits arguments were reasonable, not on whether they were correct. See *Cooter & Gell*, 496 U.S. at 405 (rejecting de novo re-

---

(2001); Gov't Accountability Office, *Report No. GAO-13-465, Intellectual Property: Assessing Factors That Affect Patent Infringement Litigation Could Help Improve Patent Quality* (Aug. 2013).

view because it would not "clarify the underlying principles of law" at issue on the merits). In these circumstances, where "probing appellate scrutiny will not contribute to the clarity of legal doctrine," deferential review is appropriate. *Salve Regina Coll.* v. *Russell*, 499 U.S. 225, 233 (1991) (citation omitted).

II. A UNITARY ABUSE-OF-DISCRETION STANDARD WILL NOT PRECLUDE CORRECTION OF PURE LEGAL ERROR

Although abuse-of-discretion review by definition involves deference to a district court's application of law to fact, such review does not entail deference to a court's pure legal error. As this Court explained in *Cooter & Gell*, a trial court "would necessarily abuse its discretion if it based its ruling on an erroneous view of the law." 496 U.S. at 405.[16] This rule comports with the Court's longstanding admonition that "a motion to [a court's] discretion is a motion, not to its inclination, but to its judgment; and its judgment is to be guided by sound legal principles." *Martin*, 546 U.S. at 139 (quoting *United States* v. *Burr*, 25 F. Cas. 30, 35 (C.C.D. Va. 1807) (No. 14,692d) (Marshall, C.J.)).[17]

---

[16] See also, *e.g.*, *Koon* v. *United States*, 518 U.S. 81, 100 (1996) (holding that trial court "by definition abuses its discretion when it makes an error of law"); *Pullman-Standard* v. *Swint*, 456 U.S. 273, 287 (1982); Childress § 4.01[2], at 4-5; Edwards 73-74.

[17] Similarly, review of Section 285 awards for abuse of discretion would not preclude an appellate court from reversing a district court's clearly erroneous factual finding. See *Cooter & Gell*, 496 U.S. at 401, 405 (describing abuse-of-discretion and clearly-erroneous standard as "indistinguishable" with respect to factual findings, and noting that a "district court would necessarily abuse

As *Cooter & Gell* makes clear, a district court's ultimate determination that a party's filing was unreasonable or frivolous is not the sort of pure legal error that is reviewed without deference under the abuse-of-discretion standard. 496 U.S. at 399-405; Childress § 4.01[2] n.43, at 4-9 (discussing *Cooter & Gell*). This conclusion tracks the Court's precedents in other areas of law, where (as discussed above) appellate courts will deferentially review similar determinations. See, *e.g.*, *Denton*, 504 U.S. at 33 (addressing whether action is "frivolous" under 28 U.S.C. 1915(d) (1988)); *Chambers*, 501 U.S. at 50, 55 (addressing whether sanction is appropriate, in part for filing "frivolous" papers, under court's equitable powers); *Pierce*, 487 U.S. at 557-563 (addressing whether government's litigating position is "substantially justified" under 28 U.S.C. 2412(d)(1)(A)); *Christiansburg*, 434 U.S. at 421, 423 (addressing whether party's position is "frivolous, unreasonable, or without foundation" for purposes of 42 U.S.C. 2000e-5(k)). To the extent a Section 285 fee award turns on the district court's view that a party's litigating position is objectively baseless, that determination is subject to deferential review on appeal.

By contrast, no deference would be appropriate to a district court's reliance "on a materially incorrect view of the relevant law" in analyzing objective baselessness under Section 285. *Cooter & Gell*, 496 U.S. at 402. After all, "[t]he abuse-of-discretion standard includes review to determine that the discretion was not guided by erroneous legal conclusions." *Koon* v. *United States*, 518 U.S. 81, 100 (1996). Thus, if the

---

its discretion if it based its ruling on * * * a clearly erroneous assessment of the evidence").

district court based its ruling that the losing party's position was unjustified on the court's misinterpretation of the Patent Act or other applicable statutes, or on an erroneous view of this Court's precedents, such an error would be reversible on appeal even under the abuse-of-discretion standard.

The same principle applies when the district court's analysis turns on a question of claim construction. Under current Federal Circuit precedent, the proper construction of a patent claim is a "pure issue of law" that, when reviewed on the merits, is subject to de novo review. *Cybor Corp.* v. *FAS Techs., Inc.*, 138 F.3d 1448, 1455 (1998) (en banc).[18] To the extent a district court relies on its own claim construction to conclude that a party's litigating position is baseless for purposes of Section 285, a reviewing court may assess without deference whether that claim construction is correct. In that context, the claim itself is analogous to the "relevant law," and a court's "materially incorrect" view of the claim is not entitled to deference. *Cooter & Gell*, 496 U.S. at 402. Similarly, no deference would be appropriate if the district court misconstrued the applicable rules of claim construction (*e.g.*, by ignoring definitions of claim terms provided in the specification, or by stating that an ambig-

---

[18] The Federal Circuit is now considering whether to overturn this rule. See *Lighting Ballast Control LLC* v. *Philips Elecs. N. Am. Corp.*, 500 Fed. Appx. 951 (2013) (per curiam) (ordering rehearing en banc and directing parties to address whether *Cybor* should be overruled). The United States has filed an amicus brief arguing that the ultimate construction of a claim is an issue of law, but that subsidiary factual findings made by a district court in the course of its claim construction must be reviewed for clear error under Federal Rule of Civil Procedure 52(a). See Gov't Amicus Br., *Lighting Ballast*, *supra* (No. 12-1014).

uous claim term should be construed without reference to the specification as a whole). If the reviewing court concludes that the district court's fee award was based on that court's erroneous claim construction, that pure legal error would constitute an abuse of discretion warranting reversal. By contrast, if the appellate and trial courts merely disagree over the extent to which the losing party's claim construction was reasonable, the trial court's determination is entitled to deference on appeal.

Understood in this way, abuse-of-discretion review affirms the appellate court's role in policing pure legal determinations, while protecting the district court's discretionary judgment with respect to the application of the law to concrete factual circumstances.

III. THE FEDERAL CIRCUIT'S ANALYSIS IS FLAWED, AND THE CASE SHOULD BE REMANDED

The Federal Circuit reversed part of the fee award in this case after concluding that respondent's claim was not objectively baseless. The Federal Circuit rejected the district court's contrary resolution of the baselessness issue, not because it believed that the district court had abused its discretion, but because it viewed the issue as a question of law subject to de novo review. The court of appeals' reasons for applying de novo review were mistaken, and the case should be remanded for application of the correct abuse-of-discretion standard.

The court of appeals held that, when a trial court awards fees because the losing party's position was "objectively baseless," that subsidiary determination presents a "question of law" that must be reviewed "without deference." Pet. App. 9a (citations omitted). That analysis is faulty. Rather, a district court's as-

sessment of the *degree* to which a party's litigation position is unreasonable or baseless presents a mixed question of law and fact reviewed for abuse of discretion on appeal. See pp. 17-18, 21-28, *supra*. As explained above, such deferential review is appropriate in the context of Section 285 because of the provision's text and drafting history, the consistent judicial practice of applying deferential review for more than six decades, and the same functional considerations that were implicated in *Pierce* and *Cooter & Gell*.

The Federal Circuit's various efforts to justify de novo review in this case are all unpersuasive. Most importantly, the court of appeals had no sound basis for relying on this Court's statement in *Professional Real Estate Investors, Inc.* v. *Columbia Pictures Industries, Inc.*, 508 U.S. 49 (1993) (*PRE*), that "[w]here * * * there is no dispute over the predicate facts of the underlying legal proceeding, a court may decide probable cause as a matter of law." *Id.* at 63; see Pet. App. 9a-10a n.1, 184a. As petitioner explains, that language (1) refers to the allocation of decisional authority between judge and jury, not between the trial and appellate courts, and (2) does not apply in circumstances where the relevant facts *are* in dispute, as they are here. Pet. Br. 41-44; see Pet. App. 193a-195a (Moore, J., dissenting). *PRE* also did not involve a district court's exercise of discretionary authority to make fee awards or impose sanctions in its supervisory role over litigation. *PRE* therefore does not cast doubt on the clear implications of more

closely analogous precedents, such as *Pierce*, *Cooter & Gell*, *Christiansburg*, *Denton*, and *Chambers*.[19]

The court of appeals' attempts to distinguish *Pierce* and *Cooter & Gell* are equally unavailing. The court rightly noted that there are some differences between fee awards under Section 285, on the one hand, and EAJA fees and Rule 11, on the other. Pet. App. 10a-11a n.1. But none of these differences changes the fact that the core inquiry in each context—the extent to which a party's litigating position is objectively reasonable—is a "mixed question[] of law and fact," to be determined through a careful analysis of the particular circumstances of each case. *Pierce*, 487 U.S. at 559-560.

Moreover, although the court of appeals seemed to assert that the objective-baselessness determination can never turn on disputable facts, Pet. App. 11a n.1, it failed to explain why this is so. As noted above, the particular facts of each case will bear heavily on whether a litigant's position was justified under the circumstances. See pp. 25-27, *supra*; see also Pet. App. 35a-37a (Mayer, J., dissenting in part); *id.* at 200a-201a (Moore, J., dissenting). Indeed, the court's own analysis of the reasonableness of respondent's position in this very case relied on the facts and circumstances at issue here. *Id.* at 14a-16a, 19a-26a.

---

[19] Judge Dyk's cursory assertion (Pet. App. 186a) that Section 285's purpose was to "restrict the discretion in the district courts" is at odds with the history of that provision. See pp. 11-16, *supra*.

CONCLUSION

The judgment of the court of appeals should be vacated, and the case should be remanded for appellate review of the district court's fee award under an abuse-of-discretion standard.

Respectfully submitted.

DONALD B. VERRILLI, JR.
Solicitor General
STUART F. DELERY
Assistant Attorney General
MALCOLM L. STEWART
Deputy Solicitor General
ROMAN MARTINEZ
Assistant to the Solicitor General
SCOTT R. MCINTOSH
MICHAEL E. ROBINSON
Attorneys

NATHAN K. KELLEY
Solicitor and Deputy General Counsel
JAMIE L. SIMPSON
JOSEPH MATAL
LORE A. UNT
Associate Solicitors
United States Patent and Trademark Office

DECEMBER 2013

AMICUS CURIAE BRIEF

Supreme Court, U.S.
FILED
DEC - 9 2013
OFFICE OF THE CLERK

No. 12-1163

IN THE
Supreme Court of the United States

HIGHMARK INC.,
Petitioner,
v.
ALLCARE HEALTH MANAGEMENT SYSTEMS, INC.,
Respondent.

On Writ of Certiorari to the United States Court of Appeals for the Federal Circuit

BRIEF OF AMICUS CURIAE, AMERICAN INTELLECTUAL PROPERTY LAW ASSOCIATION IN SUPPORT OF NEITHER PARTY

WAYNE P. SOBON,
President
AMERICAN INTELLECTUAL PROPERTY LAW ASSOCIATION
241 18th Street, South
Suite 700
Arlington, VA 22202
(703) 415-0780

BARBARA A. FIACCO
Counsel of Record
DONALD R. WARE
STACY A. ANDERSON
FOLEY HOAG LLP
155 Seaport Boulevard
Boston, MA 02210
(617) 832-1000
bfiacco@foleyhoag.com

December 9, 2013

TABLE OF CONTENTS

TABLE OF AUTHORITIES iii

STATEMENT OF INTEREST 1

SUMMARY OF ARGUMENT 2

ARGUMENT 3

I. The *Highmark* Decision Is a Significant Departure from the Well-Established Abuse-of-Discretion Standard Applied to Exceptional Case Determinations. 3

II. The Text of Section 285 and its Legislative History Support Deferential Review of a District Court's Exceptional Case Determination. 6

III. The Federal Circuit's Recent Substitution of *De Novo* Review Conflicts with this Court's Precedent Mandating Deferential Review of District Courts' Fee Awards. 11

A. This Court's decisions in *Pierce* and *Cooter* mandate deferential review of all aspects of district courts' determinations under Section 285. 11

B. As in *Cooter* and *Pierce*, the district court is best positioned to decide "objective baselessness." 15

C. As in *Cooter* and *Pierce*, the objective baselessness inquiry resists generalization that might otherwise support a less deferential review. 22

D. Under the *Cooter* and *Pierce* framework, the return to a more flexible test for the district court's exceptional case determination would appropriately be reviewed under an abuse-of-discretion standard. 26

IV. Deferential Review of Exceptional Case Determinations Will Advance the Policy Goals of Section 285 by Enhancing the Deterrence Function of the Statute. 28

V. This Court's Reaffirmation of the District Courts' Discretionary Authority Under Section 285 and the Deferential Standard of Review Will Help Guide District Courts in Managing Abusive Litigation Tactics. 30

CONCLUSION 34

TABLE OF AUTHORITIES

CASES

Bard Peripheral Vascular, Inc. v. W.L. Gore & Assocs., Inc.,
682 F.3d 1003 (Fed. Cir. 2012) 24

Bayer Aktiengesellschaft v. Duphar Int'l Research B.V.,
738 F.2d 1237 (Fed. Cir. 1984) 4, 10

Brooks Furniture Mfg. Inc. v. Dutailier Int'l, Inc.,
393 F.3d 1378 (Fed. Cir. 2005) 5, 6, 26

Brooktree Corp. v. Advanced Micro Devices,
977 F.2d 1555 (Fed. Cir. 1992) 10, 19

Chambers v. Nasco, Inc.,
501 U.S. 32 (1991) 29

Christiansburg Garment Co. v. EEOC,
434 U.S. 412 (1978) 7

Computer Docking Station Corp. v. Dell, Inc.,
519 F.3d 1366 (Fed. Cir. 2008) 20

Cooter & Gell v. Hartmarx Corp.,
496 U.S. 384 (1990) ..... *passim*

Cybor Corp. v. FAS Techs., Inc.,
138 F.3d 1448 (Fed. Cir. 1998) 19

Dixie Cup Co. v. Paper Container Mfg. Co.,
174 F.2d 834 (7th Cir. 1949) 9

Dubil v. Rayford Camp & Co.,
184 F.2d. 899 ((9th Cir. 1950) 9

eBay Inc. v. MercExchange, L.L.C.,
547 U.S. 388 (2006) 32

Eltech Sys. Corp v. PPG Indus., Inc.,
903 F.2d 805 (Fed. Cir. 1990)..... 20, 22

Eon-Net LP v. Flagstar Bancorp,
653 F.3d 1314 (Fed. Cir. 2011)..... 4, 5, 19

Hartman v. Hallmark Cards, Inc.,
833 F.2d 117 (8th Cir. 1987) 10

Highmark, Inc. v. Allcare Health Mgmt., Inc.,
687 F.3d. 1300 (Fed. Cir. 2012), reh'g en banc denied, 701 F.3d 1351 (Fed. Cir. 2012).....*passim*

Hoge Warren Zimmermann Co. v. Nourse & Co.,
293 F.2d 779 (6th Cir. 1961) 9

ICU Med., Inc. v. Alaris Med. Sys., Inc.,
558 F.3d 1368 (Fed. Cir. 2009)..... 20

Johnson v. Jones,
149 F.3d 494 (6th Cir. 1998) 10

KSR Int'l Co. v. Teleflex Inc.,
550 U.S. 398 (2007) 33, 34

Lipscher v. LRP Publs., Inc.,
266 F.3d 1305 (11th Cir. 2001) 10

Mathis v. Spears,
857 F.2d 749 (Fed. Cir. 1988) 28

Miller v. Fenton,
474 U.S. 104 (1985) 23

Multiform Desiccants, Inc. v. Medzam Ltd.,
133 F.3d 1473 (Fed. Cir. 1998) 4

Nat'l Brass Co. v. Michigan Hardware Co.,
75 F. Supp. 140 (W.D. Mich. 1948) 9

Nat'l Hockey League. v. Metropolitan Hockey Club,
427 U.S. 639 (1976) 30

Nat'l Presto Indus., Inc. v. West Bend Co.,
76 F.3d 1185 (Fed. Cir. 1996) 4

Octane Fitness, LLC v. Icon Health & Fitness, Inc., 12-1184 ..... 5, 26, 27

Pierce v. Underwood,
487 U.S. 552 (1988) ..... *passim*

Procter & Gamble Co. v. Amway Corp.,
280 F.3d 519 (5th Cir. 2002) 10

Prof'l Real Estate Investors, Inc. v. Columbia Pictures Industries, Inc.,
508 U.S. 49 (1993) 14

Reader's Digest Assoc. v. Conservative Digest,
821 F.2d 800 (D.C. Cir. 1987) 10

Retail Servs. v. Freebies Publ'g,
364 F.3d 535 (4th Cir. 2004) 10

S Indus. v. Centra 2000,
249 F.3d 625 (7th Cir. 2001) 10

Securacomm Consulting v. Securacom,
224 F.3d 273 (3d Cir. 2000) 10

Superior Fireplace Co. v. Majestic Prods. Co.,
270 F.3d 1358 (Fed. Cir. 2001) 10

Swann v. Charlotte-Mecklenburg Bd. of Educ.,
402 U.S. 1 (1971) 29

Symbol Techs., Inc. v. Lemelson Med.,
277 F.3d 1361 (Fed. Cir. 2002) 8

Synthes USA, LLC v. Spinal Kinetics, Inc.,
-- F.3d, --, 2013 WL 5788675 (Fed. Cir. Oct. 29, 2013) 6

Twin Peaks Prods. v. Publ'ns Int'l, Ltd.,
996 F.2d 1366 (2d Cir. 1993) 10

RULES

Fed. R. Civ. P. 11 ..... 13, 14, 22, 33

D. Minn. L. R., 2005 Patent Advisory Committee Preface 16

E. D. Tex. Patent R. 3-6(a) & (b) 17

N. D. Cal. Patent L.R. 4-3 17

N. D. Cal. Patent L.R. 4-4 17

N. D. Ill. Patent L.R., Preamble 17

Sup. Ct. R. 37.3(a) 2

Sup. Ct. R. 37.6 1

STATUTES

15 U.S.C. § 1117(a) 10

28 U.S.C. §2412 11

35 U.S.C. § 284 ..... 24, 28

35 U.S.C. § 285 ..... *passim*

35 U.S.C. 102(g) 22

Pub. L. No. 587, 60 Stat. 778 (codified at 35 U.S.C. § 70 (1946)) 7, 8

Pub. L. No. 82-593, 1952 U.S.C.C.A.N. 753 (66 Stat. 792, 813) 8

LEGISLATIVE MATERIALS

H.R. Rep. No. 1587 (1946) 7

H.R. Rep. No. 1587, Part 2 (1946) 7

H.R. 5231, 79th Cong. (1946) 7

Recovery in Patent Infringement Suits: Hearing on H.R. 5231 Before the Comm. on Patents, 79th Cong. 10-14 (1946) 7

S. Rep. No. 1503 (1946) 7

OTHER AUTHORITIES

Am. Intellectual Property Law Ass'n, *Report of the Economic Survey* (2013) 28

Steven Alan Childress & Martha S. Davis, *Standards of Review* § 4.16 (4th ed. 2010) 29

P.J. Federico, *Commentary on the New Patent Act*, 75 J. Pat & Trademark Off. Soc'y 161 (1993) 8

Robert M. Isackson, *After 'eBay,' Injunctions Decrease*, 30 Nat'l L. J., Dec. 3, 2007, at S1. 33

Emery G. Lee & Thomas E. Willging, Fed. Judicial Ctr., *Litigation Costs in Civil Cases Multivariate Analysis* (2010), *available at* http://www.fjc.gov/public/pdf.nsf/lookup/ (2010) 28

Stevan D. Porter, Jr., *Post-eBay Economic Standards for Assessing Irreparable Harm*, 94 J. Pat. & Trademark Off. Soc'y 250 (2011) 33

PricewaterhouseCoopers LLP, *2012 Patent Litigation Study* (2012), *available at* http://www.pwc.com/en_US/us/forensic-services/publications/assets/2012-patent-litigation-study.pdf. 17

Randall R. Rader et al., *Make Patent Trolls Pay in Court*, N.Y. Times, June 4, 2013, at A25 31

Randall R. Rader, *The State of Patent Litigation*, 21 Fed. Cir. B.J. 331 (2011)..... 31

Greg Upchurch, *Effect of KSR on Summary Judgment Decisions on Obviousness*, www.legalmetric.com/presentations/ksr_summary_judgment_obviousness.ppt (last visited Nov. 15, 2013) 34

James Ware & Brian Davy, *The History, Content, Application and Influence of the Northern District of California's Local Patent Rules*, 25 Santa Clara Computer & High Tech. L.J. 965 (2009) 16

Harold C. Wegner, *The Disclosure Requirements of the 1952 Patent Act: Looking Back and a New Statute for the Next Fifty Years*, 37 Akron L. Rev. 243 (2004) 8

STATEMENT OF INTEREST

The American Intellectual Property Law Association ("AIPLA") is a voluntary bar association with approximately 15,000 members who are lawyers in both private and corporate practice, judges, patent agents, academics, law students, and USPTO professionals. Our members practice in a wide and diverse spectrum of intellectual property fields, including patent, trademark, copyright, and unfair competition law, as well as other fields of law affecting intellectual property. They represent both owners and users of intellectual property, as well as those who litigate and prosecute before patent and trademark offices, giving AIPLA a unique and varied perspective on patent litigation practices.[1]

AIPLA has no interest in any party to this litigation or stake in the outcome of this case, other than its interest in seeking a correct and consistent

---

[1] In accordance with Supreme Court Rule 37.6, AIPLA states that this brief was not authored, in whole or in part, by counsel to a party, and that no monetary contribution to the preparation or submission of this brief was made by any person or entity other than AIPLA or its counsel. After reasonable investigation, AIPLA believes that (i) no member of its Board or *Amicus* Committee who voted to file this brief, or any attorney in the law firm or corporation of such a member, represents a party to this litigation in this matter, (ii) no representative of any party to this litigation participated in the authorship of this brief, and (iii) no one other than AIPLA, or its members who authored this brief and their law firms or employers, made a monetary contribution to the preparation or submission of this brief.

interpretation of the law affecting intellectual property.[2]

SUMMARY OF ARGUMENT

AIPLA urges the Court to reverse the recent decision of the Court of Appeals for the Federal Circuit applying a *de novo* standard of review to the district court's "exceptional case" determination, the predicate for an award of attorneys' fees under 35 U.S.C. § 285. In doing so, this Court should reaffirm the deferential abuse-of-discretion standard of review for Section 285 determinations, as firmly established by statute and more than 60 years of precedent.

The district courts are in the best position to make the fact-bound determinations associated with fee awards under Section 285, including the determination of whether a litigant's position was objectively baseless in the circumstances of a given case. Because such determinations cannot be generalized to other cases, *de novo* review of objective baselessness determinations is not justified under this Court's precedent. Requiring appellate courts to evaluate these questions anew, without the benefit of the trial court's full knowledge of the record and history of the proceedings, undermines

---

[2] AIPLA sought consent to file this brief from the counsel of record for all parties, pursuant to Supreme Court Rule 37.3(a). Counsel for petitioner filed a general consent letter with the Clerk, and counsel for respondent informed AIPLA of respondent's consent in an email filed with this brief.

the authority of district court judges to award fees as a means to deter spurious claims and defenses, and to manage the conduct of the parties and attorneys who appear before them.

The district courts' authority to award fees under Section 285 is an important tool to discourage patent litigation abuses that damage our patent system and tax the limited resources of our already over-burdened federal courts. The judges who preside over lengthy, complex, and often contentious patent cases are best situated to make exceptional case determinations and exercise equitable discretion in awarding attorneys' fees. It is unwise to undermine the discretion of district court judges in overseeing patent cases by adopting a new and unprecedented *de novo* standard of review under Section 285.

ARGUMENT

I. The *Highmark* Decision Is a Significant Departure from the Well-Established Abuse-of-Discretion Standard Applied to Exceptional Case Determinations.

In *Highmark, Inc. v. Allcare Health Management Systems, Inc.*, 687 F.3d 1300 (Fed. Cir. 2012), *reh'g en banc denied*, 701 F.3d 1351 (Fed. Cir. 2012), a highly fractured Federal Circuit held for the first time that *de novo* review applies to a district court's finding that a litigant's position was objectively baseless for purposes of evaluating whether the case is "exceptional" under Section 285. Rather than applying an abuse-of-discretion standard to all aspects of a district court's decision

on fees as it had in the past, the Federal Circuit singled out the "objective baselessness" element of the analysis for *de novo* review. Its holding cannot be reconciled with this Court's precedent and the analytical framework this Court has established, nor is it consistent with the deferential standard of review applied for more than 60 years, first by the regional circuits and then by the Federal Circuit after its creation in 1982.

Under Federal Circuit precedent, the district court's determination whether to award attorneys' fees under Section 285 is a two-step process. First, the court determines whether the case is exceptional, which the party seeking fees must establish by clear and convincing evidence. *Eon-Net LP v. Flagstar Bancorp*, 653 F.3d 1314, 1323 (Fed. Cir. 2011). Second, if the court finds the case exceptional, it then decides what amount, if any, of attorneys' fees are appropriate under the circumstances. *Nat'l Presto Indus., Inc. v. West Bend Co.*, 76 F.3d 1185, 1197 (Fed. Cir. 1996) (district court has discretion not to award attorneys' fees, even where case is exceptional). Traditionally, factors that may result in an exceptional case finding have included instances of inequitable conduct in obtaining the asserted patent, willful infringement, litigation misconduct, vexatious litigation, or the pursuit of frivolous claims. *See Multiform Desiccants, Inc. v. Medzam Ltd.*, 133 F.3d 1473, 1481-82 (Fed. Cir. 1998); *Bayer Aktiengesellschaft v. Duphar Int'l Research B.V.*, 738 F.2d 1237, 1242 (Fed. Cir. 1984).

For many years, the Federal Circuit reviewed a district court's exceptional case finding for clear error and its decision whether to award fees and the amount of fees for abuse of discretion. *Eon-Net LP*, 653 F.3d at 1323. As a practical matter, though, as this Court has noted, when an appellate court is reviewing a district court's factual findings, the clearly erroneous standard of review is "indistinguishable" from the abuse-of-discretion standard. *Cooter & Gell v. Hartmarx Corp.*, 496 U.S. 384, 401 (1990). "A court of appeals would be justified in concluding that a district court had abused its discretion in making a factual finding ***only*** if the finding were clearly erroneous." *Id.* (emphasis added).[3]

In a 2005 panel decision, *Brooks Furniture Manufacturing, Inc. v. Dutailier International, Inc.*, 393 F.3d 1378 (Fed. Cir. 2005), the Federal Circuit articulated the current exceptional case test under Section 285. Under that decision, absent litigation misconduct, willful infringement, or inequitable conduct before the USPTO, sanctions may be imposed only if both (1) the litigation is brought in subjective bad faith, and (2) the litigation is objectively baseless.[4] *Id.* at 1381. The Federal

---

[3] Likewise, a district court ruling based on a clearly erroneous view of the applicable law is "necessarily" an abuse of discretion. *Id.* at 405.

[4] This test to determine whether a case is "exceptional" within the meaning of Section 285 is currently under review by this Court in *Octane Fitness, LLC v. Icon Health & Fitness, Inc.*, No. 12-1184. AIPLA has concurrently filed an *amicus* brief in

Circuit has subsequently emphasized that the "objective baselessness" analysis includes "the totality of the circumstances surrounding not just the initial allegations of infringement, but the maintenance of those claims throughout the litigation." *See, e.g., Synthes USA, LLC v. Spinal Kinetics, Inc.*, --F.3d --, 2013 WL 5788675 (Fed. Cir. Oct. 29, 2013).

In *Highmark*, the Federal Circuit departed from its long-standing abuse-of-discretion review standard and held for the first time that *de novo* review applies to a district court's determination of objective baselessness—even though the rest of the determination (including the bad-faith prong of the *Brooks Furniture* test) is reviewed for clear error. 687 F.3d at 1300. This extension of *de novo* review to a district court's determination of objective baselessness of a party's claim or defense—in cases over which the district court may have presided for years—cannot be reconciled with the statute, this Court's precedents, or the policy behind Section 285.

II. The Text of Section 285 and its Legislative History Support Deferential Review of a District Court's Exceptional Case Determination.

Section 285 provides that "[t]he ***court*** in exceptional cases ***may*** award reasonable attorney fees to the prevailing party." 35 U.S.C. § 285

---

that case, seeking the return to a "totality-of-the-circumstances" test for exceptional case determinations under Section 285. *See* Section III.D, *infra*.

(emphasis added). Because the statute provides that the court ***may*** award fees in an exceptional case, the language unmistakably contemplates the exercise of discretion on the part of the district court. *See Christiansburg Garment Co. v. EEOC*, 434 U.S. 412, 416 n.7 (1978) (explaining that statutes providing that the court may award fees "entrust[] the effectuation of the statutory policy to the discretion of the district courts.").

The legislative history confirms Congress's intent to confer discretion upon the district court in deciding whether to award attorneys' fees. The legislative authorization for an award of attorneys' fees in patent cases was first codified in 1946. Pub. L. No. 587, 60 Stat. 778 (codified at 35 U.S.C. § 70 (1946)). Section 70 of the Patent Act provided that "[t]he court may in its discretion award reasonable attorney's fees to the prevailing party upon the entry of judgment on any patent case." *Id.*

The House bill provided for "reasonable attorneys fees to be fixed by the court." H.R. 5231, 79th Cong. (1946). *See Recovery in Patent Infringement Suits: Hearing on H.R.* 5231 *Before the Comm. on Patents*, 79th Cong. 10-14 (1946); H.R. Rep. No. 1587, at 1 (1946); H.R. Rep. No. 1587, Part 2, at 1 (1946). The Senate amended the bill to emphasize that "the provision relating to attorney's fees is made discretionary with the court." S. Rep. No. 1503 (1946), *reprinted in* 1946 U.S. Code Congressional Service 1386, 1387. As enacted, Section 70 of the Patent Act provided that "[t]he court may in its discretion award reasonable

attorney's fees." Pub. L. No. 587, 60 Stat. 778 (codified at 35 U.S.C. 70 (1946)).

In 1952, as part of a general movement to revise and codify the laws of the United States, the patent laws were restated and codified with the passage of the Patent Act of 1952. *See* P.J. Federico, *Commentary on the New Patent Act*, 75 J. Pat & Trademark Off. Soc'y 161, 166 (1993). Section 70, recodified as Section 285, was amended to recite the current language of the statute: "[t]he ***court*** in exceptional cases ***may*** award reasonable attorney fees to the prevailing party." Pub. L. No. 82-593, 1952 U.S.C.C.A.N. 753, 772 (66 Stat. 792, 813) (emphasis added). The legislative history of the 1952 Act underscores that this amendment was not intended to alter the meaning of the statute or diminish the discretion afforded to district courts. P.J. Federico, *supra*, at 216.[5] Thus, as courts interpreting the provision recognized, the 1952

---

[5] Federico was one of the 1952 Act's original drafters. His commentary was included in the annotated version of volume 35 of the U.S. Code for many years, and when the West Publishing Company ended this practice it was reprinted in the Journal of the Patent and Trademark Office Society. *See generally* Harold C. Wegner, *The Disclosure Requirements of the 1952 Patent Act: Looking Back and a New Statute for the Next Fifty Years*, 37 Akron L. Rev. 243, 243 n.1 (2004). Federico's commentary was reviewed by the other drafters of the 1952 Act prior to its publication and the Federal Circuit has referred to Federico's commentary as "an invaluable insight into the intentions of the drafters of the Act." *Symbol Techs., Inc. v. Lemelson Med.*, 277 F.3d 1361, 1366 (Fed. Cir. 2002).

amendment did not alter the discretionary nature of fees awards. *See Hoge Warren Zimmerman Co. v. Nourse & Co.*, 293 F.2d 779, 783 (6th Cir. 1961) (The 1952 amendment "has not done away with the discretionary feature.").

Early decisions by courts of appeals interpreting the statute and its legislative history consistently held that Section 285 confers discretion on the district court to award attorneys' fees and, for that reason, applied a deferential standard of review. For example, in *National Brass Co. v. Michigan Hardware Co.*, a court considered whether an award was "dictated by equity and good conscience" and denied fees because the case "was the usual and ordinary suit for infringement" and "[t]here appear to be no special circumstances and no equitable considerations which would justify an award." 75 F. Supp. 140, 142 (W.D. Mich. 1948). *See also Dubil v. Rayford Camp & Co.*, 184 F.2d 899, 903 (9th Cir. 1950) (applying abuse of discretion standard); *Dixie Cup Co. v. Paper Container Mfg. Co.*, 174 F.2d 834, 836 – 37 (7th Cir. 1949) (applying abuse of discretion standard). The federal appellate courts continued to apply a deferential standard after the adoption of the 1952 Act.[6] *See, e.g, Hoge Warren Zimmermann Co.*, 293 F.2d at 783.

---

[6] Application of deferential review to district courts' fee determinations is in accord with the great weight of regional circuit court authority regarding the standard of review for fee determinations under the Lanham Act. Like Section 285 of the Patent Act, Section 35(a) of the Lanham Act states that "[t]he

Indeed, from its creation in 1982 until this year, the Court of Appeals for the Federal Circuit consistently afforded deferential review to district courts' determinations under Section 285. *See, e.g.*, *Superior Fireplace Co. v. Majestic Prods. Co.*, 270 F.3d 1358, 1376 (Fed. Cir. 2001) ("The determination of whether a case is exceptional, and, thus, eligible for an award of attorney fees under § 285 is a factual determination reviewed for clear error. The subsequent determination of whether attorney fees are appropriate is reviewed for an abuse of discretion."); *Brooktree Corp. v. Advanced Micro Devices*, 977 F.2d 1555, 1582 (Fed. Cir. 1992) ("The award of attorney fees is within the informed discretion of the trial court"); *Bayer Aktiengesellschaft v. Duphar Int'l Research B.V.*, 738 F.2d 1237, 1242 (Fed. Cir. 1984) (holding that an award of fees "cannot be overturned unless the district court abused its discretion, or made its

---

court in exceptional cases may award reasonable attorney fees to the prevailing party." *See* 15 U.S.C. § 1117(a).

The clear weight of regional circuit authority applying the Lanham Act holds that a district court's fee determinations are subject to deferential review. *See, e.g.*, *Twin Peaks Prods. v. Publ'ns Int'l, Ltd.*, 996 F.2d 1366, 1383 (2d Cir. 1993); *Securacomm Consulting, Inc. v. Securacom*, 224 F.3d 273, 279 (3d Cir. 2000); *Retail Servs. v. Freebies Publ'g*, 364 F.3d 535, 550 (4th Cir. 2004); *Procter & Gamble Co. v. Amway Corp.*, 280 F.3d 519, 527 (5th Cir. 2002); *Johnson v. Jones*, 149 F.3d 494, 503 (6th Cir. 1998); *S Indus. v. Centra 2000*, 249 F.3d 625, 627 (7th Cir. 2001); *Hartman v. Hallmark Cards, Inc.*, 833 F.2d 117, 123 (8th Cir. 1987); *Lipscher v. LRP Publs., Inc.*, 266 F.3d 1305, 1319-20 (11th Cir. 2001); *Reader's Digest Ass'n, Inc. v. Conservative Digest*, 821 F.2d 800, 808 (D.C. Cir. 1987).

determination with an erroneous conception of the law" (internal citation omitted)).

Under the abuse-of-discretion standard, the appellate court's review of the trial court's decision is set aside only where it is based on an erroneous view of the law or clearly erroneous findings of fact. *Cooter & Gell v. Hartmarx Corp*, 496 U.S. 384, 405 (1990). The long tradition of affording deferential review to district courts' fee determinations under Section 285 is consistent with the statutory language, legislative history, and early circuit court precedent recognizing the district courts' discretion in making exceptional case determinations, including both their determinations as to the objective baselessness of claims and their awards of attorneys' fees.

III. The Federal Circuit's Recent Substitution of *De Novo* Review Conflicts with this Court's Precedent Mandating Deferential Review of District Courts' Fee Awards.

A. This Court's decisions in *Pierce* and *Cooter* mandate deferential review of all aspects of district courts' determinations under Section 285.

For decades, this Court has held that appellate courts should apply the abuse-of-discretion standard to district court fee awards. In *Pierce v. Underwood*, this Court considered the standard of review for a district court's award of fees under the Equal Access to Justice Act ("EAJA"), 28 U.S.C. § 2412, which provides for payment of fees to a prevailing party

unless the court determines that the government's position is "substantially justified." 487 U.S. 552, 555 (1988). Noting that "[i]t is ***especially common for issues involving*** what can broadly be labeled ***'supervision of litigation' ... to be given abuse-of-discretion review,"*** this Court held that abuse-of-discretion review applied to the question whether the government's position was substantially justified. *Id.* at 559 (emphasis added).

The Court explained that several considerations warranted a deferential standard of review in this context. *Id.* First, the Court noted that the statutory language itself suggested a measure of deference to the district court on appeal. *Id.* The Court then considered whether "one judicial actor is better positioned than another to decide the issue in question." *Id.* at 560. It observed that whether a position is substantially justified will often "turn upon not merely what the law is, but what was the evidence regarding the facts." *Id.* "[T]he district court may have insights not conveyed by the record, into such matters as whether particular evidence was worthy of being relied upon, or whether critical facts could easily have been verified ...." *Id.* In the circumstances where the district court's full knowledge can be acquired by the appellate court, that would require the appellate court's review of the entire record at unusual expense. *Id.*

Even as to legal questions surrounding an award of fees under the EAJA, the Court noted that the question is "not what the law now is, but what the Government was substantially justified in believing it to have been." *Id.* at 561. Under the

circumstances, any development in the law on *de novo* review would occur in a "most peculiar, secondhanded fashion" and could encourage needless merits appeals. *Id.* Finally, the Court noted that the question was "such a multifarious and novel question, little susceptible, for the time being at least, of useful generalization." *Id.* at 562-63.

In the second case, *Cooter & Gell v. Hartmarx Corp.*, 496 U.S. 384 (1990), this Court applied the considerations discussed in *Pierce* to the review of a Rule 11 determination. The Court rejected the proposition that legal conclusions underlying a district court's award of sanctions under Rule 11 should be reviewed *de novo*. Instead, the Court held that a "unitary abuse-of-discretion standard [applies] to all aspects of a Rule 11 proceeding." *Id.* at 403. The Court reasoned that, like the "substantially justified" determination considered in *Pierce*, a district court's determination for Rule 11 purposes that a party's position is "factually well grounded and legally tenable" is fact-specific. *Id.* The district court is "better situated than the court of appeals to marshal the pertinent facts and apply the fact-dependent legal standard." *Id.* at 402.

The Court also explained that only deferential review would grant the district court "the necessary flexibility to resolve questions involving multifarious, fleeting, special, narrow facts that utterly resist generalization." *Id.* at 404. Moreover, because Rule 11 requires the court to make "fact-intensive, close calls" that are "little susceptible ... of useful generalization," district court's fact-bound resolutions cannot be made uniform through

appellate review. As in the EAJA context, an appellate court's *de novo* review of Rule 11 decisions would not "establish clear guidelines" for lower courts or "clarify the underlying principles of law." *Id.* at 405.

This Court's decision in *Professional Real Estate Investors, Inc. v. Columbia Pictures Industries, Inc.* ("*PRE*"), 508 U.S. 49 (1993) did not alter the analytical framework set forth in *Pierce* and *Cooter* for fee cases. The *PRE* case involved an appeal of the grant of summary judgment under the doctrine of antitrust immunity. Defining the "sham litigation" exception to the doctrine of antitrust immunity, this Court held that litigation is not a "sham" unless it is objectively baseless. 508 U.S. at 62. Because there were no facts in dispute, this Court concluded that a court could decide the issue of probable cause—an absolute defense to liability—as a matter of law. *Id.* Under such circumstances, there was no need for a jury to determine whether the complainant had actual malice, and no opportunity for the jury to infer the absence of probable cause from a finding of malice. *Id.* The *PRE* Court did ***not*** hold that an objective baselessness determination in any context must be reviewed *de novo*, even when the material facts are disputed. Nor did the *PRE* Court call into question the *Cooter* and *Pierce* framework applicable in the context of fee awards.

B. As in *Cooter* and *Pierce*, the district court is best positioned to decide "objective baselessness."

The reasons for deferential review of district court fee determinations set forth in *Cooter* and *Pierce* apply equally in patent cases involving Section 285 fee determinations. The question of objective baselessness is not a legal inquiry into whether a litigant's position was incorrect as a matter of law. Rather, it calls on the trial court to assess whether a reasonable attorney would view the litigant's position to be without merit under the circumstances. This requires an understanding of the litigant's evolving knowledge of the facts over the course of the entire litigation as well as any changes in the applicable law over that time.

The court must analyze the reasonableness of the litigant's legal position during the period when that position was advanced and maintained, as well as the evidentiary basis for that position and the development of evidence over the course of the litigation. This fact-intensive inquiry often requires the district court to assess the testimony and credibility of witnesses on topics ranging from infringement testing to the meaning of claim terms. The district court also must evaluate the strength and availability of evidence during the course of the proceedings in light of the state of the law at the time. As a result, a district court's determination of objective baselessness, including the maintenance of claims throughout the litigation, is a fact-intensive inquiry that the trial judge is best positioned to decide. Moreover, the district court is less likely to

be affected by hindsight bias than is an appellate court reviewing a cold record at a single point in time.

Analyzing the reasonableness of a party's position over the course of litigation is complicated, as recognized by this Court in *Pierce*. *Pierce*, 487 U.S. at 560. This is particularly true in patent cases, which commonly involve lengthy proceedings, voluminous discovery, and the application of evolving substantive law. In many districts, specialized local patent rules, varying considerably from district to district, have been developed to help manage costs and streamline cases. *See, e.g.*, D. Minn. L. R., 2005 Patent Advisory Committee's Preface (explaining that district's local patent rules are designed to "ease, simplify, and reduce the cost" of patent cases, which are "frequently complex."); *see also* James Ware & Brian Davy, *The History, Content, Application and Influence of the Northern District of California's Local Patent Rules*, 25 Santa Clara Computer & High Tech. L.J. 965, 1019-1031 (2009) (noting considerable variation across the districts).

Some districts' local rules require early disclosure of "core documents" about the asserted patents and accused products, along with detailed infringement and invalidity contentions which may be amended thereafter only by leave of court upon a showing of "good cause."[7] Some districts mandate

---

[7] *See, e.g.*, *id.* at 993 (explaining that Northern District of California local rules require early disclosure of invalidity and infringement contentions and do not permit amendment of

early *Markman* (claim construction) hearings, while other districts allow for *Markman* hearings after the close of discovery.[8]

Even with the adoption of local patent rules, the median time to trial is 2.5 years, with a slight trending upward since 2004. PricewaterhouseCoopers, *2012 Patent Litigation Study* 21 (2012), *available at* http://www.pwc.com/en_US/us/forensic-services/publications/assets/2012-patent-litigation-study.pdf. Because the trial judge has presided over the case—from pleadings to discovery through dispositive motions and trial—and the lawyers for the parties have appeared before her for an extended period, she will have vast, hands-on knowledge that will never appear in the appellate record, including evaluations of the credibility of attorneys and witnesses and knowledge of how the proceedings unfolded. *See Pierce*, 487 U.S. at 560. She also will have

---

those contentions absent good cause); *see also id.* at 1006 (explaining that the Eastern District of Texas permits a party to amend its contentions without leave only when the party believes the court's claim construction ruling so requires); E.D. Tex. P.R. 3-6(a) and(b).

[8] *Compare* N.D. Cal. Patent L.R. 4-3 (2010) (requiring submission of joint claim construction and prehearing statement not later than 60 days after service of invalidity contentions), *and* 4-4 (closing discovery relating to claim construction 30 days after service of joint claim construction and prehearing statement), *with* N.D. Ill. Local Patent Rules, Preamble (noting the decision in the Northern District of Illinois to place claim construction near the end of fact discovery).

familiarity with the application of the local rules and unique ability to evaluate the impact of those rules on an objective baselessness determination.

For example, a judge in a district requiring early, detailed invalidity contentions may be inclined to view a patentee's continued pursuit of a claim as unjustified and objectively baseless after the identification of clearly invalidating prior art in the invalidity contentions. A judge in a different district that does not require early disclosure of invalidity contentions may be less disposed to view early stage positions as objectively baseless. The analysis may be impacted by the level of detail provided in the invalidity contentions (as compared to the normal practice in the district) as well as the subsequent availability of expert witness testimony explaining the relevance of the prior art to the claims of the patent in suit. Clearly, the district court is in the best position to assess the reasonableness of a party's positions in light of the law at the time and as the facts evolve over the course of discovery. *See Pierce*, 487 U.S. 552, 559 (issues involving what can broadly be labeled "supervision of litigation'" are commonly given abuse-of-discretion review).

As another example, in a case where a plaintiff's infringement claim hinges on testing results proffered by its expert and a declaration by that expert defeated summary judgment of non-infringement, the trial judge may have unique insight into the basis for the infringement claim based on its observation of the testing expert's testimony and demeanor on direct and cross-examination at trial. The Federal Circuit—faced

with only a "cold record"—can never replace the district court's ability to assess whether the plaintiff's claim and its reliance on those tests was baseless.

The Federal Circuit has recognized the unique position of the district courts in making exceptional case determinations, recognizing that it has "only the briefs and the cold record, and with counsel appearing before us for only a short period of time" and is "not in the position to second-guess the trial court's judgment." *Eon-Net LP v. Flagstar Bancorp*, 653 F.3d 1314, 1324 (Fed. Cir. 2011). In 1992, the Federal Circuit similarly observed:

> For fee-shifting issues particular deference is due to the trial judge, who has the opportunity to observe those intangibles missing from the appellate record. The trial court is in the best position to evaluate the conduct of the parties throughout the period of patent infringement, and to allocate the burdens of litigation commensurate with the interest of justice.

Brooktree Corp. v. Advanced Micro Devices, 977 F.2d 1555, 1582 (Fed. Cir. 1992).

A long line of Federal Circuit precedent acknowledges the fact-intensive nature of this inquiry and the deference that should be accorded a district judge's exceptional case determination, including on the question of objective baselessness. *See, e.g.*, *Cybor Corp. v. FAS Techs., Inc.*, 138 F.3d 1448, 1459 (Fed. Cir. 1998) ("[T]he district court

must determine whether a case is exceptional, a factual determination reviewed for clear error."); *Eltech Sys. Corp v. PPG Indus., Inc.*, 903 F.2d 805, 811 (Fed. Cir. 1990) ("OxyTech has not persuaded us that the court's exceptional case finding based on all the circumstances cited by the court was clearly erroneous."); *ICU Med., Inc. v. Alaris Med. Sys., Inc.*, 558 F.3d 1368, 1380 (Fed. Cir. 2009) (district court's exceptional case finding affirmed where the court did not clearly err in finding claims objectively baseless); *Computer Docking Station Corp. v. Dell, Inc.*, 519 F.3d 1366, 1380 (Fed. Cir. 2008) ("The district court's finding that the action was not objectively baseless was not clearly erroneous.").

This line of cases conformed to this Court's holdings in *Pierce* and *Cooter*. Like appellate review of the fact-bound determinations at issue in *Pierce* and *Cooter*, *de novo* review of objective baselessness would require the Federal Circuit to "undertake the unaccustomed task of reviewing the entire record, not just to determine whether there existed the usual minimum support for the merits determination made by the factfinder below, but to determine whether urging of the opposite merits determination" was objectively baseless. *Pierce*, 487 U.S. at 560. The district court, with its "full knowledge of the factual setting" and "insights not conveyed by the record," is far better positioned to conduct the necessary inquiry and evaluate the merits of the entire litigation. *Id.*

The Federal Circuit's change of course as to the standard of review overemphasized the role of claim construction in analyzing objective baselessness,

assuming that the scope of the patent claims is unknown until the district court's ultimate *Markman* ruling and perhaps the appellate court's review of that ruling. That reasoning oversimplifies and unduly narrows the objective baselessness inquiry.

While claim interpretation is often relevant to the inquiry, determining objective baselessness depends not on the ultimate claim construction, but on whether a reasonable attorney would believe that a particular construction had factual or legal basis. In other words, the question for purposes of Section 285 is whether the construction advanced by a litigant falls within ***a range*** of possible constructions that were reasonable under existing law and facts at the time. These questions are not abstract inquiries to district judges, who will often have lived with the case for years and will have watched the parties' positions develop and evolve over the course of that time. Under these circumstances, the district judge is the judicial actor best able to evaluate objective baselessness.

Moreover, many fee awards turn on issues wholly independent of claim construction. These include, among others: pre-suit investigations of the accused product (and the reasonableness of those investigations under the factual circumstances, including the credibility of fact witnesses); knowledge of the accused product's features and when that knowledge was obtained; the credibility of testimony regarding testing of the accused product in light of the patent claims; prior art disclosures identified during the course of litigation (including

prior invention by others under 35 U.S.C. § 102(g)); facts supporting an inequitable conduct claim that were not previously known to the current patent holder; and the credibility of expert witnesses' testimony on the issues of infringement and invalidity. *See, e.g.*, *Eltech Sys. Corp.*, 903 F.2d at 810-11 (affirming award of fees based on inadequate testing and lack of credibility of expert testimony on infringement).

C. As in *Cooter* and *Pierce*, the objective baselessness inquiry resists generalization that might otherwise support a less deferential review.

As in the Rule 11 context, determining objective baselessness requires district courts "to resolve questions involving multifarious, fleeting, special, narrow facts that utterly resist generalization." *Cooter*, 496 U.S. at 404. The court's determination depends on the court's assessment of all the facts and circumstances of the case. For example, a determination that an infringement allegation in one case was baseless in view of particular test results or the credibility of expert witnesses offers little or no insight into whether an infringement allegation in another case is objectively baseless. Similarly, a determination that an asserted claim construction was objectively baseless in the face of particular evidence and the state of law at one point in time offers no insight into whether an asserted claim construction in a different case will fall within the range of reasonable constructions under the facts and state of the law at a different time.

Because these decisions are inherently fact-bound, *de novo* review cannot "assure uniformity in the treatment of patent litigation, insofar as reasonableness is the governing issue." *Highmark*, 701 F.3d at 1356. As this Court has recognized, "[a]n appellate court's review of whether a legal position was reasonable ... ***under the circumstances*** is unlikely to establish clear guidelines for lower courts nor will it clarify the underlying principles of law." *Cooter*, 496 U.S. at 405 (emphasis added); *see also Pierce*, 487 U.S. at 562.

The Federal Circuit's characterization of objective baselessness as a "question of law based on underlying mixed questions of law and fact" does not justify *de novo* review and runs contrary to this Court's precedent. *Highmark*, 687 F.3d at 1309. Before *Cooter*, some circuit courts applied different standards of review to different issues in Rule 11 proceedings and refused to defer to district court's conclusions on mixed questions on fact and law. 496 U.S. at 401. Noting the difficulty of distinguishing between factual findings and legal conclusions, this Court flatly rejected that approach. Instead, the Court held that abuse-of-discretion review applied to all aspects of a district court's ruling in Rule 11 proceedings. *Id.* at 401; *see also Miller v. Fenton*, 474 U.S. 104, 114 (1985) ("[T]he fact/law distinction at times has turned on a determination that, as a matter of the sound administration of justice, one judicial actor is better positioned to decide the issue in question."). The logic of *Cooter* applies equally in the context of an award of fees under Section 285.

The *Highmark* court's reliance on the Federal Circuit's earlier willfulness precedent, *Bard Peripheral Vascular, Inc. v. W.L. Gore & Associates, Inc.*, 682 F.3d 1003 (Fed. Cir. 2012), is misguided. The *Bard* decision concerns a different issue, and it does not trump the analytical framework established by this Court in *Cooter* and *Pierce*.

In *Bard*, the Federal Circuit clarified the legal standard for the objective prong of its two-prong test for proof of willful infringement and stated that this prong implicates a question of law for the district court to decide, subject to *de novo* appellate review. 682 F.3d at 1006-7.[9] The court focused largely on the proper allocation of decision-making between the district court judge and the jury, not between the district court and the appellate court. *See id.* at 1006-8. Determining whether a question is one for the trial court or the jury is distinct from the question of the appropriate standard of review on appeal. In its brief discussion of the standard of

---

[9] Section 284 provides that "the court may increase damages up to three times the amount found or assessed." 35 U.S.C. § 284. Under Federal Circuit precedent, the court may award such enhanced damages if the court finds willful infringement. *Bard*, 682 F.2d at 1005. The Federal Circuit's two-prong test for willful infringement requires a threshold showing that the infringer acted "despite an objectively high likelihood that its actions constituted infringement of a valid patent." *Id.* After satisfying the objective standard, the patentee must "demonstrate that this objectively-defined risk ... was either known or so obvious that it should have been known to the accused infringer." *Id.* (internal quotations and citation omitted).

review, a question it did not need to reach as part of its order vacating and remanding to the district court, the court suggested, without explanation, that there is a need for unified precedent in the context of willful infringement decisions. *Id.* at 1008. In the Section 285 context, by contrast, the inquiry into objective baselessness involves analysis of a range of reasonable positions that may be have been formulated based upon known facts and the state of the law at a different points in time over the course of years of litigation. This fact-intensive, equity-focused inquiry renders elusive any quest for unified precedent.

The large size of fee awards, another factor cited by the *Highmark* court, does not justify *de novo review*. *See Highmark*, 687 F.3d at 1310 n.1. The amount at stake would only weigh in favor of *de novo* review if the appellate court were in a position to make a more reliable decision, or were at least equally well-suited to decide the issue as the district court. In the context of Section 285, the magnitude of some awards reflects the amount at stake, the complexity of the issues, and how intensely the case has been litigated. These considerations only reinforce how difficult, if not impossible, it will be for the appellate court to obtain the knowledge acquired by the district court in the course of multiple hearings over years of litigation. *De novo* review under these circumstances would only heighten the odds that fee awards will be upset on appeal, discouraging trial judges from exercising their authority under Section 285 in the first place and increasing the likelihood that prevailing litigants

will bear the burden of unreasonably and unnecessarily costly patent litigation.

Returning to an abuse-of-discretion standard does not mean that the district court's decision will go unreviewed, or that mistakes of fact or law will be overlooked on appeal. As this Court has noted, a district court would "necessarily abuse its discretion if it based its ruling on an erroneous view of the law or on a clearly erroneous assessment of the evidence." *Cooter*, 496 U.S. at 405. The deferential standard simply recognizes that the district court is in the best position to decide the question, and its determination should not be easily second-guessed based upon review of the cold record by a judicial actor far removed from events as they unfolded.

D. Under the *Cooter* and *Pierce* framework, the return to a more flexible test for the district court's exceptional case determination would appropriately be reviewed under an abuse-of-discretion standard.

AIPLA appreciates that the test for exceptional case articulated in *Brooks Furniture Manufacturing Inc. v. Dutailier International, Inc.*, 393 F.3d 1378 (Fed. Cir. 2005), is under review by this Court in the pending case *Octane Fitness, LLC v. Icon Health & Fitness, Inc.*, 12-1184. Should this Court reject the *Brooks Furniture* test in favor of a more flexible approach, as proposed by AIPLA in its concurrently-filed *amicus* brief in that case, the reasons for deferential review of district court fee determinations will be even stronger. Adoption of a more flexible test that examines the totality of the

circumstances will require district courts to weigh multiple factors and reach an equitable result. In view of the district court's "full knowledge of the factual setting," that court is far better positioned than an appellate court to make an equitable determination based on the entire record. *Pierce*, 487 U.S. at 561.

A flexible test based upon multiple factors and equitable considerations is simply not susceptible to useful generalization by a court of appeals. A totality-of-the-circumstances test will by definition be limited to the circumstances of a particular case, and *de novo* review of any or all aspects of such a determination will offer no insight into whether fees are appropriate in a different case litigated under different circumstances.

If, in *Octane*, this Court endorses a flexible test under which objective baselessness is one of many considerations, *de novo* review of objective baselessness would "distort the appellate process" by encouraging satellite litigation around the application of that test to a particular case, often requiring the review of an extensive record. Appellate litigation of this nature would not advance the law, nor would it enhance the reliability of fee determinations. Moreover, a flexible test is "likely to profit from the experience that an abuse-of-discretion rule will permit to develop." *Id.* at 562 (explaining that application of an abuse-of-discretion standard to a question not susceptible to generalization will permit needed flexibility for district courts).

IV. Deferential Review of Exceptional Case Determinations Will Advance the Policy Goals of Section 285 by Enhancing the Deterrence Function of the Statute.

Patent cases routinely cost millions of dollars to litigate. AIPLA's bi-annual economic survey reveals that the median cost of a patent infringement action ranges from $2 million for a case with $1 million to $10 million at risk up to $5.5 million for cases with more than $25 million at risk. Am. Intellectual Property Law Ass'n, *Report of the Economic Survey* 34 (2013). Indeed, in a 2010 Study for the Federal Judicial Center, it was noted that intellectual property cases report costs almost 62% higher than baseline categories of cases. Emery G. Lee & Thomas E. Willging, Fed. Judicial Ctr., *Litigation Costs in Civil Cases: Multivariate Analysis* 8 (2010), *available at* http://www.fjc.gov/public/pdf.nsf/lookup/costciv1/$file/.

When a patent holder pursues a meritless case, when an accused infringer asserts meritless defenses to avoid accountability, or when any party uses "scorched earth" litigation tactics to gain unfair settlement leverage in a litigation, the opposing party is forced to defend itself or enforce its statutory rights at "monstrous expense." *Mathis v. Spears*, 857 F.2d 749, 754 (Fed. Cir. 1988). An award of attorneys' fees under Section 285 serves to deter litigants from such abusive and improper litigation practices. *See id.* ("Provisions for increased damages under 35 U.S.C. § 284 and attorney fees under 35 U.S.C. § 285 are available as deterrents to blatant, blind, willful infringement of valid patents. The only

deterrent to the equally improper bringing of clearly unwarranted suits on obviously invalid or unenforceable patents is Section 285.").

This deterrence goal is best served by deferential review of district courts' fee determinations. An abuse-of-discretion standard communicates to the district court and the parties that the court has broad authority to award fees where necessary to prevent injustice and undue expense. By contrast, if the Federal Circuit reviews district judges' findings of objective baselessness *de novo,* it removes authority from the judicial actor best positioned to make the fact-based determinations at issue.[10] *See supra* Section III.B.

---

[10] Because Section 285 rests on equitable principles of justice and fairness, the district court's discretionary fee determinations should be afforded the same deference that is afforded to other remedial decisions in equity. *See, e.g., Chambers v. Nasco, Inc.*, 501 U.S. 32, 55 (1991) ("We review a court's imposition of sanctions under its inherent power for abuse of discretion."). As leading treatise explains:

> The district court, when fashioning appropriate permanent relief for an injury found actionable and redressable, is sitting in equity. ... [T]he scope of a district court's equitable powers to remedy past wrongs is broad, for breadth and flexibility are inherent in equitable remedies.'

1 Steven Alan Childress & Martha S. Davis, *Standards of Review* § 4.16 (4th ed. 2010) (quoting *Swann v. Charlotte-Mecklenburg Bd. of Educ.*, 402 U.S. 1, 15 (1971)).

A deferential standard of review also enhances the deterrence goal by creating greater certainty earlier in the course of a prolonged litigation. When litigants know that a district court is empowered to award fees for the continued pursuit of baseless claims and that the award is likely to stand on appeal, they will be encouraged to settle those claims and avoid fees. By contrast, the expectation that a district court's fee award can be relitigated before the appellate court increases uncertainty and only emboldens those who are inclined toward abusive litigation practices, by encouraging appeals and reducing the litigant's apprehension that the district court will issue a fee award that withstands appellate review. *Cf. National Hockey League v. Metropolitan Hockey Club*, 427 U.S. 639, 643 (1976) (recognizing that overturning a sanction of dismissal would lead litigants in other cases to feel freer to flout discovery orders of other courts).

V. This Court's Reaffirmation of the District Courts' Discretionary Authority Under Section 285 and the Deferential Standard of Review Will Help Guide District Courts in Managing Abusive Litigation Tactics.

The past decade has seen rising concern in the profession that the patent system is vulnerable to abuses by parties who pursue frivolous claims or defenses or otherwise attempt to use the high cost (in terms of both time and money) of patent litigation as a business strategy. As Chief Judge Rader of the Court of Appeals for the Federal Circuit admonished at the 2011 Judicial Conference of the Eastern District of Texas—a district having one of

the highest rates of patent complaint filings: "[w]e need to ensure that patent law continues to serve its purpose of fostering innovation and that ***patent litigation does not become an unwieldy, unpredictable, and unaffordable burden on innovation.***" Randall R. Rader, *The State of Patent Litigation*, 21 Fed. Cir. B.J. 331, 345 (2011) (emphasis added).

Indeed, there are multiple bills pending before Congress today proposing various new tools to address perceived patent litigation abuses, including fee-shifting provisions and other procedures to dictate the courts' handling of patent cases. AIPLA respectfully suggests that the courts need not await legislative solutions to perceived flaws that can be constructively addressed through existing case management tools, including Section 285.

To restore the balance between patent enforcement litigation that fosters innovation and that which imposes undue burdens on it, AIPLA urges this Court to (1) reaffirm the discretionary authority afforded the district courts to make exceptional case determinations and award fees under existing law and (2) clarify the deferential standard of review applicable to those determinations on appeal. Section 285 already gives district judges the authority they need to curtail litigation abuse. However, as Chief Judge Rader has noted, they exercise that authority only rarely today. The data show that, in 2011, fees were shifted under Section 285 in only 20 cases annually out of nearly 3,000 patent cases filed. Randall R. Rader et al., *Make Patent Trolls Pay in Court*, N.Y. Times, June

4, 2013, at A25. District judges' reluctance to shift fees under Section 285 will only grow if the *de novo* standard of review were legitimized by this Court and they were to face even greater likelihood of reversal on appeal.

In recent years, in the face of public and sometimes legislative debate, this Court's articulation and reaffirmation of basic legal principles has often altered the conduct of patent litigation and role of the federal bench.

In the mid-2000s, for example, there were growing concerns about the development of a new industry in which the assertion of patents was directed primarily to obtaining licensing fees. While patent licensing has long contributed to the dissemination of ideas and the commercialization of new technologies, in some cases these patent assertion entities used the threat of an injunction "as a bargaining tool to charge exorbitant fees to companies that seek to buy licenses to practice the patent." *eBay Inc. v. MercExchange, L.L.C.*, 547 U.S. 388, 396-97 (2006) (Kennedy, J., concurring). This Court reaffirmed that traditional principles of equity apply to the district courts' grant of injunctive relief in patent cases no less than in other cases, reversing the Federal Circuit's presumptive rule that a patentee was entitled to injunctive relief except in unusual cases.

Following this Court's guidance, district courts no longer presumed irreparable injury to the patent owner and instead, in weighing the arguments for an injunction, balanced such factors as whether the

patent owner was facing actual competition from the infringer and whether an adequate remedy at law existed to remedy the infringement. This Court's decision had a palpable effect on the district courts' conduct of patent litigation: prior to *eBay*, the district courts granted permanent injunctions in 84% of patent cases in which the patent holder prevailed. Robert M. Isackson, *After 'eBay,' Injunctions Decrease*, 30 Nat'l L. J., Dec. 3, 2007 at S1. As of early December 2011, that figure had declined to 75%. Stevan D. Porter, Jr., *Post-Ebay Economic Standards for Assessing Irreparable Harm*, 94 J. Pat. & Trademark Off. Soc'y 250, 251 (2011). After *eBay*, the existence of actual competition between the parties has been a defining feature in cases where injunctive relief was granted. *Id.* In most of the remaining cases in which injunctive relief was denied, by contrast, the patent holder was described as a non-practicing entity. *Id.*

As another example, in 2007, at a time when concerns were being expressed about patent quality in technologies where there is little traditional published prior art, this Court clarified the standard for determining obviousness. In rejecting the rigid "Teaching/Suggestion/Motivation" test and returning to a flexible, common sense approach, this Court noted that "[t]he diversity of inventive pursuits and of modern technology counsels against limiting the analysis ... ." *KSR Int'l Co. v. Teleflex Inc.*, 550 U.S. 398, 419 (2007). In *KSR*, the Court also affirmed that summary judgment is an appropriate vehicle to resolve obviousness where the content of the prior art, the scope of the patent claim and the level of ordinary skill in the art are not in material dispute.

Id. at 427. After *KSR*, the percentage of cases in which district courts granted summary judgment of obviousness rose markedly from 12% to 26%. *See* Greg Upchurch, *Effect of KSR on Summary Judgment Decisions on Obviousness*, www.legalmetric.com/presentations/ksr_summary_judgment_obviousness.ppt (last visited Nov. 15, 2013).

In sum, this Court plays an instrumental role in shaping and guiding the actions and attitudes of the federal bench in their efforts to manage patent litigation. By reaffirming the district courts' discretion in making exceptional case determinations, this Court can reinvigorate Section 285 as a case management tool to reign in abusive litigation conduct by parties in patent disputes. AIPLA urges the Court to take this opportunity to help manage and alleviate the costs of patent litigation and reduce the burden on our over-taxed federal district courts.

CONCLUSION

For the foregoing reasons, AIPLA respectfully requests that the Court overrule the Federal Circuit's application in *Highmark* of *de novo* review to the district courts' "objective baselessness" determination and require that all aspects of a district court's rulings under Section 285 be reviewed under the abuse-of-discretion standard.

Respectfully submitted,

WAYNE P. SOBON,
President
AMERICAN INTELLECTUAL
PROPERTY LAW
ASSOCIATION
241 18th Street, South
Suite 700
Arlington, VA 22202
(703) 415-0780

BARBARA A. FIACCO
Counsel of Record
DONALD R. WARE
STACY A. ANDERSON
FOLEY HOAG LLP
155 Seaport Boulevard
Boston, MA 02210
(617) 832-1000
bfiacco@foleyhoag.com

December 9, 2013

AMICUS CURIAE BRIEF

RECORD
AND
BRIEFS

Supreme Court, U.S.
FILED
DEC 9 - 2013
OFFICE OF THE CLERK

Nos. 12-1163, 12-1184

IN THE

Supreme Court of the United States

HIGHMARK INC.,

Petitioner,

v.

ALLCARE HEALTH MANAGEMENT SYSTEMS, INC.,

Respondent.

ON WRIT OF CERTIORARI TO
THE UNITED STATES COURT OF APPEALS
FOR THE FEDERAL CIRCUIT

OCTANE FITNESS, LLC,

Petitioner,

v.

ICON HEALTH & FITNESS, INC.,

Respondent.

ON WRIT OF CERTIORARI TO
THE UNITED STATES COURT OF APPEALS
FOR THE FEDERAL CIRCUIT

BRIEF OF APPLE INC. AS *AMICUS CURIAE* IN SUPPORT OF NEITHER PARTY

E. Joshua Rosenkranz
Christopher J. Cariello
ORRICK, HERRINGTON & SUTCLIFFE LLP
51 W. 52nd. St.
New York, NY 10019
(212) 506-5380
jrosenkranz@orrick.com

Mark S. Davies*
Justin P. Bagdady
ORRICK, HERRINGTON & SUTCLIFFE LLP
1152 15th Street
Washington, D.C. 20005
(202) 339-8631
mark.davies@orrick.com
**Counsel of Record*

Counsel for Amicus Curiae

Library of Congress
Law Library

TABLE OF CONTENTS

Page

TABLE OF AUTHORITIES iii

INTEREST OF THE *AMICUS CURIAE* 1

BACKGROUND 3

SUMMARY OF ARGUMENT 7

ARGUMENT 9

I. PATENT ASSERTION ENTITIES ARE THRIVING AT THE EXPENSE OF INNOVATORS 9

A. Patent Assertion Entities Are Thriving 10

B. Most Patent Assertion Entities Are Profiteers That File Strike Suits and Nuisance Suits to Obtain Undeserved Royalties From Innovators 14

II. COURTS SHOULD CONSIDER A BROAD ARRAY OF FACTORS WHEN EVALUATING MOTIONS FOR ATTORNEY'S FEES 21

A. The Test for Fee Shifting Should Take Into Account the Nature and Motivations of the Parties 23

B. The Test for Fee Shifting Should Take Into Account the Merits of the Parties' Positions 29

C. The Test for Fee Shifting Should Take Into Account Litigation Conduct 33

CONCLUSION 36

TABLE OF AUTHORITIES

Page(s)

Cases

Alyeska Pipeline Serv. Co. v. Wilderness Soc'y,
421 U.S. 240 (1975) 23

Atl. Works v. Brady,
107 U.S. 192 (1883) 15

Brooks Furniture Mfg., Inc. v. Dutailier Int'l, Inc.,
393 F.3d 1378 (Fed. Cir. 2005) 3

eBay Inc. v. MercExchange, L.L.C.,
547 U.S. 388 (2006) 6

Eon-Net LP v. Flagstar Bancorp,
653 F.3d 1314 (Fed. Cir. 2011) 28

Fogerty v. Fantasy, Inc.,
510 U.S. 517 (1994) 21, 22

Hartman v. Hallmark Cards, Inc.,
833 F.2d 117 (8th Cir. 1987) 28, 29

Lieb v. Topstone Indus., Inc.,
788 F.2d 151 (3d Cir. 1986) 33

Marx v. Gen. Revenue Corp.,
568 U.S. ----, 133 S. Ct. 1166 (2013) 29

Nightingale Home Healthcare v. Anodyne Therapy,
626 F.3d 958 (7th Cir. 2010) 21, 22, 28, 29

Safir v. U.S. Lines, Inc.,
792 F.2d 19 (2d Cir. 1986) 27

Administrative Decisions

In re Certain Devices for Mobile Data Commc'n,
337-TA-809, Order No. 60
(I.T.C. Oct. 12, 2012) 25

Statutes and Rules

15 U.S.C. § 1117(a) 21, 22

17 U.S.C. § 505 21

35 U.S.C. § 285 ..... *passim*

Leahy-Smith America Invents Act,
Pub. L. No. 112-29, § 34, 125 Stat. 284 (2011) ... 14

Legislative History

S. Rep. No. 79-1503 (1946) 24

Litigation Materials

Nintendo's Motion for Attorneys' Fees, *Guardian Media Techs., Ltd. v. Coby Elecs. Corp.*,
No. 08-cv-8439 (C.D. Cal. June 29, 2009),
ECF No. 218 12

Apple's Redacted Mot. to Dismiss,
Lodsys, LLC v. Combay, Inc.,
No. 11-cv-90 (E.D. Tex. Sep. 18, 2013),
ECF No. 995 27

Brief of *Amici Curiae* Applications Developers Alliance, et al., *Lodsys, LLC v. Combay, Inc.*, No. 11-cv-90 (E.D. Tex. Sep. 19, 2013), ECF No. 999 26

Lodsys, LLC v. Combay, Inc., No. 11-cv-90, 2013 WL 5353004 (E.D. Tex. Sep. 24, 2013) 27

Compl., *Monec Holding AG v. Apple Inc.*, 09-CV-312 (E.D. Va. Mar. 23, 2009), ECF No. 1 31

Def.'s Mot. for Fees, *Monec Holding AG v. Apple Inc.*, (E.D. Va. Aug. 3, 2009), ECF No. 57 31

Hr'g Tr., *Monec Holding AG v. Apple Inc.*, (E.D. Va. Aug. 3, 2009), ECF No. 57-3 31

First Amended Compl., *Openwave Sys. Inc. v. Apple Inc.*, 11-cv-765 (D. Del. Jan. 2, 2013), ECF No. 11 25

Second Amended Compl., *Openwave Sys. Inc. v. Apple Inc.*, 11-cv-765 (D. Del. June 28, 2013), ECF No. 32 .. 25

Potter Voice Techs. v. Apple, Inc., 13-cv-1710 (N.D. Cal. Mar. 29, 2013), ECF No. 319 33

Other Authorities

Acacia Research Historical Market Cap Data, YCharts, http://ycharts.com/companies/ACTG/market_cap (last visited Dec. 9, 2013) 11

American Intellectual Property Law Association, Report of the Economic Survey, 2013 (2013) 13

James Bessen & Michael J. Meurer, *The Direct Costs from NPE Disputes*, 99 Cornell L. Rev. (forthcoming 2014), *available at* http://papers.ssrn.com/sol3/papers.cfm?abstract_id=2091210 ..... *passim*

Emily H. Chen, *Making Abusers Pay: Deterring Patent Litigation by Shifting Attorneys' Fees*, 28 Berkeley Tech. L. J. 351 (2013) 23, 24

Colleen V. Chien, *Of Trolls, Davids, Goliaths, and Kings: Narratives and Evidence in the Litigation of High Tech Patents*, 87 N.C. L. Rev. 1571 (2009) 13, 16, 18

Colleen V. Chien, *Reforming Software Patents*, 50 Hou. L. Rev. 323 (2012) 28

Federal Trade Commission, The Evolving IP Marketplace (2011) 10

P.J. Federico, *Commentary on the New Patent Act*, 75 J. Pat. & Trademark Off. Soc'y 161 (1993) (reprinted from 35 U.S.C.A. §§ 1, *et seq.*, Commentary (West 1954)) 22

Robin C. Feldman, *Intellectual Property Wrongs*, 18 Stan. J.L. Bus. & Fin. 250 (2013) 15

Robin C. Feldman, Rethinking Patent Law (2012) . 17

Chris Foresman, *Every Touch-Based Apple Product Targeted by Apparent Patent Troll*, Ars Technica (Apr. 23, 2012), http://arstechnica.com/apple/2012/04/every-touch-based-apple-product-targeted-by-apparent-patent-troll/ 32, 33

Stefania Fusco, *Markets and Patents Enforcement: A Comparative Investigation of Non-Practicing Entities in the US and Europe*, 19 Michigan Telecomm. & Tech. L. Rev. (forthcoming 2013) 19

Christian Helmers and Luke McDonagh, *Trolls at the High Court?* (London School of Econ., Working Paper 13, 2012), *available at* http://ssrn.com/abstract=2154958 ..... 19, 20

Sara Jeruss, Robin Feldman & Joshua Walker, *The America Invents Act 500: Effects of Patent Monetization Entities on U.S. Litigation*, 11 Duke L. & Tech. Rev. 357 (2012) 11, 13, 19

Mark A. Lemley, *Are Universities Patent Trolls?*, 18(3) Fordham Intell. Prop. Media & Ent. L.J. 611 (2008) 16

Mark A. Lemley, *Ten Things to Do About Patent Holdup of Standards*, 48 B.C. L. Rev. 149 (2007) 18

Jane P. Mallor, *Punitive Attorneys' Fees for Abuses of the Judicial System*, 61 N.C. L. Rev. 613 (1983) 23

Anna Mayergoyz, *Lessons from Europe on How to Tame U.S. Patent Trolls*, 42 Cornell Int'l L.J. 241 (2009) 20

Robert P. Merges, *The Trouble with Trolls: Innovation, Rent-Seeking, and Patent Law Reform*, 24 Berkeley Tech. L.J. 1583 (2009) ... 10, 15, 16, 18

Joe Mullin, *Patent Troll Backs Down, Agrees to Stop Suing Public Transit Agencies*, Ars Technica (Aug. 21, 2013), http://arstechnica.com/tech-policy/2013/08/patent-troll-backs-down-agrees-to-stop-suing-public-transit-agencies 12

PatentFreedom, *Most Pursued Companies*, http://www.patentfreedom.com/about-npes/pursued (last visited Dec. 9, 2013) 18, 19

President's Council of Econ. Advisors, Nat'l Econ. Council, Office of Sci. & Tech. Policy, Patent Assertion and U.S. Innovation (2013), *available at* http://www.whitehouse.gov/sites/default/files/docs/patent_report.pdf 13, 14

PricewaterhouseCoopers, *2012 Patent Litigation Study*, http://www.pwc.com/en_US/us/forensic services/publications/assets/2012-patent-litigation-study.pdf 13

Thomas D. Rowe, Jr., *Predicting the Effects of Attorney Fee Shifting*, 47 Law & Contemp. Probs. 139 (1984) 24

Kenneth W. Starr, *The Shifting Panorama of Attorneys' Fees Awards: The Expansion of Fee Recoveries in Federal Court*, 28 S. Tex. L. Rev. 189 (1986) 23

U.S. Gov't Accountability Office, GAO-13-465, Intellectual Property: Assessing Factors That Affect Patent Infringement Litigation Could Help Improve Patent Quality (2013) 14, 18

INTEREST OF THE *AMICUS CURIAE*[1]

Amicus curiae Apple Inc. ("Apple") is widely considered to be the country's leading innovator in its field. Since 1976, Apple has made its name by designing, developing, and selling cutting-edge consumer electronics, including mobile communication devices, media players, personal computers, and related software and services. Apple products such as the iPhone and the iPad have, in recent years, revolutionized the portable consumer electronics industry. Of course, developing and designing these products has required substantial research, time, and energy. Apple has protected that work with thousands of U.S. patents.

Apple's success sometimes leads it to the courtroom to litigate patent disputes. Apple has seen these disputes from both sides—one day taking on a copycat and the next defending itself against a patent holder alleging infringement. Apple therefore ha a strong interest in the U.S. patent system and the balance that it strives to strike between promoting innovation and fostering competition.

Recent phenomena, most importantly the meteoric rise of the patent assertion entity ("PAE"), have disrupted that balance. PAEs do not invent, manufacture, or sell any product. Many of them do noth-

---

[1] The parties have consented to the filing of this brief. No counsel for a party authored this brief in whole or in part, and no such counsel or a party made a monetary contribution intended to fund the preparation or submission of this brief. No person other than *amicus curiae*, its members, or its counsel made a monetary contribution to its preparation or submission.

ing more than acquire vague patents, and then use litigation or the threat of litigation to negotiate royalties that are far larger than what the patents warrant. The patent assertion industry has exploded over the past decade.

Apple is the firm most targeted by PAEs. Over the last three years alone, Apple has faced a PAE's allegations of patent infringement in 92 separate matters. 57 of these cases have been resolved. Apple has rarely lost on the merits. But victory figures as small consolation, because in every one of these cases, Apple has been forced to bear its legal fees. This reality is the lifeblood of the patent assertion industry, because the threat of fees often forces an undeserved settlement. Indeed, the opening line of many negotiations is some form of, "What we're asking for is less than it will cost you to litigate this case to judgment." It should come as no surprise, then, that despite its success in litigating the merits, for business purposes Apple has agreed to a settlement in 51 of the 57 closed cases. The remaining 6 cases are either outright victories or instances in which the plaintiff voluntarily walked away from its suit before judgment.[2] Each of these cases involved a significant investment of fees and effort by Apple.

---

[2] Except where otherwise noted, the Apple-specific statistics contained in this brief are drawn from internal Apple records, and have been verified against data provided by PatentFreedom, a third-party consultancy that focuses on non-practicing entities. *See* PatentFreedom, http://www.patentfreedom.com/about (last visited Dec. 9, 2013). Apple also commissioned PatentFreedom to produce a statistical report on certain global PAE statistics for purposes of this brief. That report is cited herein as *PatentFreedom PAE Study*.

And the litigation statistics are just the tip of the iceberg. For every case that gets to court, Apple receives dozens of royalty demand letters.

These two cases present the Court with an opportunity to help address the growing PAE problem. By statute, district courts may award fees in "exceptional" cases. 35 U.S.C. § 285. But under the current Federal Circuit framework, courts may award fees to a prevailing patent defendant only if "there has been some material inappropriate conduct related to the matter in litigation" or, alternatively, "if both (1) the litigation is brought in subjective bad faith, and (2) the litigation is objectively baseless." *Brooks Furniture Mfg., Inc. v. Dutailier Int'l, Inc.*, 393 F.3d 1378, 1381 (Fed. Cir. 2005). Experience has shown that few district courts award fees under this demanding rubric.

This Court should make clear that district courts have the authority in exceptional cases to award attorney's fees to the defendant. A real threat of fee shifting would take away PAEs' biggest bargaining chip. It would encourage more thorough preassertion investigations and discourage weak claims. It would embolden operating companies to challenge frivolous claims in court instead of capitulating *in terrorem*. And it would keep those PAEs that contribute nothing to the patent market from taxing the returns of innovators.

BACKGROUND

Section 285 of the Patent Act provides that "[t]he court in exceptional cases may award reasonable at-

torney fees to the prevailing party." 35 U.S.C. § 285. Both *Highmark Inc. v. Allcare Health Management, Inc.* and *Octane Fitness, LLC v. ICON Health & Fitness, Inc.* present important questions as to how this provision should be applied. But they are creatures of very different contexts, and these contextual distinctions highlight an important new reality in patent litigation.

Highmark is representative of a troubling trend. Allcare Health Management, Inc. ("Allcare") is a so-called "patent assertion entity," or "PAE." Allcare did not invent the "health management system" software disclosed in the vague patent at issue here. It is not interested in making anything with the technology either. It seeks only to use the patent, acquired from the inventor for $75,000, to extract exorbitant royalties. And like most PAEs, Allcare has one move: It threatens litigation.

In April 2002, Allcare wrote Highmark Inc. ("Highmark"), a health services provider, claiming that Highmark was infringing its patent. *Highmark*, Pet. App. 45a. This and subsequent dispatches urged Highmark to purchase a license, and raised the potential for litigation. *Id.* One such letter, in December 2002, not only proclaimed Allcare's intention to seek "substantial damages," but also noted that another entity had already racked up $2 million in legal fees defending itself against Allcare's claims of infringement. *Id.* at 46a.

Allcare made good on its threats, and then some. The parties litigated for five years, and Highmark spent over $4.5 million in legal fees before finally

winning summary judgment. All this even though the suit never should have happened—Allcare's allegations of infringement were meritless from the start. The district court found as much in its memorandum and order granting Highmark's motion for attorney's fees under § 285. "Allcare had not done its homework when it began trolling for dollars and threatening litigation," *id.* at 69a; it had "persisted in its infringement allegations" even after they "were shown to be without support by its own expert report and deposition testimony," *id.* at 78a; and it had engaged in "frivolous and vexatious tactics," *id.* at 82a, "needlessly prolonging th[e] litigation and increasing its costs," *id.* at 90a.

Cases like this—baseless suits initiated and dragged out by PAEs—have become commonplace. As long as those targeted by unscrupulous PAEs have little hope of recovering their legal fees once litigation has ended, PAEs get their way win or lose. It is extortion: This is what it cost the last firm that was too proud to pay up.

Octane, on the other hand, arises from a more traditional context. Both ICON Health & Fitness, Inc. ("ICON") and Octane Fitness, LLC ("Octane") are "operating companies"—they make things and sell them. ICON and Octane are competitors in the market for exercise equipment. ICON is a market leader in this arena, and it owns a portfolio of related patents. It brought suit against Octane to enforce two such patents, alleging that Octane's elliptical machines infringed. *Octane* is not about claiming an undeserved share of another firm's profits; it is about protecting a competitive advantage.

ICON's conduct was different, too, especially when understood in the context of litigation between competitors. There is no indication that ICON, itself an inventor, failed to conduct a proper pre-suit examination, like Allcare failed to do in *Highmark*. And although ICON was not practicing the particular patents at issue in the suit, no judge ever found that it took positions that lacked objective support, let alone clung to them after it became clear that it could not prevail. In both *Highmark* and *Octane*, patent-owners litigated and lost. But the similarities between ICON and Allcare, from motivations to conduct, soup to nuts, may well end there.

In *Highmark* and *Octane*, the Federal Circuit concluded that the case was not "exceptional" within the meaning of § 285, leaving the alleged infringers to bear their own fees. Apple takes no position as to the correctness of these conclusions. But the standard the Federal Circuit applied to reach these determinations is insensitive to an important new reality in patent litigation. "An industry has developed in which firms use patents not as a basis for producing and selling goods but, instead, primarily for obtaining licensing fees." *eBay Inc. v. MercExchange, L.L.C.*, 547 U.S. 388, 396 (2006) (Kennedy, J., concurring). It is, in large part, an industry that subsists on demands *in terrorem*, not technological innovation. These cases present an ideal opportunity to acknowledge this reality and to announce a test that is sensitive to its implications.

SUMMARY OF ARGUMENT

Section 285 of the Patent Act grants federal district courts the discretion to award attorney's fees to the prevailing party in "exceptional" cases. 35 U.S.C. § 285. Much like the fee-shifting provisions applicable to Copyright and Trademark cases, § 285 was meant in part to discourage weak cases and to act as a bulwark against extortionate filings. Never before has this protection been so urgently needed, as the patent world has struggled to cope with the rise of a legion of patent assertion entities that thrives on strike suits, nuisance suits, and *in terrorem* demands. But the Federal Circuit's exceptional case standard has proved nearly impossible to satisfy, squandering § 285's potential benefits. This Court should replace the Federal Circuit's current standard with one that takes account of the business models and motivations of the parties, the merits of the suit, and the parties' conduct during litigation.

I. The growth of the patent assertion industry over the past decade has been startling. Most patent litigation is now initiated by PAEs. And for every suit that is actually filed, PAEs make many more demands. Operating companies spend vast sums investigating PAEs' allegations of infringement, negotiating settlements, and litigating claims. PAEs do not invent, develop, or make anything, but their impact on the tech industry is profound.

On the whole, the PAE story has not been a happy episode for patent law. This is not to say that all PAEs are bad. Some PAEs may help spur innovation by identifying and buying underutilized inven-

tions, and licensing their use to those who can best maximize their value. Others might hold highly valuable patents licensed to major operating companies, and protect those companies' competitive advantage by enforcing the patents against infringers. But most PAEs instead practice the dark arts of *in terrorem* profiteering, threatening nuisance suits or strike suits to obtain royalties. These PAEs use the expense of patent litigation as a bargaining chip to obtain royalties that are grossly disproportionate to the actual value of the rights they transfer.

This behavior is harming innovation. Needless to say, money spent on undeserved royalties or unnecessary litigation would be far better spent on innovation. By and large, PAEs are simply skimming the profits of innovative companies without themselves contributing anything to technological innovation.

II. This Court should adopt an exceptional case standard that focuses on the nature and motivations of the parties to the litigation, the merits of the parties' positions, and the parties' conduct during litigation.

The traditional rule in American litigation is that each party bears its own litigation costs. But Congress has altered this rule in several contexts in order to serve substantive goals or eliminate perverse incentives. Section 285 is a child of this tradition. Congress recognized that the immense cost of patent litigation could be used as a bargaining chip to extract exorbitant and unjustified settlements. It enacted § 285 in part as a corrective to this potential

concern. Section 285 must be understood in light of these goals: discouraging weak claims and ensuring that the expense of patent litigation is not used as a bargaining chip to extort settlements.

To this end, § 285 should account for a host of factors relevant to a particular litigation. These include the nature of the parties, the motivations underlying the parties' positions, the objective merit of both the parties' claims and the particular arguments advanced in court, and the parties' conduct. Such a test will discourage nuisance suits and strike suits. It will prevent patent-holders from using the cost of patent litigation as a bargaining chip to obtain more than their fair share. And it will ensure that patent litigation is used to further the patent law's goal of encouraging progress in the useful arts.

ARGUMENT

I. PATENT ASSERTION ENTITIES ARE THRIVING AT THE EXPENSE OF INNOVATORS

The patent assertion industry is booming. Patent assertion is not necessarily a bad thing, at least not in the abstract. Entities that specialize in identifying valuable inventions, and licensing or protecting patents in them, can in theory be a boon to innovation. But the reality of the boom is not so rosy. The risk and expense of patent litigation creates opportunities for extortionate behavior, and many PAEs have leapt at the chance to take more than their fair share. Worse still, the targets of these *in terrorem* tactics are often the most successful innovators in

American industry. PAEs have become a drag on technological innovation, inflicting billions of dollars in deadweight losses every year.

A. Patent Assertion Entities Are Thriving

PAEs are a type of "non-practicing entity," or "NPE." There are now more than 250 PAEs like Allcare actively acquiring patents, penning demand letters, and filing lawsuits in federal court. *PatentFreedom PAE Study*. What separates PAEs from other types of NPEs—like research and development shops, individual inventors, or universities—is that PAEs generally assert only patents acquired from others, not patents that were originally assigned to them. *See* Federal Trade Commission, The Evolving IP Marketplace, at 8 & n.5 (2011). In other words, they neither invent nor produce. They exist only to generate royalties.

Entities that acquire patent rights for the sole purpose of obtaining royalties are nothing new. *See* Robert P. Merges, *The Trouble with Trolls: Innovation, Rent-Seeking, and Patent Law Reform*, 24 Berkeley Tech. L.J. 1583, 1592-96 (2009). But over the past decade, the patent assertion business has exploded. *See* James Bessen & Michael J. Meurer, *The Direct Costs from NPE Disputes*, 99 Cornell L. Rev. (forthcoming 2014) (manuscript at 5, 29), *available at* http://papers.ssrn.com/sol3/papers.cfm?abstract_id=2091210.

So far in 2013, PAEs alleged patent infringement against a staggering 2,873 defendants. *PatentFreedom PAE Study*. If the filings keep apace,

the industry will break 2011's record mark of 3,103. *Id.* PAE litigation is also rapidly becoming the dominant feature of the patent landscape. In 2008, 17 percent of all defendants accused of patent infringement were accused by PAEs. *Id.* By 2010, the number was 33 percent, and it grew to 37 percent in 2012. *Id.* It is up once again this year: 43 percent of all defendants face PAEs. *Id.* To be sure, we are in the midst of a well-documented boom in patent litigation. But the above statistics suggest that the explosion of PAE suits is not merely a function of the boom. PAEs *are* the boom.

Little wonder, then, that the biggest players in the PAE game are now the most prolific filers in all of patent litigation. In a study of 500 patent suits filed between 2007 and 2011, four of the five most frequent filers were PAEs. (The exception is a pharmaceutical company.) Sara Jeruss, Robin Feldman & Joshua Walker, *The America Invents Act 500: Effects of Patent Monetization Entities on U.S. Litigation*, 11 Duke L. & Tech. Rev. 357, 382 (2012). Some of the big names:

- Acacia Research Corporation, a publicly-traded company that asserts its hundreds of patent portfolios through an army of subsidiaries. Acacia's market capitalization grew from just $62 million in November 2008 to **$2.12 billion** in March of 2012, but it is prone to the sorts of wild fluctuations one would expect of a firm whose fortunes turn exclusively on threats and strike litigation. Acacia Research Historical Market Cap Data, YCharts,

http://ycharts.com/companies/ACTG/market_cap (last visited Dec. 9, 2013).

- ArrivalStar S.A., a Luxembourg-based PAE that regularly alleges infringement of its vehicle tracking patents, but devoutly avoids litigating the merits. Joe Mullin, *Patent Troll Backs Down, Agrees to Stop Suing Public Transit Agencies*, Ars Technica (Aug. 21, 2013), http://arstechnica.com/tech-policy/2013/08/patent-troll-backs-down-agrees-to-stop-suing-public-transit-agencies. ArrivalStar made news this year by targeting municipal public transportation agencies, ultimately relenting when the American Public Transit Association sued to invalidate ArrivalStar's patents. *Id.*

- Guardian Media Technologies, Ltd., a PAE founded by a former patent lawyer. Nintendo's Motion for Attorneys' Fees, at 1-2, *Guardian Media Techs., Ltd. v. Coby Elecs. Corp.*, No. 08-cv-8439 (C.D. Cal. June 29, 2009), ECF No. 218. Guardian is fond of asserting its two parental control patents against dozens of defendants at a time, but it too has become expert at avoiding the merits. *Id.*

These three alone have sued hundreds of defendants over the last decade.

In point of fact, the run of PAE litigation is two things: short on merit and expensive to defend against. In cases resolved on the merits in the last decade, PAEs obtained favorable results in just one out of every five. *PatentFreedom PAE Study*; *see al-*

so PricewaterhouseCoopers, *2012 Patent Litigation Study*, at 12, http://www.pwc.com/en_US/us/forensic-services/publications/assets/2012-patent-litigation-study.pdf (finding that NPEs obtained favorable results in 24% of cases between 2006-2011, a success rate 13% lower than that of operating companies during the same period). But the cases' relative lack of merit hardly makes them less costly to litigate. "Mean legal costs per defense range from $420,000 for small/medium companies to $1.52 million for large companies." Bessen & Meurer, *supra*, at 14. And the more that is at stake, the higher the costs. Major innovators like Apple often face suits in which more than $10 million is at risk—legal bills for these sorts of suits routinely run $3 to $4 million or more. *See* American Intellectual Property Law Association, Report of the Economic Survey, 2013, at 35 (2013).

As startling as the above data are, just tallying up the litigation stats understates PAEs' impact. Litigation is usually a last resort. The leading edge of a patent assertion is most often a simple demand letter. *See id.*; Jeruss, Feldman & Walker, *supra*, at 374-75. "For every defendant that is actually sued, many more demands are made." Colleen V. Chien, *Of Trolls, Davids, Goliaths, and Kings: Narratives and Evidence in the Litigation of High Tech Patents*, 87 N.C. L. Rev. 1571, 1579 (2009) [hereinafter Chien, *Litigation of High Tech Patents*]. "Conservative estimates place the number of threats in the last year alone at a minimum of 60,000 and more likely at over 100,000." President's Council of Econ. Advisors, Nat'l Econ. Council, Office of Sci. & Tech. Policy, Patent Assertion and U.S. Innovation 6 (2013), *available at* http://www.whitehouse.gov/sites/default/

files/docs/patent_report.pdf [hereinafter Patent Assertion and U.S. Innovation]. Simply reviewing and responding to these demands can be a costly ledger item, even if a suit is never filed.

Both Congress and the President have taken note of this new reality. *See* Leahy-Smith America Invents Act, Pub. L. No. 112-29, § 34, 125 Stat. 284, 340 (2011) (directing U.S. Government Accountability Office to "conduct a study of the consequences of litigation by non-practicing entities, or by patent assertion entities"); U.S. Gov't Accountability Office, GAO-13-465, Intellectual Property: Assessing Factors That Affect Patent Infringement Litigation Could Help Improve Patent Quality (2013) [hereinafter GAO Report]; Patent Assertion and U.S. Innovation, *supra*. The phenomenon has received heavy scholarly attention as well. Something huge is happening. The rise of the PAE presents new and fundamental challenges for the patent world.

B. Most Patent Assertion Entities Are Profiteers That File Strike Suits and Nuisance Suits to Obtain Undeserved Royalties From Innovators

Because PAEs do not use their patents to make and sell things, the only way they can profit is by turning them into streams of income. Judging by their astounding growth over the past decade, they are succeeding. But profits do not necessarily mean social value. And the evidence suggests that PAEs are growing for all the wrong reasons.

Patent law seeks to maximize the social good by incentivizing technological innovation. *Atl. Works v. Brady*, 107 U.S. 192, 200 (1883) ("The design of the patent laws is to reward those who make some substantial discovery or invention, which adds to our knowledge and makes a step in advance in the useful arts."). There is nothing inherent in the concept of a PAE that undermines this goal. Indeed, some PAEs help. Some PAEs engage in a "form of arbitrage," working to identify or develop valuable patents, purchasing them from inventors without the resources or expertise to deploy them, and licensing them at a fair price to firms that can bring them to market. Merges, *supra*, at 1588. Other PAEs hold valuable patents licensed to major operating companies, asserting those patents against infringers in order to protect licensees' investment. These PAEs facilitate competition in bringing innovative technology to market. No problem as far as the goals of patent law are concerned.

But most PAEs hoe a different row. Certain aspects of the patent system create opportunities for patent-holders "to bargain for compensation far beyond the value of the right." Robin C. Feldman, *Intellectual Property Wrongs*, 18 Stan. J.L. Bus. & Fin. 250, 253 (2013). No bargaining chip is more valuable than the "lack of a quick and reasonably priced method for resolving disputes regarding the boundaries of the rights," *id.* at 258—in other words, the enormous cost of patent litigation. And altogether too many PAEs are in the business of leveraging this feature of patent litigation "to capture not just the value of what they contributed to an invention, but also a disproportionate share of somebody else's

product." Mark A. Lemley, *Are Universities Patent Trolls?*, 18(3) Fordham Intell. Prop. Media & Ent. L.J. 611, 613-14 (2008). Economists call this rent seeking. Securities lawyers call it strike litigation. The most appropriate label might be extortion.

Allcare illustrates how PAEs have reduced this profiteering to a science. To begin with, their very defining feature—that they do not practice their patents—is an adaptation meant to tilt the bargaining table. For operating companies, the risk of a countersuit factors heavily into the decision whether to file suit against a competitor. But an entity that never makes anything can never be counter-sued. Bessen & Meurer, *supra*, at 29. This means PAEs have less at stake during litigation than the operating companies they target, and far lower discovery costs. *Id.* Their greater tolerance for drawn-out litigation makes PAEs' *in terrorem* demands all the more credible.

PAEs then amplify this advantage through two primary strategies. Some are volume scorers. These PAEs live in the "gap between what is truly innovative and what is permissibly patented and asserted." Merges, *supra*, at 1589. They buy up weak or vague patents and assert them against dozens of operating companies. *See* Bessen & Meurer, *supra*, at 8, 20. Because the patents are of low quality, the PAEs are often "willing to settle for small payments, often no more than the amount a defendant would spend on legal fees to defend the case." *Id.* But "[i]f a fraction of these attempts succeed, a revenue stream can be developed without resort to litigation." Chien, *Litigation of High Tech Patents*, *supra*, at 1580.

And avoid litigation they do, assiduously. Often they perform what one scholar has dubbed "The Dance of the Sugar Plum Letter," a method of "enter[ing] license negotiations without putting the patent at risk." Robin Feldman, Rethinking Patent Law 56-57 (2012). The idea is to craft a demand letter just gentle enough to avoid giving rise to a litigable controversy and hence a declaratory judgment suit in a potentially unfriendly forum. *Id.* As long as the PAE can avoid litigating the patent, it can assert it over and over again for the cost of a demand letter's postage stamp. Or perhaps the next filing fee—some PAEs, as Apple can attest, have been known to voluntarily dismiss suits after adverse rulings, only to pursue identical claims in another forum.

Indeed, Apple deals with these sorts of entities constantly. At present, 228 patent assertions against Apple remain unresolved. Some of the demand letters Apple receives specify the allegedly infringed patent, and some do not. Some of them articulate a claim construction under which an Apple product might infringe, but most do not. All of them, no matter how vague or fanciful they are otherwise, invoke loud and clear the patent owner's right to exclude others from use of the technology disclosed in the patent. And none ever fails to invite Apple to purchase a license. Two attorneys at Apple spend all of their time researching these letters' claims and drafting responses. Some inevitably result in licensing agreements, even though the technology in many of the patents may be of no real use to Apple.

The other model popular among PAEs is to stalk "big game." Bessen & Meurer, *supra*, at 20. PAEs "have a reputation for surprising their targets, typically mature companies that have already developed and sold allegedly infringing products." Chien, *Litigation of High Tech Patents*, *supra*, at 1579. The idea is to ambush the company after it has sunk costs into a technology. *See* Merges, *supra*, at 1590-91. "Even if [the company] could quite easily have avoided infringing the patent if [it] had been aware of it before making the decision to choose this technology," its sunk costs "drive the licensing settlement value to a percentage that is much greater than it would be in a system in which we calculated the value that the inventor had actually contributed to the product." Mark A. Lemley, *Ten Things to Do About Patent Holdup of Standards*, 48 B.C. L. Rev. 149, 154 (2007).

The big-game PAE's favorite target has two things in common: innovative, high-tech products and large profits. "[A] typical smartphone," say, "uses from 50,000 to 250,000 patented technologies." GAO Report, *supra*, at 31. This makes searching for potentially relevant patents before development extremely difficult, and it makes the threat of litigation even more daunting because just a handful of assertions can imperil the entire product. Put simply, the most successful firms have the most to give and the most to lose, so a PAE's bargaining power is at its apex. The list of non-practicing entities' most popular targets reads like a who's-who of the giants of the tech industry. PatentFreedom, *Most Pursued Companies*, http://www.patentfreedom.com/about-

npes/pursued (last visited Dec. 9, 2013). And again, Apple is at the top of the hit list. *Id.*

Whatever the model or the size of the target, though, the ultimatum is the same: pay royalties or pay legal fees. "Given the costs of litigating infringement suits, the uncertainty of the outcome, and the potential for outsized judgment awards, companies frequently capitulate to a [PAE]'s demands, rather than face the ordeal of trial." Jeruss, Feldman & Walker, *supra*, at 375. When PAEs are forced to litigate, they tend to lose, but not before imposing a price tag for legal fees that will play perfectly in the next demand letter, or gaining enough information during discovery to form the basis for the next extortionate suit. This heads-I-win-tails-you-lose scenario is why PAEs have been so successful.

This is hardly idle speculation—the relative modesty of PAE activity internationally bears it out. Apple has considerable experience litigating in European countries, for example, but it faces almost no PAE litigation outside of the United States. Recent empirical research has confirmed that PAEs are a comparatively insignificant feature of the patent landscape in the United Kingdom, Germany, and Italy. *See* Christian Helmers and Luke McDonagh, *Trolls at the High Court?* (London School of Econ., Working Paper 13, 2012), *available at* http://ssrn.com/abstract=2154958; Stefania Fusco, *Markets and Patents Enforcement: A Comparative Investigation of Non-Practicing Entities in the US and Europe*, 19 Michigan Telecomm. & Tech. L. Rev. (forthcoming 2013). What do all these European

countries have in common? They each follow the "loser pays" rule—sometimes called the "British rule"—for attorney's fees. Anna Mayergoyz, *Lessons from Europe on How to Tame U.S. Patent Trolls*, 42 Cornell Int'l L.J. 241, 265-67 (2009). As many have recognized, it is not a coincidence that a system in which a PAE cannot make a credible threat of huge litigation costs is a system in which a PAE cannot succeed. *See id.*; Helmers & McDonagh, *supra*, at 19.

But back here in the United States, Apple and other innovative companies are incurring enormous costs defending against baseless claims brought by entities that exist to use litigation as a bargaining chip. *See* Bessen & Meurer, *supra*, at 3 (estimating that non-practicing entities imposed costs of $29 billion in 2011). Apple has no choice but to pay its bill if it wants to continue to innovate. As Apple's CEO put it, "It's overhead." Apple can no easier avoid the costs of PAE litigation than it can avoid the costs of keeping the lights on in its Cupertino, California headquarters.

The bottom line is that while *some* PAEs might serve useful functions in the patent market, most plainly do not. Most are interested only in abusing the patent system to collect more than their share. And litigation fees are the linchpin. PAEs have proliferated over the past decade because they have succeeded time and time again in imposing massive litigation fees on their targets, boosting each time the credibility of their threats. The federal courts' demonstrated reluctance to shift these fees onto PAEs has emboldened them to bring ever more liti-

gation. This dynamic is undermining the goals of patent law and inflicting serious harm on the economy.

II. COURTS SHOULD CONSIDER A BROAD ARRAY OF FACTORS WHEN EVALUATING MOTIONS FOR ATTORNEY'S FEES

In *Fogerty v. Fantasy, Inc.*, 510 U.S. 517 (1994), this Court considered the fee-shifting provision that applies in copyright cases, 17 U.S.C. § 505. Under § 505, "the court may ... award a reasonable attorney's fee to the prevailing party." When applying this provision, the Court explained, "[p]revailing plaintiffs and prevailing defendants are to be treated alike." *Fogerty*, 510 U.S. at 534. The Court then endorsed a set of factors for use by lower courts in evaluating whether attorney's fees should ultimately be awarded in a given case. Those factors include "frivolousness, motivation, objective unreasonableness (both in the factual and in the legal components of the case) and the need in particular circumstances to advance considerations of compensation and deterrence." *Id.* at 534 n.19.

In *Nightingale Home Healthcare v. Anodyne Therapy*, 626 F.3d 958 (7th Cir. 2010), Judge Richard Posner explored the Lanham Act's fee-shifting provision, 15 U.S.C. § 1117(a). Section 1117(a) provides that "the court in exceptional cases may award reasonable attorney fees to the prevailing party." Driving Judge Posner's analysis of this "exceptional case" standard was potential "use [of] the Lanham Act for strategic purposes"—in other words, to effectuate goals "independent of the outcome of the case

by piling litigation costs on a competitor." *Nightingale Home Healthcare*, 626 F.3d at 962. To meet this concern, he concluded, § 1117(a) mandates fee shifting where a prevailing party "can show that his opponent's claim or defense ... was extortionate in character." *Id.* at 965.

Section 285 is animated by many of the same principles recognized in *Fogerty* and *Nightingale*. As this Court explained in *Fogerty*, the fee shifting statutes in the patent, trademark, and copyright law are "closely related." *Id.* at 525 n.12. Indeed, the text of § 285 is virtually identical to that of its Lanham Act counterpart. And although its counterpart in the copyright context does not include the "exceptional case" language, § 285's drafting history indicates that § 285 was initially identical to the copyright provision, and the "exceptional case" language was adopted only "to express the intention of the old statute as shown by its legislative history and as interpreted by the courts." P.J. Federico, *Commentary on the New Patent Act*, 75 J. Pat. & Trademark Off. Soc'y 161, 216 (1993) (reprinted from 35 U.S.C.A. §§ 1, *et seq.*, Commentary (West 1954)). All three provisions serve the same objectives, and are meant to do so in the same manner.

Section 285 should, just like the *Fogerty* factors, account for the nature of the litigants in a particular case, their motivations, the merits of their positions, and their conduct during litigation. Courts should view these factors as interrelated, and apply them with an eye towards discouraging extortionate litigation. And the same inquiry should be applied to

plaintiffs and defendants alike. This test will best serve the goals of patent law.

A. The Test for Fee Shifting Should Take Into Account the Nature and Motivations of the Parties

Under the so-called "American rule," "the prevailing litigant is ordinarily not entitled to collect a reasonable attorneys' fee from the loser." *Alyeska Pipeline Serv. Co. v. Wilderness Soc'y*, 421 U.S. 240, 245-47 (1975). While this arrangement is the accepted norm in much of American litigation, Congress has enacted hundreds of statutes that create fee shifting regimes that deviate from the rule. Kenneth W. Starr, *The Shifting Panorama of Attorneys' Fees Awards: The Expansion of Fee Recoveries in Federal Court*, 28 S. Tex. L. Rev. 189, 195 (1986).

Many of these statutory exceptions are designed to combat the possibility that a rule requiring each party to bear his, her, or its fees "may function as a 'legalized form of blackmail' that encourages frivolous claims and adds to the congestion of courts." Jane P. Mallor, *Punitive Attorneys' Fees for Abuses of the Judicial System*, 61 N.C. L. Rev. 613, 617 (1983). The worry is that the American rule could create a dynamic where "a defendant might choose not to challenge a disputed claim, or even a groundless claim, if the costs of defending the claim would exceed the plaintiff's demands." *Id.* Under these conditions, "even if a plaintiff is unwilling to go to trial, it is still profitable for the plaintiff to file a pure nuisance claim whenever the plaintiff's cost of filing is less than the defendant's cost of defense." Emily H.

Chen, *Making Abusers Pay: Deterring Patent Litigation by Shifting Attorneys' Fees*, 28 Berkeley Tech. L. J. 351, 359 (2013). If this sounds familiar, it is probably because this is very calculus that motivates many PAEs, described earlier.

Of course, it follows from the above that the effect of a fee system that includes a "substantial likelihood of fee shifting against losing plaintiffs ... should be to discourage pursuit of weak claims" brought for improper purposes. Thomas D. Rowe, Jr., *Predicting the Effects of Attorney Fee Shifting*, 47 Law & Contemp. Probs. 139, 152 (1984). This is one of the things § 285 was enacted to do. *See* S. Rep. No. 79-1503, at 2 (1946) (explaining that § 285 "enable[s] the court to prevent a gross injustice to the infringer"). It must take account of motivations like those driving PAEs in order to have its intended effect.

A party's motivations in litigation may not be readily apparent in every case, but in some it is all too obvious. In *Highmark*, for instance, Allcare used the explicit threat of exorbitant litigation costs from the get-go to gain the upper hand. It had conducted no pre-suit investigation, so its litigation cannot possibly have been motivated by the bona fide desire to protect its patent rights. And even after its position was exposed as wholly untenable, Allcare persisted, a decision that can be explained only as an attempt to run up its opponent's costs. *Highmark* has all the markings of a case in which one party litigated purely for what Judge Posner called "strategic purposes."

Another prime example is Apple's litigation against a PAE called Openwave Systems Inc. In the fall of 2011, Openwave filed complaints against Apple and Research in Motion Corp. (maker of the Blackberry line of mobile devices) before both the United States International Trade Commission and a federal district court in the District of Delaware. *See In re Certain Devices for Mobile Data Commc'n*, 337-TA-809 (I.T.C.); *Openwave Sys. Inc. v. Apple Inc.*, 11-cv-765 (D. Del.). Both suits alleged infringement of the same five Openwave-owned patents. The district court action was stayed while the ITC action proceeded through discovery, a *Markman* hearing, and an Administrative Law Judge's claim construction. Claim construction did not go well for Openwave. With the writing on the wall, it withdrew its complaint and moved for termination of the ITC investigation in October 2012—just five days before trial—and the ITC granted the motion. *See In re Certain Devices for Mobile Data Commc'n*, 337-TA-809, Order No. 60 (I.T.C. Oct. 12, 2012).

But then Openwave (which by this time had changed its name to Unwired Planet) took a mulligan. It headed back to federal court in Delaware, filing an amended complaint that narrowed its focus to three of the initial five patents. First Amended Compl., *Openwave Sys. Inc. v. Apple Inc.*, 11-cv-765 (D. Del. Jan. 2, 2013), ECF No. 11. Apple moved to dismiss the complaint, but the district court permitted Unwired Planet to amend again, and the case barreled on. Second Amended Compl., *Openwave Sys. Inc. v. Apple Inc.*, 11-cv-765 (D. Del. June 28, 2013), ECF No. 32. Between the ITC and the district court, Apple has had to respond to *five* claim con-

struction briefs. A second *Markman* hearing was held on November 25, 2013. Exceptional indeed.

A party's business model, understood through its litigation history, can also offer clues as to the party's motivations. Consider, for example, PAEs like Guardian Media Technologies or ArrivalStar, discussed above. A search through a patent database will reveal quite an affinity for filing suit in federal court, but a mysterious timidity when it comes to litigating the merits. This is not a coincidence. It is the key tactic in a business model that uses the courts over and over again not to vindicate rights, but to extort undeserved settlements.

One would be hard pressed to imagine a more troubling instantiation of this model than the one practiced by Lodsys Group, LLC ("Lodsys"). As the market for mobile devices like the iPhone and iPad has matured, a community of millions of software developers has grown up along with it. Brief of *Amici Curiae* Applications Developers Alliance, et al. at 2, *Lodsys, LLC v. Combay, Inc.*, No. 11-cv-90 (E.D. Tex. Sep. 19, 103), ECF No. 999. This community designs and builds "apps"—short for applications—based in mobile operating systems like Apple's iOS. *Id.* Lodsys burst onto the patent assertion scene in 2011 by firing off a spate of demand letters to app developers, many of whom are individuals with extremely little revenue, alleging that they were using software related to "in-app purchasing" that was covered by a handful of Lodsys-owned patents. *Id.* at 2-3.

Lodsys did not send demands to Apple, and even acknowledged that Apple has a license to the patents. But Apple, interested for obvious reasons in the health of the app development community, stepped in anyway. Apple's Redacted Mot. to Dismiss at 3, *Lodsys, LLC v. Combay, Inc.*, No. 11-cv-90 (E.D. Tex. Sep. 18, 2013), ECF No. 995. First, it explained to Lodsys in plain terms the flaw in its demands: Apple had obtained a license from the prior owner to use each of Lodsys's patents, and that license covered app developers too. *Id.* Nevertheless, Lodsys brought suit against dozens of developers, many too small to have the resources to litigate. So Apple moved to intervene, seeking to place itself and its license between Lodsys and the developers. But again, Lodsys scuttled away, settling with each of the developers for a pittance, thereby mooting Apple's attempted intervention and avoiding a sure loss on the merits. *See id.* at 4; *Lodsys, LLC v. Combay, Inc.*, No. 11-cv-90, 2013 WL 5353004 (E.D. Tex. Sep. 24, 2013). Lodsys has no compunctions about this strategy. It will keep moving from developer to developer, leeching whatever royalties it can until a party with the resources to litigate scares it away.

If ever an entity with this sort of track record is forced into litigating the merits, a district court should take account of this in deciding whether to award fees. Considering this sort of background is hardly a novel idea. Courts routinely consider "the litigant's history of litigation and in particular whether it entailed vexatious, harassing or duplicative lawsuits" when evaluating whether a particular lawsuit should result in sanctions. *Safir v. U.S. Lines, Inc.*, 792 F.2d 19, 24 (2d Cir. 1986). This

simply reflects the reality that the nature of a party, as revealed through its litigation history and business model, can provide a window into that party's motivations in a particular suit. *Cf. Eon-Net LP v. Flagstar Bancorp*, 653 F.3d 1314, 1326 (Fed. Cir. 2011) (noting "indicia of extortion" and "history of filing nearly identical patent infringement complaints" in affirming exceptional case finding).

Although the nature and motivations of the parties to the litigation should be at the forefront of the analysis, "bad faith" should not be a requirement. The "bad faith" hurdle is perhaps the most formidable obstacle to fee recovery. *See* Colleen V. Chien, *Reforming Software Patents*, 50 Hou. L. Rev. 323, 378 (2012) ("[W]hen costs are imposed in only the case of bad faith, rather than automatically, courts [are] more loath to make the requisite finding and rarely order[] the payment of fees."). As Judge Posner explained in *Nightingale*:

> [A]n elaborate inquiry into the state of mind of the party from whom reimbursement of attorneys' fees is sought should be avoided. It should be enough to justify the award if the party seeking it can show that his opponent's claim or defense was objectively unreasonable—was a claim or defense that a rational litigant would pursue only because it would impose disproportionate costs on his opponent—in other words only because it was *extortionate in character if not necessarily in provable intention*. That should be enough to make a case "exceptional."

Nightingale Home Healthcare, 626 F.3d at 965 (emphasis added); *accord Hartman v. Hallmark Cards, Inc.*, 833 F.2d 117, 123 (8th Cir. 1987) ("[A]bsence of bad faith is not alone determinative on the Lanham Act fee issue."). Where it exists, evidence of subjective bad faith should of course not be excluded from the analysis—no need for a court to ignore plain evidence of misconduct—but the test for fees under this statutory regime should not hinge upon a prevailing party's ability to prove intent, particularly where federal courts are already vested with the authority to award fees in cases of bad faith. *Cf. Marx v. Gen. Revenue Corp.*, 568 U.S. ----, 133 S. Ct. 1166, 1175 (2013) ("[F]ederal courts have inherent power to award attorney's fees in a narrow set of circumstances, including when a party brings an action in bad faith.").

B. The Test for Fee Shifting Should Take Into Account the Merits of the Parties' Positions

The test for fee shifting under § 285 should also, of course, take into account the merits of the parties' positions and claims. Courts evaluating the merits in applying § 285 should consider the overall likelihood of success of the lawsuit, the objective basis underlying individual claims, and the reasonableness of the actual positions taken during litigation.

Again, *Highmark* is a case in point. One of Allcare's allegations of infringement concerned claim 102 of its health care management system patent. The preamble of claim 102 explained that the claim was directed to "[a] method of managing an integrat-

ed health care management system." *Highmark*, Pet. App. 14a. Elements of the claim then referred back to the "integrated health care management system" language. *Id.* Accordingly, as Allcare initially conceded, and as the Federal Circuit would ultimately find, the preamble language, under well-settled law, was itself a claim limitation. *See id.*

And under this limitation, any reasonable party would have known that Allcare's claim was dead on arrival. Allcare itself had proposed a construction of "integrated health care management system" that required the participation of not only health care providers and insurers, but also of patients and employers. *Id.* at 15a-16a. Highmark's allegedly infringing system obviously did not involve patient and employer interaction. So Highmark's system could not be infringing, plain as day. But Allcare nevertheless persisted in arguing against settled law that the preamble language did not limit claim 102, and against its own expert's conclusion that the preamble language required patient and employer interaction with the system. As both the district court and Federal Circuit found, Allcare's allegations with respect to claim 102 were utterly and objectively baseless.

Cases like this are hardly rare, as Apple can attest. Take *Monec Holding v. Apple Inc.* Monec is a Swiss holding company. It sued Apple in 2009 in the Eastern District of Virginia without even the courtesy of a demand letter. The complaint alleged that the Apple iPhone infringed a patent it owned related to e-book technology. Monec's counsel made clear

early on that it would like to resolve the suit quickly by selling its patent to Apple or licensing its use.

One of the allegations in Monec's complaint stated that "[t]he Apple iPhone display has dimensions such that one page of a book can be displayed at a normal size." Compl. ¶ 23, *Monec Holding AG v. Apple Inc.*, 09-CV-312 (E.D. Va. Mar. 23, 2009), ECF No. 1. Apple's counsel found this allegation puzzling in light of the complaint's concession that the iPhone's display in fact measures 3.5 inches diagonally. *Id.* ¶ 11. Counsel wrote to Monec, requesting an explanation. Monec's reply did nothing to clarify. It did not disclose the nature of any pre-suit investigation. Nor did it articulate a claim construction under which its position might be arguable. It simply reiterated its laughable contention that an iPhone can display one page of a book at normal size, and, of course, expressed Monec's willingness to enter a license agreement. Def.'s Mot. for Fees 2-3 & exh. H, *Monec Holding AG v. Apple Inc.* (E.D. Va. Aug. 3, 2009), ECF No. 57.

Apple's counsel moved for summary judgment, and the district court granted the motion. The district court remarked that "no person of ordinary understanding of the English language would ever say this would be normal size." Hr'g Tr. 7, *Monec Holding AG v. Apple Inc.* (E.D. Va. Aug. 3, 2009), ECF No. 57-3. Apple then moved for fees under § 285, contending that Monec had failed to conduct a pre-suit investigation, had taken an objectively baseless position, and had persisted in its claims after it became obvious that they lacked merit. The district court denied the motion from the bench.

All cases are not, of course, so painlessly dispatched. Consider *Guardian Media Technologies, Ltd. v. Coby Electronics Corp.* Guardian, as noted above, is one of the most prolific filers in patent litigation. It filed this suit against *thirty-six* defendants, including Apple, in December 2008. Guardian alleged that each infringed its patented parental video control technology. Most defendants, Apple included, settled out of court. Guardian had demonstrated its litigiousness over the years. As tough a pill as a settlement can be to swallow, it tends to be more palatable than years of litigation.

But one defendant, Nintendo of America, Inc. ("Nintendo"), decided to litigate. Nintendo explained to Guardian that the Wii video game console, the allegedly infringing product, did not even *play* video. How could it infringe a technology related to video playback? Guardian pressed ahead anyway, apparently on the strength of its contention that a video *game* is also a video program. It lost, of course. But not before Nintendo's counsel spent 622 hours defending against Guardian's baseless claims, running a bill of $309,442.50. The district denied Nintendo's motion for fees.

Monec and *Guardian* go down in the books as just a couple more PAE cases, meritless strike suits seeking undeserved royalties. There are plenty more just like it. A suit alleging that every single Apple touch-screen device infringes a patent on technology that has been used exactly twice in museum displays? That one, *Flatworld Interactives, LLC v. Apple Inc.*, 12-cv-1956 (N.D. Cal.), crawls through discovery. Chris Foresman, *Every Touch-Based Ap-*

ple Product Targeted by Apparent Patent Troll, Ars Technica (Apr. 23, 2012), http://arstechnica.com/apple/2012/04/every-touch-based-apple-product-targeted-by-apparent-patent-troll/. A single complaint against *fourteen* Smartphone makers, alleging that each infringes the same single voice-control software patent? Apple and other defendants managed to have their pieces of that one severed and transferred to more convenient forums, but each sliver continues on its own. *See* Order Granting Apple's Motion to Sever, *Potter Voice Techs. v. Apple, Inc.*, 13-cv-1710 (N.D. Cal. Mar. 29, 2013), ECF No. 319. And as long as the targets of all of these suits must bear their fees, the Monecs, Guardians, Flatworlds, and Potters of the world have every incentive to try again and again.

C. The Test for Fee Shifting Should Take Into Account Litigation Conduct

In addition to addressing these considerations, the test for identifying what is "exceptional" should take account of the entire array of relevant conduct including, where applicable, a patent holder's pre-litigation conduct. Section 285, after all, permits courts to award fees in "exceptional *cases*," 35 U.S.C. § 285 (emphasis added), while Rule 11 or the federal courts' inherent authority to impose sanctions tend to apply more comfortably to discrete instances of litigation misconduct. *Cf. Lieb v. Topstone Indus., Inc.*, 788 F.2d 151, 158 (3d Cir. 1986) ("Rule 11 may be applied to only a small segment of the litigation, but the Copyright Act looks to the whole of the case."). Including litigation conduct in the mix of relevant factors under § 285 will deter

the use of sharp and evasive tactics that prolong litigation for purely strategic purposes.

Allcare's conduct with respect to the other claim at issue in *Highmark*, claim 52, illustrates this. Claim 52 contained an element that required "entering ... data symbolic of patent symptoms for tentatively identifying a proposed mode of treatment." *Id.* at 19a. The district court concluded that this limitation covered only a system where a user enters in a patient's symptoms, and the system *automatically* returns the most likely diagnosis and a list of proposed treatments. *Id.* at 19a-20a. Because Highmark's system involved the user manually entering not only symptoms, but also possible diagnoses and treatments, it could not possibly infringe. *Id.*

Ultimately the Federal Circuit agreed wholeheartedly with the district court's decision on the merits, but it disagreed as to the appropriateness of fees. *Id.* at 19a. The panel majority accepted Allcare's argument, advanced for the first time on appeal, that a second possible embodiment of its system might plausibly entail a user manually entering symptoms, diagnoses, and treatments, like Highmark's system. *Id.* at 20a. Applying the requirement that the losing party's position be "objectively unreasonable"—not just unreasonable as argued by the losing party—the panel majority reversed.

The objective reasonableness of a party's infringement allegations are of course an important piece of the analysis under § 285. But a test that treats it as a necessary condition in all cases fails to capture the real story in cases like this one.

Allcare did not advance the argument the Federal Circuit ultimately relied upon before the district court. In other words, it was not itself able to articulate a reasonable justification for maintaining its infringement allegations. Even if it had, though, its own expert conceded as early as June 29, 2007, that Allcare's proposed construction of claim 52—the one that would include entry of symptoms, diagnoses, and treatments—was untenable. *Id.* at 73a. Allcare persisted nonetheless as its expert's concession was adopted in the special master's report, asserted at summary judgment, and eventually relied upon when the district court finally granted summary judgment on August 28, 2008. *Id.* at 48a, 73a-76a. Not only that, Allcare kept its suit alive through evasive tactics, twice shifting its proposed claim construction with respect to claim 52. As the district court concluded, "Allcare's conduct was not part of normal litigation conduct." *Id.* at 77a. Allcare had "continued to pursue meritless allegations as leverage in relation to the opposing party's contentions." *Id.* at 78a.

Section 285 should recognize an obligation on the part of litigants not to multiply or prolong litigation needlessly, engage in unfair or evasive tactics, or otherwise undermine the integrity of the proceedings. Even where, in theory, some reasonable attorney could believe that a suit has a bare chance of success on the merits, fees should still be available where the manifest purpose of the suit, as evidenced by a party's motivations, positions, and conduct, is to extort a settlement. A test that accounts for this broad set of related factors will better serve the goals of patent law.

CONCLUSION

For the foregoing reasons, the Court should adopt a test for determining whether a case brought under the patent laws is "exceptional" that takes into account the nature and motivations of the parties to the litigation, the merits of the parties' positions, and the parties' conduct both before and during litigation.

Respectfully submitted,

E. Joshua Rosenkranz
Christopher J. Cariello
ORRICK, HERRINGTON & SUTCLIFFE LLP
51 W. 52ND ST.
New York, NY 10019
(212) 506-5380
jrosenkranz@orrick.com

Mark S. Davies*
Justin P. Bagdady
ORRICK, HERRINGTON & SUTCLIFFE LLP
1152 15th Street
Washington, D.C. 20005
(202) 339-8631
mark.davies@orrick.com
**Counsel of Record*

December 9, 2013

AMICUS CURIAE BRIEF

RECORD AND BRIEFS

No. 12-1163

FILED
DEC - 9 2013
OFFICE OF THE CLERK
SUPREME COURT, U.S.

IN THE

Supreme Court of the United States

HIGHMARK INC.,

Petitioner,

v.

ALLCARE HEALTH MANAGEMENT SYSTEMS, INC.,

Respondent.

ON WRIT OF CERTIORARI TO THE UNITED STATES COURT OF APPEALS FOR THE FEDERAL CIRCUIT

BRIEF OF BLUE CROSS BLUE SHIELD ASSOCIATION AS *AMICUS CURIAE* IN SUPPORT OF PETITIONER

ROGER G. WILSON
Senior Vice President, General Counsel and Corporate Secretary
BLUE CROSS BLUE SHIELD ASSOCIATION
225 N. Michigan Avenue
Chicago, IL 60601
(312) 297-6439

BRIAN H. PANDYA
Counsel of Record
JAMES H. WALLACE, JR.
JOHN B. WYSS
MICHAEL L. STURM
THOMAS R. MCCARTHY
WILEY REIN LLP
1776 K Street, NW
Washington, D.C. 20006
(202) 719-7000
bpandya@wileyrein.com

Counsel for Amicus Curiae

December 9, 2013

250598

COUNSEL PRESS
(800) 274-3321 • (800) 359-6859

Library of Congress
Law Library

TABLE OF CONTENTS

Page

TABLE OF CONTENTS i

TABLE OF CITED AUTHORITIES iii

INTEREST OF *AMICUS CURIAE* 1

INTRODUCTION AND SUMMARY OF THE ARGUMENT 2

ARGUMENT 6

I. THE FACT-INTENSIVE NATURE OF SECTION 285 FEE AWARDS WARRANTS THE SAME SORT OF DEFERENTIAL REVIEW THIS COURT HAS ALWAYS RESERVED FOR ATTORNEY FEE AWARDS 6

A. Patent Infringement Lawsuits Tend To Be Protracted, Expensive Litigation, Which Makes Section 285 Awards Particularly Fact Bound. 7

B. Recognizing That Attorney Fee Awards Are Inherently Fact-Bound, This Court Has Consistently Held That Fee Awards Must Be Reviewed Deferentially. 10

Table of Contents

Page

C. The 1952 Amendment To Section 285 Did Nothing To Disturb The Discretionary Nature Of Attorney Fee Awards And Thus Is No Reason To Depart From The Court's Traditional Approach Of Reviewing Fee Awards Deferentially 12

II. DEFERENTIAL REVIEW OF SECTION 285 AWARDS IS NECESSARY FOR THE ORDERLY ADMINISTRATION OF JUSTICE BECAUSE IT PRESERVES THE DISTRICT COURTS' ABILITY TO POLICE LITIGATION CONDUCT. 15

A. The Purpose Of Section 285 Fee Awards Is To Deter Frivolous Litigation and Abusive Litigation Tactics. 16

B. Subjecting Attorney Fees Awards To *De Novo* Review Will Weaken District Courts' Ability To Police Litigation Conduct And Thus Embolden Those Who Are Prone To File Frivolous Patent Suits And Employ Abusive Litigation Tactics 18

C. Preserving District Courts' Ability To Police Litigation Conduct Is Especially Important Given That Litigation By Non-Practicing Entities Has Doubled The Number Of Patent Lawsuits. 20

CONCLUSION 24

TABLE OF CITED AUTHORITIES

Page

CASES

Anderson v. City of Bessemer City,
470 U.S. 564 (1985) 19

Automated Business Cos. v. NEC America, Inc.,
202 F.3d 1353 (Fed. Cir. 2000) 17

Bard Peripheral Vascular, Inc. v. W.L. Gore & Associates, Inc.,
682 F.3d 1003 (Fed. Cir. 2012) 8

Berkla v. Corel Corp.,
302 F.3d 909 (9th Cir. 2002) 11

Brown v. Plata,
131 S. Ct. 1910 (2011) 12

Central Soya Co. v. Geo. A. Hormel & Co.,
723 F.2d 1573 (Fed. Cir. 1983) 16-17

Cooter & Gell v. Hartmarx Corp.,
496 U.S. 384 (1990) 11

Cybor Corp. v. FAS Technologies, Inc.,
138 F.3d 1448 (Fed. Cir. 1998) 11

DuBuit v. Harwell Enterprises, Inc.,
540 F.2d 690 (4th Cir. 1976) 14, 17

Eon-Net LP v. Flagstar Bancorp,
653 F.3d 1314 (Fed. Cir. 2011) 11

Cited Authorities

Page

First National Bank in Sioux Falls v. First National Bank S.D., 679 F.3d 763 (8th Cir. 2012) 11, 15

F.D. Rich Co. v. United States ex rel. Industrial Lumber Co., 417 U.S. 116 (1974) 10

Fogerty v. Fantasy, 510 U.S. 517 (1994) 14

Freytag v. Commissioner, 501 U.S. 868 (1991) 18

General Motors Corp. v. Devex Corp., 461 U.S. 648 (1983) 13

Goodheart Clothing Co. v. Laura Goodman Enterprises, Inc., 962 F.2d 268 (2d Cir. 1992) 14

Hoge Warren Zimmerman Co. v. Nourse & Co., 293 F.2d 779 (6th Cir. 1961) 13

Ji v. Bose Corp., 626 F.3d 116 (1st Cir. 2010) 14

Johnson v. Jones, 149 F.3d 494 (6th Cir. 1998) 15

Lilly v. Virginia, 527 U.S. 116 (1999) 12

Cited Authorities

Page

Lipscher v. LRP Publications, Inc.,
266 F.3d 1305 (11th Cir. 2001).....15

Mathis v. Spears,
857 F.2d 749 (Fed. Cir. 1988).....17

National Ass'n of Professional Baseball Leagues, Inc. v. Very Minor Leagues, Inc.,
223 F.3d 1143 (10th Cir. 2000).....15

National Business Forms & Printing, Inc. v. Ford Motor Co.,
671 F.3d 526 (5th Cir. 2012).....15

Newman v. Piggie Park Enterprises, Inc.,
390 U.S. 400 (1968).....10

Newport News Holdings Corp. v. Virtual City Vision, Inc.,
650 F.3d 423 (4th Cir. 2011).....15

Pennsylvania Crusher Co. v. Bethlehem Steel Co.,
193 F.2d 445 (3d Cir. 1951) 17

Pierce v. Underwood,
487 U.S. 552 (1988).....11

Professional Real Estate Investors, Inc. v. Columbia Pictures Industries, Inc.,
508 U.S. 49 (1993).....18

Cited Authorities

Page

Salve Regina College v. Russell,
499 U.S. 225 (1991) 12

In re Seagate Technology LLC,
497 F.3d 1360 (Fed. Cir. 2007) 8

Secalt S.A. v.
Wuxi Shenxi Construction Machinery Co.,
668 F.3d 677 (9th Cir. 2012) 15

Securacomm Consulting, Inc. v. Securacom Inc.,
224 F.3d 273 (3d Cir. 2000) 15

Talon, Inc. v. Union Slide Fastener, Inc.,
266 F.2d 731 (9th Cir. 1959) 13-14

TE-TA-MA Truth Foundation-Family of URI,
Inc. v. World Church of the Creator,
392 F.3d 248 (7th Cir. 2004) 15

STATUTES

7 U.S.C. § 2565 14

15 U.S.C. § 1117 14

17 U.S.C. § 505 14

35 U.S.C. § 284 8

35 U.S.C. § 285 ..... *passim*

Cited Authorities

Page

RULES

Sup. Ct. R. 37 1

LEGISLATIVE MATERIALS

H.R. 845, 113th Cong. (2013) 22

H.R. 2024, 113th Cong. (2013) 22

H.R. 2639, 113th Cong. (2013) 22

H.R. 2766, 113th Cong. (2013) 22

H.R. 3309, 113th Cong. (2013) 22

H.R. 3540, 113th Cong. (2013) 22

S. 866, 113th Cong. (2013) 22

S. 1013, 113th Cong. (2013) 22

S. 1612, 113th Cong. (2013) 22

S. 1720, 113th Cong. (2013) 22

OTHER AUTHORITIES

American Intellectual Property Law Ass'n, *2013 Report of the Economic Survey* (2013). . . . 4, 5, 7

Cited Authorities

Page

Brian T. Yeh, Cong. Research Serv., R42668, *An Overview of the "Patent Trolls" Debate* (2013).....5

James Beesen & Michael Meurer, *The Direct Costs from NPE Disputes (Bos. Univ. Sch. of Law, Law & Econ.* Research Paper No. 12-34, 2012) 21

Jim Kerstetter, *How much is that patent lawsuit going to cost you?*, CNET, Apr. 5, 2012, http://news.cnet.com/8301-32973_3-57409792-296/how-much-is-that-patent-lawsuit-going-to-cost-you 22

John R. Allison et al., Professors' Letter In Support of Patent Reform Legislation (Nov. 25, 2013) *available at* http://www.patentlyo.com/files/professorsletterontrolls.pdf 20

Merritt B. Fox, *Required Disclosure and Corporate Governance*, 62 Law & Contemp. Probs. 113 (1999) 5

P. J. Federico, Commentary on the New Patent Act, 35 U.S.C.A. 1 (1954).....13

Press Release, Rep. Bob Goodlatte, House Judiciary Committee Approves Patent Reform Bill (Nov. 20, 2013) 20

Cited Authorities

Page

Press Release, The White House, White House Task Force on High-Tech Patent Issues (June 4, 2013), (*available at* http://www.whitehouse.gov/the-press-office/2013/06/04/fact-sheet-white-house-task-force-high-tech-patent-issues) 20

Price Waterhouse Cooper, *2013 Patent Litigation Study: Big cases make headlines, while patent cases proliferate* (2013) 8

Randall R. Rader, C.J. Fed. Cir., Colleen V. Chien, and David Hricik, Op-Ed., *Make Patent Trolls Pay in Court*, N.Y. Times, June 4, 2013 22

Robin Feldman et al., *The AIA 500 Expanded: Effects of Patent Monetization Entities* (UC Hastings Research Paper No. 45 Apr. 9, 2013), *available at* http://ssrn.com/abstract=2247195. .....4, 21

Thomas E. Willging & Emery G. Lee III, *In Their Words - Attorney Views About Costs and Procedures in Federal Civil Litigation*, Federal Judicial Center (Mar. 2010) 7

United States Courts, Judicial Facts & Figures 2012, *available at* http://www.uscourts.gov/Statistics/JudicialFactsAndFigures/judicial-facts-figures-2012.aspx. 8

INTEREST OF *AMICUS CURIAE*[1]

The Blue Cross Blue Shield Association ("BCBSA") is the trade association that coordinates the national interests of the independent, locally operated Blue Cross and Blue Shield companies ("BCBSA Member Companies"). Together, the 37 independent, community-based, and locally operated BCBSA Member Companies provide health insurance benefits to nearly 100 million people—almost one-third of all Americans—in all 50 states, the District of Columbia, and Puerto Rico. The BCBSA Member Companies offer a variety of insurance products to all segments of the population, including large public and private employer groups, small businesses, and individuals.

Petitioner Highmark, Inc. ("Highmark") is a BCBSA Member Company, although BCBSA has had no involvement in the case and has no financial interest in its outcome. BCBSA has filed ten amicus briefs with the Court in the past ten years. This case interests BCBSA because of the high costs that patent litigations have imposed on a wide range of businesses in all sectors, from Member Companies such as Highmark to the entrepreneurs, small businesses, and large companies that purchase health insurance products from Member Companies. One way patent litigation costs can be held in check is through the proper application and review of attorney's fees awards under 35 U.S.C. § 285.

---

1. Respondent and Petitioner have both consented to the filing of this *amicus* brief under Supreme Court Rule 37. *Amicus* and its counsel represent that no party to this case nor its counsel authored this brief in whole or in part, and that no person other than *amicus* paid for or made a monetary contribution toward the preparation and submission of this brief.

INTRODUCTION AND SUMMARY OF THE ARGUMENT

The Federal Circuit's decision to inject *de novo* review into Section 285 awards distorts the proper allocation of judicial responsibility between federal trial and appellate courts and should be overturned. *De novo* appellate review of what are inherently factual determinations invades the traditional province of the district court and impedes the orderly administration of justice in the federal court system. These concerns are particularly acute in patent cases, which are some of the most complex, time-consuming, and expensive cases district courts face.

Awarding attorney's fees has historically been part of the trial court's inherent power to manage its docket and police litigation misconduct. There is good reason for placing this authority within the district courts rather than the circuit courts. A trial court has a comparative advantage over an appellate court in deciding whether to award attorney fees, as the trial court has a front seat view to the whole course of the litigation and the opportunity to view the entirety of the case firsthand, including the claims asserted and positions taken by the parties and the conduct and candor of the parties. The appellate court, on the other hand, has only a cold record and usually no more than twenty to thirty minutes of oral argument. This comparative advantage is particularly pronounced in patent infringement cases, to which trial courts devote a disproportionate amount of time, resources, and attention. To allow *de novo* review of such awards under these circumstances disrupts this traditional allocation of authority. Worse, it threatens to reduce the quality of attorney fee awards, because appellate courts are at a

comparative disadvantage in deciding whether to make such awards.

The case below is illustrates these points. The Northern District of Texas, after carefully reviewing the six-year history of the case, was "firmly convince[d]" that this case was "exceptional" under 35 U.S.C. § 285 because Respondent Allcare "had not done its homework when it began trolling for dollars and threatening litigation," Pet. App. 69a; continued to assert "meritless allegations after the lack of merit became apparent" and after they were proven to be "without support by its own expert's report and deposition testimony," apparently "as insurance or leverage," Pet. App. 77a-78a; "use[d] frivolous and vexatious tactics" in litigating the case, including the assertion of a frivolous *res judicata* defense, misrepresentations to another district court in support of its transfer motion, and flip-flopping its position on claim construction "without reasonable explanation" and after court ordered deadlines, "thus complicating Highmark's ability to advance its own claim construction and to defend against Allcare's elusive allegations," Pet. App. 82a-83a, 91a. The district court's exhaustive analysis of the six-year record culminated with an exceptional case finding and an award of "reasonable attorney fees" to Petitioner as "the prevailing party." 35 U.S.C. § 285.

Despite the district court's thorough analysis and lengthy account of Respondent's "frivolous and vexatious" conduct over the years the case was before that court, the Federal Circuit reversed, based on an argument that Respondent purportedly could have advanced—but did not— with respect to one patent claim (claim 52). The *de novo* review undertaken by the Federal Circuit impedes

the proper application of 35 U.S.C. § 285 by refusing to afford deference to a trial court's factual findings and thus inhibits the ability of trial courts to manage patent litigation.

When properly applied, Section 285 acts as a powerful tool to control the high cost of patent litigation, particularly in lawsuits filed by non-practicing entities ("NPEs") (and more specifically, lawsuits filed by patent-assertion entities ("PAEs"), or pejoratively, patent trolls—a subclass of NPEs formed for the sole purpose of acquiring and monetizing intellectual property developed by third-parties). From January 1, 2007 to December 31, 2008, NPEs filed 804 lawsuits, representing 17 percent of the 4,803 total patent infringement lawsuits filed. *See* Robin Feldman et al., *The AIA 500 Expanded: Effects of Patent Monetization Entities* app. A (UC Hastings Research Paper No. 45 Apr. 9, 2013), *available at* http://ssrn.com/abstract=2247195. In 2011 and 2012, NPEs alone filed 3,844 lawsuits, a 378% increase in filings. *Id.* In contrast, the number of patent lawsuits filed between competitors only increased by 6.7% during that same timespan. *Id.* As a result of skyrocketing NPE filings and the relatively flat increase in non-NPE filings, NPE suits represented the majority (54.6%) of the 8,196 patent cases files in the last two years. *Id.*

Litigating these lawsuits is costly. The American Intellectual Property Law Association's ("AIPLA") most recent annual survey of patent litigation reported that the average attorney's fees to defend a typical patent case through trial totaled $2.6 million. Am. Intellectual Prop. Law Ass'n, *2013 Report of the Economic Survey* 34 (2013). Most of those fees are discovery costs incurred on the front

end of the case—the average attorney's fees from filing to the completion of discovery are $1.4 million. *Id.* Thus, the majority of patent litigation costs are incurred prior to the summary judgment phase of the case, which is usually the earliest opportunity to defeat a non-meritorious claim.

Many of these costs are one-sided and borne primarily by patent defendants. PAEs typically have no operations, face little threat of counterclaims, and have fewer documents to produce and depositions to defend than practicing entities. In contrast, a large company accused of patent infringement can incur millions of dollars simply responding to discovery requests propounded by a PAE. Due to this asymmetry, and with PAEs losing 92% of cases adjudicated on the merits, many PAE lawsuits are the patent litigation equivalent to a "strike suit" in securities litigation—*i.e.*, the plaintiff makes a dubious claim for the purpose of gaining a settlement, before reaching litigation on the merits, for an amount equal to or lesser than the defendant's anticipated legal costs. Brian T. Yeh, Cong. Research Serv., R42668, *An Overview of the "Patent Trolls" Debate* 1 (2013); Merritt B. Fox, *Required Disclosure and Corporate Governance*, 62 Law & Contemp. Probs. 113, 119 (1999) (defining strike suit as a non-meritorious action brought to blackmail management into a settlement so that management can avoid the costly process of continued litigation). The best, and often only, weapon that parties sued by PAEs have to level the playing field and deter abusive litigation tactics is the threat of shifting attorney's fees "in exceptional cases." 35 U.S.C. § 285 ("The court in exceptional cases may award reasonable attorney fees to the prevailing party.").

However, if this new *de novo* review standard is upheld, the deterrent effect of Section 285 will be weakened, as parties will know that any award of attorney's fees by the district court will be less likely to stick. Parties will be emboldened to roll the dice on bad claims or defenses, knowing that if the claim fails and attorney's fees are awarded by the district court, they will get a clean slate at the Federal Circuit, with the ability to make a *post hoc* rationalization of their positions and conduct. This is especially so given the Federal Circuit panel majority's willingness to supply its own *post hoc* rationalizations for Respondent's conduct.

ARGUMENT

I. THE FACT-INTENSIVE NATURE OF SECTION 285 FEE AWARDS WARRANTS THE SAME SORT OF DEFERENTIAL REVIEW THIS COURT HAS ALWAYS RESERVED FOR ATTORNEY FEE AWARDS.

An award of attorney's fees is not based on a single snapshot or point in the case but arises after the conclusion of often lengthy litigation. By the time attorney's fees are awarded or denied, the trial court has lived with the case, often for a period of years, and thus has gained the type of in-depth understanding of the parties' respective claims and defenses that can result only from having had the chance to observe first-hand litigants' conduct and credibility. The district court is thus intimately familiar with the entirety of the proceedings and best positioned to determine whether or not a case is "exceptional."

A. Patent Infringement Lawsuits Tend To Be Protracted, Expensive Litigation, Which Makes Section 285 Awards Particularly Fact Bound.

Patent lawsuits are among the most expensive and time consuming civil cases to litigate. The complex nature of patent infringement lawsuits weighs in favor of granting deference to exceptional case findings by the district court.

The AIPLA estimates that a patent lawsuit involving $1 million to $25 million in claimed damages (i.e., a typical patent case) costs each party, on average, $1.4 million in attorney's fees through discovery and $2.6 million in attorney's fees through trial. Am. Intellectual Prop. Law Ass'n, *supra* at 34. Patent cases "are costly to litigate because they are very document-intensive and involve complex questions of science and technology. In addition, patent cases have a level of procedural complexity not found in ordinary civil litigation." *See* Thomas E. Willging & Emery G. Lee III, *In Their Words - Attorney Views About Costs and Procedures in Federal Civil Litigation*, Federal Judicial Center, 7 (Mar. 2010). Such procedural complexity can include, at the pretrial stage alone, evidentiary hearings conducted in connection with motions for preliminary injunctions, *Markman* hearings on claim construction, and disputes about scientific and analytical methods used by technical and damages experts. *Id.*

The result of this complexity means that district courts often spend more time with patent cases, and are thus more familiar with the underlying record, than typical civil cases. The median time to trial for patent infringement cases is 2.5 years, compared to 1.96 years

in other civil cases.[2] *See* Price Waterhouse Coopers, *2013 Patent Litigation Study: Big cases make headlines, while patent cases proliferate*, 21-22 & Chart 7d (2013); United States Courts, *Judicial Facts & Figures 2012*, Table 6.3, *available at* http://www.uscourts.gov/Statistics/JudicialFactsAndFigures/judicial-facts-figures-2012.aspx. After spending this amount of time with the case, district courts should be given deference in deciding whether the case is exceptional.[3]

---

2. And the time to trial in patent cases may be skewed by the fact that 37% of all patent cases brought to trial were filed in the six districts with, nationally, the shortest average times to trial (*i.e.*, Eastern District of Virginia, Western District of Wisconsin, Middle District of Florida, District of Delaware, Southern District of Texas, and Eastern District of Texas). *See* Price Waterhouse Coopers, *2013 Patent Litigation Study: Big cases make headlines, while patent cases proliferate*, at 21-22 & Chart 7d (2013).

3. In this regard, attorney's fees awards are unique from other concepts in patent law, such as willfulness under 35 U.S.C. § 284, which focuses on discrete past actions—*i.e.*, whether upon receiving notice of alleged infringement, a defendant acted despite an objectively high likelihood of patent infringement. *Bard Peripheral Vascular, Inc.* v. *W.L. Gore & Assocs., Inc.*, 682 F.3d 1003, 1006 (Fed. Cir. 2012) ("While the . . . second prong of *Seagate* may be a question of fact, *Seagate* also requires a threshold determination of objective recklessness. That determination entails an objective assessment of potential defenses based on the risk presented by the patent."); *In re Seagate Tech. LLC*, 497 F.3d 1360, 1371 (Fed. Cir. 2007). Attorney's fees awards are also distinguishable from other litigation concepts, such as *Noerr-Pennington* antitrust immunity, which calls on the judge to determine whether a claim is objectively baseless as a matter of law at the time of filing. *Prof'l Real Estate Investors, Inc.* v. *Columbia Pictures Indus., Inc.*, 508 U.S. 49, 60-61 (1993). The Federal Circuit's importation of an objective prong subject to *de novo* review into Section 285 ignores these fundamental

The underlying case illustrates the fact-intensive nature of Section 285 awards. Here, the district court that lived with the case for years awarded attorney's fees only after finding that: Respondent Allcare's assertions that two patent claims were infringed "were frivolous" and that "Allcare engaged in litigation misconduct" by (a) "asserting a frivolous position based on res judicata and collateral estoppel," (b) "shifting its claim construction position through the course of the proceedings before the district court," and (c) "making misrepresentations to the [transferor court] in connection with a motion to transfer venue." Pet. App. 6a-7a. Thus, the district court's decision to award attorney's fees was based upon the trial court's view of the entire conduct of the case, taking into consideration the claims asserted, the positions taken, how long a position was taken, the frivolity of claims or positions in light of facts known or readily available, and a party's lack of candor, delay, and scorched-earth tactics—all of which taken together imposed unreasonable, unnecessary, and unjust attorney's fees and costs on Petitioner Highmark.

Rather than focusing on the totality of the case and deferring to the district court, which viewed the case up close for its entire duration, the Federal Circuit's review of the exceptional case determination—already narrowed by a limited appellate record—focused on a discrete claim construction issue in concluding that Allcare's infringement claim was not objectively baseless. Despite

---

differences in attorney's fees awards, which by their very nature are fact intensive, based on the undividable totality of the record, and are uniformly committed to the sound discretion of the trial court under this Court's precedents.

affirming the district court's rejection of Allcare's claim construction position, the Federal Circuit explained that Allcare hypothetically could have made a claim construction argument that could have supported its infringement position. Pet. App. 21a ("While Allcare may not have pointed to the specification as an argument in support of its theory, this theory as to the scope of claim 52 was argued repeatedly by Allcare."). This *sua sponte* endeavor to justify Allcare's otherwise baseless claim construction position underscores the degree to which the panel majority's decision to grant itself the authority to engage in *de novo* review distorted the administration of justice and exemplifies why Section 285 awards should be reviewed deferentially.

B. Recognizing That Attorney Fee Awards Are Inherently Fact-Bound, This Court Has Consistently Held That Fee Awards Must Be Reviewed Deferentially.

The Federal Circuit's decision to grant itself *de novo* review of exceptional case determinations conflicts with the broad discretion that district courts have historically been afforded by this Court when it comes to awarding attorney's fees. This Court's precedents have long confirmed the inherent authority of trial courts to assess attorney's fees for abusive litigation conduct, which includes the filing and maintenance of frivolous cases. *See, e.g., F.D. Rich Co. v. United States ex rel. Indus. Lumber Co.*, 417 U.S. 116, 129 (1974); *Newman v. Piggie Park Enters., Inc.*, 390 U.S. 400, 402 n.4 (1968). Such matters of inherent authority are reviewed deferentially.

The fact that attorney's fees awards under Section 285 arise from statute rather than the trial court's common

law inherent powers does not support the Federal Circuit's decision to review such awards *de novo*. Other similar statute or rule-based awards are reviewed for an abuse of discretion. *E.g.*, *Cooter & Gell v. Hartmarx Corp.*, 496 U.S. 384, 385 (1990) ("A court of appeals should apply an abuse-of-discretion standard in reviewing all aspects of a district court's decision in a Rule 11 proceeding."); *Pierce v. Underwood*, 487 U.S. 552, 571 (1988) (EAJA attorney fee awards are reviewed for abuse of discretion); *Berkla v. Corel Corp.*, 302 F.3d 909, 917 (9th Cir. 2002) (attorney fees awarded under the Copyright Act are reviewed for an abuse of discretion); *First Nat'l Bank in Sioux Falls v. First Nat'l Bank S.D.*, 679 F.3d 763, 771 (8th Cir. 2012) (attorney fees awarded under the Lanham Act are reviewed for an abuse of discretion).[4]

The standard of review for Section 285 should be placed in line with this Court's precedents, which have stated that mixed questions of law and fact are reviewed deferentially "when it appears that the district court is 'better positioned' than the appellate court to decide the

---

4. Curiously, just two years ago, the Federal Circuit affirmed that Section 285 determinations are reviewed for clear error, stating that "the district court has lived with the case and the lawyers for an extended period. Having only the briefs and the cold record, and with counsel appearing before [the appellate court] for only a short period of time, [the appellate court is] not in the position to second-guess the trial court's judgment." *Eon-Net LP v. Flagstar Bancorp*, 653 F.3d 1314, 1324 (Fed. Cir. 2011). *See also Cybor Corp. v. FAS Techs., Inc.*, 138 F.3d 1448, 1460 (Fed. Cir. 1998) (stating that attorney's fees awards are mixed questions of law and fact subject to clear error review). Thus, until the present case, the Federal Circuit applied a correct standard of appellate review. Its decision to change the standard of review to *de novo* review for an admitted mixed question of law and fact should be reversed.

issue in question or that probing appellate scrutiny will not contribute to the clarity of legal doctrine." *Salve Regina Coll. v. Russell*, 499 U.S. 225, 233 (1991) (quoting *Miller v. Fenton*, 474 U.S. 104, 114 (1985))). *See also Brown v. Plata*, 131 S. Ct. 1910, 1932 (2011) ("Because the 'district court is 'better positioned' . . . to decide the issue,' our review of the three-judge court's primary cause determination is deferential." (alteration in original) (citation omitted)); *Lilly v. Virginia*, 527 U.S. 116, 148-49 (1999) (Rehnquist, C.J., concurring) ("We have said that 'deferential review of mixed questions of law and fact is warranted when it appears that the district court is 'better positioned' than the appellate court to decide the issue in question or that probing appellate scrutiny will not contribute to the clarity of legal doctrine.'" (citation omitted)).

District courts are "better positioned" to determine when a case is "exceptional" within the meaning of Section 285 because any legal issues involved are inextricably intertwined with the district court's supervision of the entire course of litigation and accompanying factual findings. And because fee awards are "backwards-looking" and undertaken "in the light of the full record," Pet. App. 12a-13a, *de novo* review of a fee award determination will not contribute to the clarity of legal doctrine.

C. The 1952 Amendment To Section 285 Did Nothing To Disturb The Discretionary Nature Of Attorney Fee Awards And Thus Is No Reason To Depart From The Court's Traditional Approach Of Reviewing Fee Awards Deferentially

In the decision below, the Federal Circuit misinterpreted the meaning of "exceptional cases," and

the significance of the addition of that phrase to the Patent Act in 1952, in concluding that the "exceptional case" requirement of Section 285 permits *de novo* review of awards under that section. Specifically, in denying *en banc* review of the underlying case, the Federal Circuit stated that "Section 285, as originally enacted [in 1946], provided that the district court 'may in its discretion award reasonable attorneys' fees.' The 1952 Patent Act deleted the 'in its discretion' language and replaced it with the 'exceptional case' standard that exists today." Pet. App. 186a (citation omitted). However, this revision did not alter the meaning of the statute. *See* P.J. Federico, Commentary on the New Patent Act, 35 U.S.C.A. 1, 56 (1954) ([T]he new Section 285 "is substantially the same as the corresponding sentence of the old statute.").[5]

Cases from shortly after the enactment of Section 285 in 1952 (and from well before the creation of the Federal Circuit in 1982) confirm that the addition of the phrase "exceptional case" to the statute only imposed a substantive standard for determining when attorney's fees are awarded but did not alter the standard of appellate review. *See, e.g., Hoge Warren Zimmerman Co. v. Nourse & Co.*, 293 F.2d 779, 783 (6th Cir. 1961) ("[T]he substitution of the phrase 'in exceptional cases' has not done away with the discretionary feature."); *Talon, Inc. v. Union*

---

5. Additionally, this Court has acknowledged that similar 1952 amendments to the 1946 Patent Act were "merely reorganization in language to clarify the statement of the statutes" and were not substantive revisions to the statute. *See General Motors Corp. v. Devex Corp.*, 461 U.S. 648, 651 n. 6, (1983) (discussing the consolidation in 1952 of §§ 67 and 70 of the 1946 Code into present day § 284) (quoting H.R. Rep. No. 82-1923, at 10, 29 (1952), *reprinted in* 1952 U.S.C.C.A.N. 2394, 2403).

Slide Fastener, Inc., 266 F.2d 731, 738-39 (9th Cir. 1959) ("Both before and after the change in wording, this Court has interpreted this section as making the trial court's determination of attorney's fees final where it has clearly stated the basis for the award, except where there is an abuse of discretion amounting to caprice or an erroneous conception of the law on the part of the trial judge." (internal quotation marks omitted)). *See also DuBuit v. Harwell Enters., Inc.*, 540 F.2d 690, 693-94 (4th Cir. 1976) (discussing "[t]he legislative history of Section 285 as well as the predecessor statute" and finding that the 1952 revisions to the statute did not change the standard of appellate review). The Federal Circuit's standard of review appears to be a whole-cloth creation.

If this Court allows the Federal Circuit's decision to stand, Section 285 will also have a different standard of review than analogous attorney's fees provisions in other areas of intellectual property law. The phrase "exceptional case" appears in the counterparts to Section 285, including the Lanham (Trademark) Act, 15 U.S.C. § 1117 (awarding attorney's fees in "exceptional cases"), and the Plant Variety Protection Act, 7 U.S.C. § 2565 (same). And the Copyright Act, 17 U.S.C. § 505, gives the court discretion in awarding full costs or reasonable attorney's fees. *See Fogerty v. Fantasy*, 510 U.S. 517 (1994). Although this Court has not considered the issue, all of the circuits, save for one, have determined that "exceptional case" determinations under the Lanham Act are committed to the discretion of the trial court and that these determinations are deferentially reviewed at the appellate level. *See e.g., Ji v. Bose Corp.*, 626 F.3d 116, 129 (1st Cir. 2010); *Goodheart Clothing Co. v. Laura Goodman Enters., Inc.*, 962 F.2d 268, 272 (2d Cir. 1992);

Securacomm Consulting, Inc. v. Securacom Inc., 224 F.3d 273, 279 (3d Cir. 2000); *Newport News Holdings Corp. v. Virtual City Vision, Inc.*, 650 F.3d 423, 441 (4th Cir. 2011); *Nat'l Bus. Forms & Printing, Inc. v. Ford Motor Co.*, 671 F.3d 526, 537 (5th Cir. 2012); *Johnson v. Jones*, 149 F.3d 494, 503 (6th Cir. 1998); *TE-TA-MA Truth Found.-Family of URI, Inc. v. World Church of the Creator*, 392 F.3d 248, 257 (7th Cir. 2004); *First Nat'l Bank in Sioux Falls*, 679 F.3d at 771; *Nat'l Ass'n of Prof'l Baseball Leagues, Inc. v. Very Minor Leagues, Inc.*, 223 F.3d 1143, 1146 (10th Cir. 2000); *Lipscher v. LRP Publ'ns, Inc.*, 266 F.3d 1305, 1320-21 (11th Cir. 2001). The only circuit to hold differently is the Ninth Circuit, which applies *de novo* review to the exceptional-case determination but still applies abuse of discretion review to the ultimate decision to award fees if the case is, in fact, exceptional. *See Secalt S.A. v. Wuxi Shenxi Constr. Mach. Co.*, 668 F.3d 677, 687 (9th Cir. 2012). There is no reason that appellate review under Section 285 should be subject to a different standard from equivalent provisions in analogous areas of intellectual property law. To the contrary, in order to maintain the necessary deterrent effect of Section 285, deference to the district court's informed decision is particularly important.

II. DEFERENTIAL REVIEW OF SECTION 285 AWARDS IS NECESSARY FOR THE ORDERLY ADMINISTRATION OF JUSTICE BECAUSE IT PRESERVES THE DISTRICT COURTS' ABILITY TO POLICE LITIGATION CONDUCT.

Appellate courts are poorly situated to review attorney's fees awards *de novo*, as appellate review is based only on a limited opportunity to view excerpts of the trial court record. Key facts and observations available

to the district court are likely to be invisible in a cold appellate record. Such facts may include the candor and credibility of litigants and their counsel, the consistency of positions taken, efforts to block discovery or otherwise delay development of the factual record, continued advocacy of positions after facts no longer support the position, and ever-shifting or obfuscatory arguments designed to draw out the litigation. And these facts are precisely what the district court observed in this case, leading it to award fees.

Submitting Section 285 awards to *de novo* review will cause the Federal Circuit to simply substitute its own judgment, as it did in the case below, for the judgment of the district court when determining whether a party's litigation positions and conduct were sufficiently meritless (or otherwise exceptional) to warrant fee shifting. *De novo* review under these circumstances misallocates trial and appellate court resources and responsibilities, and it leaves district judges with less ability to police their cases.

A. The Purpose Of Section 285 Fee Awards Is To Deter Frivolous Litigation and Abusive Litigation Tactics.

At its most basic level, Section 285 is aimed at patrolling litigation—a task best left to the discretion of the trial court. Courts have long recognized that Section 285, by creating an exception to the American rule that each party bears its litigation costs, seeks "to discourage conduct which fell within the scope of 'exceptional' by requiring the party acting exceptionally to bear the expenses of the opposing party." *See Central Soya Co. v. Geo. A. Hormel & Co.*, 723 F.2d 1573, 1578 (Fed. Cir.

1983) ("The purpose of § 285 is, in a proper case and in the discretion of the trial judge, to compensate the prevailing party for its monetary outlays in the prosecution or defense of the suit."); *see also DuBuit*, 540 F.2d at 694 (Section 285 "represents a departure from the usual rule in this country that counsel fees are not awardable to the prevailing party in an action at law" and its invocation "should be based upon a finding of unfairness or bad faith in the conduct of the losing party, or some other equitable consideration of equal force, which makes it grossly unjust that the prevailing party be left to bear the burden of his own counsel fees.") (quotation marks and citation omitted).

Section 285 thus regulates both the quality of cases filed and the conduct of such cases, all of which are traditionally provinces of the district court. *See Mathis v. Spears*, 857 F.2d 749, 754 (Fed. Cir. 1988) ("No award under Section 285 can fully compensate a defendant subjected to bad faith litigation, *e.g.*, for loss of executives' time and missed business opportunities," but "when confronted with litigation brought in bad faith, a court's exercise of its inherent power to rectify, at least in part, the injustice done the defendant serves . . . to defend the court and the judicial process against abuse."); *see also Automated Bus. Cos. v. NEC Am., Inc.*, 202 F.3d 1353, 1355 (Fed. Cir. 2000) ("[Section] 285 serves as a deterrent to improper bringing of clearly unwarranted suits for patent infringement") (quotation marks and citation omitted); *Pa. Crusher Co. v. Bethlehem Steel Co.*, 193 F.2d 445, 450-51 (3d Cir. 1951) ("[E]ven though the trial judge is given discretion [to award fees] . . . . [t]he provision was designed to prevent a gross injustice to an alleged infringer," for example, through "vexatious or unjustified litigation.").

B. Subjecting Attorney Fees Awards To *De Novo* Review Will Weaken District Courts' Ability To Police Litigation Conduct And Thus Embolden Those Who Are Prone To File Frivolous Patent Suits And Employ Abusive Litigation Tactics

With the average patent case costing millions of dollars to litigate, the threat of a district court's awarding attorney's fees to the prevailing party is a powerful deterrent to frivolous claims and litigation mischief. When invoked, Section 285 deters both patent holders and accused infringers from engaging in non-meritorious litigation that is motivated by a desire to consume or exhaust the resources of the other party rather than adjudicate legitimate claims. The Federal Circuit's new *de novo* review standard, however, weakens these deterrent effects by making it less likely that such an award will stand up on appellate review.

Unlike a district court, the Federal Circuit does not live with a case for years. Despite its expertise in patent law, the Federal Circuit is no different from any other appellate court in that it has less familiarity than the trial court with the contours and nuances of a case. As was apparently the case here, exceptional case determinations are often influenced by the live conduct of the parties during the litigation, but such facts are often invisible in the cold appellate record. In essence, turning Section 285 into a *de novo* determination means that a party that engages in vexatious litigation at the trial court gets a clean slate at the appellate court to excuse its conduct. Such a standard conflicts with the maxim that "trial on the merits . . . is the main event and not simply a tryout on the road to appellate review." *E.g.*, *Freytag v. Comm'r*, 501 U.S. 868, 895 (1991) (quotation marks omitted).

If required to undertake *de novo* review, the Federal Circuit—even if it desired to employ judicial restraint or defer to the trial judge—will be *required*, because of the standard of review, to substitute its own judgment for the judgment of the trial court when reviewing exceptional case findings and attorney's fees awards. Doing so will often lead the Federal Circuit to reach a different conclusion because it has only the sterile record before it. Because exceptional case determinations are inherently fact-intensive and turn on the candor, conduct, and credibility of the parties, this approach overrides the fact-finding role of district courts. *See Anderson v. City of Bessemer City*, 470 U.S. 564, 575 (1985) ("[T]he parties to a case on appeal have already been forced to concentrate their energies and resources on persuading the trial judge that their account of the facts is the correct one; requiring them to persuade three more judges at the appellate level is requiring too much."). Perhaps worse, *de novo* review is likely to impair the quality of attorney's fee awards given the appellate court's comparative disadvantage in evaluating the respective positions and course of conduct of the parties throughout the entire proceedings before the trial court.

Reviewing Section 285 awards *de novo* will mean that more exceptional case findings will be overturned and that fewer cases will ultimately result in the award of attorney's fees under Section 285. The decision below has thus diminished the predictability of fee awards and lessened the likelihood that such awards will survive on appeal. As a result, litigants necessarily will be less likely to see Section 285 as a deterrent to questionable filings and conduct.

C. Preserving District Courts' Ability To Police Litigation Conduct Is Especially Important Given That Litigation By Non-Practicing Entities Has Doubled The Number Of Patent Lawsuits.

The number and cost of patent infringement lawsuits has recently drawn national attention from scholars, Congress, and the White House.[6] And as noted above, the number of patent lawsuits has nearly doubled in the past five years, with much of that increase driven by lawsuits filed by NPEs. In 2007-08, NPEs filed 804

---

6. *See e.g.*, John R. Allison et al., Professors' Letter In Support of Patent Reform Legislation (Nov. 25, 2013) *available at* http://www.patentlyo.com/files/professorsletterontrolls.pdf ("The magnitude and front-loaded nature of patent litigation expenses creates an opportunity for abuse. Patent holders can file suit and quickly impose large discovery costs on their opponents regardless of the validity of their patent rights and the merits of their infringement allegations. Companies accused of infringement, thus, have a strong incentive to fold and settle patent suits early, even when they believe the claims against them are meritless."); Press Release, Rep. Bob Goodlatte, House Judiciary Committee Approves Patent Reform Bill (Nov. 20, 2013), ("Abusive patent litigation is having a significant impact on American innovation, needlessly costing small and large businesses alike tens of billions of dollars every year—resources that could have been used to create innovative new products and services."); Press Release, The White House, White House Task Force on High-Tech Patent Issues (June 4, 2013), (*available at* http://www.whitehouse.gov/the-press-office/2013/06/04/fact-sheet-white-house-task-force-high-tech-patent-issues) ("[I]nnovators continue to face challenges from Patent Assertion Entities (PAEs), companies that, in the President's words 'don't actually produce anything themselves,' and instead develop a business model 'to essentially leverage and hijack somebody else's idea and see if they can extort some money out of them.'").

lawsuits, representing 17 percent of the 4,803 total patent infringement lawsuits filed. *See* Feldman, *supra*, at app. A. In 2011-12, NPEs alone filed 3,844 lawsuits, representing 54.6% of the 8,196 patent cases filed. *Id.*

The collective impact of all these cases is substantial. One study estimated that corporations spent $29 billion defending NPE lawsuits in 2011. *See* James Beesen & Michael Meurer, *The Direct Costs from NPE Disputes*, 18-19 (Bos. Univ. Sch. of Law, Law & Econ. Research Paper No. 12-34, 2012). This number is extraordinarily high because many patent litigation costs are fixed costs and not tied to the amount in controversy. For example, parties routinely spend hundreds of thousands of dollars, if not millions of dollars, collecting and reviewing electronically stored information. Depositions and expert witnesses can be equally expensive. Although litigants typically spend more litigating a case when tens or hundreds of millions of dollars in damages are claimed, the cost of defending a case with only one million dollars in claimed damages remains substantial, as set forth below:

The cost of fighting a patent lawsuit

Planning to file a patent lawsuit or have to defend against one?
Your legal bills are going to add up fast

How much could you lose?	2085	2011
Less than $1 million at risk		
- End of discovery	$350,000	$350,000
- All costs	$650,000	$650,000
$1 million to $25 million at risk		
-End of discovery	$1.25 million	$1.5 million
-All costs	$2 million	$2.5 million
More than $25 million at risk		
-End of discovery	$3 million	$3 million
-All costs	$4.5 million	$5 million

Source: Report of the Economic Survey 2013, American Intellectual Property Law Association

Fig. 1. Jim Kerstetter, *How much is that patent lawsuit going to cost you?*, CNET, Apr. 5, 2012, http://news.cnet.com/8301-32973_3-57409792-296/how-much-is-that-patent-lawsuit-going-to-cost-you/ (citing Am. Intellectual Prop. Law Ass'n, *supra*).

It should come as no surprise then that many companies accused of patent infringement choose to settle cases, irrespective of their merits, to avoid incurring these costs. Quite simply, a party can win a patent case but lose millions of dollars in the process. For this reason, nine pieces of legislation aimed at curbing NPE lawsuits (and more specifically, the PAE breed of NPE lawsuits) and associated patent litigation costs have been introduced in the current term of the 113th Congress.[7] At least five bills have specifically included provisions aimed at attorney's fees shifting.[8] However, many of these perceived programs can be fixed by simply ensuring that Section 285 is properly applied and deferentially reviewed. *See* Randall R. Rader, C.J. Fed. Cir., Colleen V. Chien, and David Hricik, Op-Ed., *Make Patent Trolls Pay in Court*, N.Y. Times, June 4, 2013, at A25 ("Section 285 is

---

7. *See* Innovation Act, H.R. 3309, 113th Cong. (2013); Patent Transparency and Improvements Act, S. 1720, 113th Cong. (2013); Patent Quality Improvement Act, S. 866, 113th Cong. (2013); Patent Abuse Reduction Act, S. 1013, 113th Cong. (2013); Patent Litigation Integrity Act, S. 1612, 113th Cong. (2013); Demand Letter Transparency Act, H.R. 3540, 113th Cong. (2013); Patent Litigation and Innovation Act, H.R. 2639, 113th Cong. (2013); Saving High-Tech Innovators from Egregious Legal Disputes Act, H.R. 845, 113th Cong. (2013); Stopping the Offensive Use of Patents Act, H.R. 2766, 113th Cong. (2013); End Anonymous Patents Act, H.R. 2024, 113th Cong. (2013).

8. *See* H.R. 3309; H.R. 845; H.R. 2639; S. 1013; S. 1612.

flexible enough to help defend against trolls. And even though many cases settle, the prospect of paying fees will discourage aggressive suits and frivolous demands.").

Section 285 can play a critical role in regulating the quality of patent infringement lawsuits. Because Section 285 applies to both plaintiffs and defendants, it focuses the parties on matters of legitimate dispute and increases the quality of patent cases that are litigated in the federal courts. Specifically, Section 285 incentivizes patent holders and accused infringers to litigate only legitimate, good-faith disputes over patent infringement and validity. The prospect of a prevailing party recovering its attorney's fees in an "exceptional case" both: (a) deters patent holders from filing dubious cases with the main purpose of extracting settlements based on threatened litigation costs rather than the merits of the asserted infringement; and (b) encourages willful infringers to settle cases and enter into license agreements where the infringement is clear cut and in bad faith. If left to stand, however, the decision below will only embolden parties with dubious positions to litigate, knowing that they will have not one, but two *de novo* opportunities to avoid an exceptional case finding – all while clogging busy district courts with both meritless cases and meritorious cases opposed only by futile defenses. This Court thus should reverse the decision below in order to preserve the traditional allocation of power as between federal district and circuit courts and ensure that the district courts remain fully able to police litigation conduct and maintain the orderly administration of justice in patent cases.

CONCLUSION

For the foregoing reasons as well as those set forth by Petitioner, BCBSA requests that this Court overturn the Federal Circuit and hold that Section 285 awards are again deferentially reviewed.

Respectfully submitted,

ROGER G. WILSON
Senior Vice President, General Counsel and Corporate Secretary
BLUECROSS BLUESHIELD ASSOCIATION
225 N. Michigan Avenue
Chicago, IL 60601
(312) 297-6439

BRIAN H. PANDYA
Counsel of Record
JAMES H. WALLACE, JR.
JOHN B. WYSS
MICHAEL L. STURM
THOMAS R. MCCARTHY
WILEY REIN LLP
1776 K Street, NW
Washington, D.C. 20006
(202) 719-7000
bpandya@wileyrein.com

Counsel for Amicus Curiae

December 9, 2013

AMICUS CURIAE BRIEF

No. 12-1163

IN THE

Supreme Court of the United States

JAN 24 2014

HIGHMARK INC.,

Petitioner,

v.

ALLCARE HEALTH MANAGEMENT SYSTEMS, INC.,

Respondent.

ON WRIT OF CERTIORARI TO THE UNITED STATES COURT OF APPEALS FOR THE FEDERAL CIRCUIT

BRIEF OF BOSTON PATENT LAW ASSOCIATION AS *AMICUS CURIAE* IN SUPPORT OF RESPONDENT ALLCARE HEALTH MANAGEMENT SYSTEMS, INC.

ERIK PAUL BELT
Counsel of Record
VICE PRESIDENT, BOSTON PATENT LAW ASSOCIATION
WYLEY SAYRE PROCTOR
MCCARTER & ENGLISH, LLP
265 Franklin Street
Boston, MA 02110
(617) 449-6500
ebelt@mccarter.com

Counsel for Amicus Curiae Boston Patent Law Association

251618

COUNSEL PRESS
(800) 274-3321 • (800) 359-6859

TABLE OF CONTENTS

Page

TABLE OF CONTENTS i

TABLE OF CITED AUTHORITIES iii

INTEREST OF *AMICUS CURIAE* 1

INTRODUCTION 2

SUMMARY OF ARGUMENT 2

ARGUMENT 4

I. THE EXCEPTIONAL CASE STANDARD UNDER 35 U.S.C. § 285 REQUIRES THE PERSPECTIVE THAT COMES WITH *DE NOVO* REVIEW 4

II. EXPERIENCE WITH PATENT LAW, NOT PERSONAL OBSERVATION OF THE LITIGANTS, IS RELEVANT TO AN OBJECTIVE ASSESSMENT OF THE MERITS 10

A. District Court's Opportunity to Observe the Witnesses and Parties During Litigation Plays No Role in the Objective Baselessness Inquiry 10

B. The Federal Circuit Is Uniquely Positioned to Make Objective Baselessness Determinations 13

Table of Contents

Page

III. *DE NOVO* REVIEW HAS NOTHING TO DO WITH PATENT TROLLS 16

CONCLUSION 19

TABLE OF CITED AUTHORITIES

Page

FEDERAL CASES

Amsted Indus. Inc. v. Buckeye Steel Castings Co.,
24 F.3d 178 (Fed. Cir. 1994).....17

Automated Bus. Cos. v. NEC America, Inc.,
202 F.3d 1353 (Fed. Cir. 2000).....17

Bayer Aktiengesellschaft v.
Duphar Int'l Research B.V.,
738 F.2d 1237 (Fed. Cir. 1984).....12

Beckman Instruments, Inc. v. LKB Produkter AB,
892 F.2d 1547 (Fed. Cir. 1989).....4

Brooks Furniture Mfg., Inc. v. Dutailier Int'l, Inc.,
393 F.3d 1378 (Fed. Cir. 2005).....4, 8, 10, 11

Highmark, Inc. v. Allcare Health Mgmt. Sys., Inc.,
687 F.3d 1300 (Fed. Cir. 2012).....5, 11

Highmark, Inc. v. Allcare Health Mgmt. Sys., Inc.,
701 F.3d 1351 (Fed. Cir. 2012).....13

Kilopass Tech., Inc. v. Sidense Corp.,
738 F.3d 1302 (Fed. Cir. 2013).....8, 18

Markman v. Westview Instruments, Inc.,
517 U.S. 370 (1996).....7, 14, 16

Cited Authorities

Page

Miller v. Fenton,
474 U.S. 104 (1985) 14

Monolithic Power Sys., Inc. v. O2 Micro Int'l Ltd.,
726 F.3d 1359 (Fed. Cir. 2013) 10, 16

Nilssen v. Osram Sylvania, Inc.,
528 F.3d 1352 (Fed. Cir. 2008) 10

Octane Fitness, LLC v. Icon Health & Fitness, Inc.,
No. 12-1184 5

Park-In-Theatres v. Perkins,
190 F.2d 137 (9th Cir. 1951) 6

Powell v. Home Depot U.S.A., Inc.,
663 F.3d 1221 (Fed. Cir. 2011) 17

Salve Regina Coll. v. Russell,
499 U.S. 225 (1991) 14, 15

Sun-Tek Indus., Inc. v. Kennedy Sky Lites, Inc.,
929 F.2d 676 (Fed. Cir. 1991) 12

Taurus IP, LLC v. DaimlerChrysler Corp.,
726 F.3d 1306 (Fed. Cir. 2013) 17, 18

Warner-Jenkinson Co., Inc. v.
Hilton Davis Chem. Co.,
520 U.S. 17 (1997) 14

Cited Authorities

Page

FEDERAL STATUTES AND LEGISLATIVE HISTORY

28 U.S.C. § 1295 ..... 7, 15

35 U.S.C. § 285 ..... *passim*

H.R. Rep. No. 97-312 (1981) 7, 16

S. Rep. No. 79-1503 (1946) 17, 18

RULES

Sup. Ct. R. 37.6 1

Fed. R. Civ. P. 11 4

OTHER AUTHORITIES

United States Court of Appeals for the Federal Circuit Statistics, Appeals Filed, by Category, *at* http://www.cafc.uscourts.gov/the-court/statistics.html 15

United States Court of Appeals for the Federal Circuit Statistics, Appeals Filed, Terminated, and Pending, *at* http://www.cafc.uscourts.gov/the-court/statistics.html 15

United States Court of Appeals for the Federal Circuit Statistics, Filings of Patent Infringement Appeals from the U.S. District Courts, *at* http://www.cafc.uscourts.gov/the-court/statistics.html ... 14

INTEREST OF *AMICUS CURIAE*

The Boston Patent Law Association ("BPLA") respectfully submits this *amicus curiae* brief in support of the Respondent, Allcare Health Management Systems, Inc.[1]

The BPLA is a non-profit association of over 900 intellectual property professionals that offers programs and forums for the exchange of ideas and information about patents and other intellectual property rights. The BPLA seeks to promote a healthy and balanced patent system, which, in turn, fosters innovation and bolsters the American economy. Departure from the current *de novo* standard of review of objective baselessness findings in exceptional case determinations under 35 U.S.C. § 285 may chill zealous advocacy in patent litigation—for both plaintiffs *and* defendants—and deprive litigants and district courts of valuable legal precedent. As such, this case evokes the BPLA's interest.

---

1. Pursuant to Supreme Court Rule 37.6, no party or its counsel authored any part of this brief. No person or entity, other than the BPLA and its counsel, McCarter & English, LLP, contributed money for the preparation or submission of this brief. This brief is solely the work of the BPLA and reflects its consensus view. The stated arguments and positions do not necessarily reflect the views of any individual BPLA member, associated firm, or client of a member. All legal work to prepare and submit this brief was contributed *pro bono* by McCarter & English, LLP. Blanket consent to the filing of *amicus curiae* briefs in support of either party or neither party was filed by counsel for Petitioner Highmark Inc. on November 8, 2013, and by counsel for Respondent Allcare Health Management Systems, Inc. on December 12, 2013.

INTRODUCTION

The BPLA believes that *de novo* review of the objective baselessness test for exceptionality under 35 U.S.C. § 285 is the appropriate standard of review. All attorneys have the duty to zealously represent their clients. At times, this zealous advocacy requires litigants to take positions that are aggressive or novel, testing the current boundaries of patent law. As long as these positions are advanced within the recognized constructs of law, such aggressive advocacy is not merely permitted but is, and should be, encouraged. Indeed, the pursuit of groundbreaking legal theories is precisely the manner in which the common law develops over time. The Court of Appeals for the Federal Circuit, which reviews hundreds of patent cases each year and thus sees far more patent issues than any individual district court ever could, is uniquely qualified to determine whether a particular position asserted in patent litigation crosses the line from zealous advocacy to objective baselessness. On the other hand, allowing district courts deference in assessing the objective merits of patent claims or defenses will discourage litigants from developing and pressing ground-breaking or aggressive arguments in patent litigation. As a result, both patent owners and accused infringers will suffer because they will be deprived of the very best and most zealous advocacy.

SUMMARY OF ARGUMENT

De novo review of an objective baselessness determination is proper for at least the following reasons:

I. The statute at issue, 35 U.S.C. § 285, allows fee shifting in "exceptional" cases. Exceptionality, in turn, requires perspective. Not just any case can or should be

considered exceptional. The Federal Circuit's breadth of experience with patent cases since 1982 gives it unique perspective and, with it, the ability to distinguish between claims and defenses that have no merit from those that are legitimate, if novel or aggressive. Further, *de novo* review of objective assessments of the merits of patent claims or defenses will, over time, create a body of precedent that will prove invaluable to future litigants, discouraging frivolous litigation without chilling legitimate, if difficult, arguments. Finally, this collective body of law, reviewed *de novo* by the Federal Circuit, will allow district courts to make more reliable, predictable assessments of the objective merits of claims.

II. By its very nature, an objective assessment of the merits of a position does not require an assessment of the behavior or motivations of the litigants. Thus, a district court's observations of the witnesses, parties, and attorneys during the course of a single litigation does not enter into the objective baselessness analysis. Accordingly, when reviewing the objective baselessness of a suit, there is no need to defer to a district court's factual findings or observations of the litigants. On the other hand, the Federal Circuit, with experience and expertise in patent law unrivaled by any district court, is uniquely qualified to assess the objective merits of a patent claim or defense. Further, in keeping with its original purpose, the Federal Circuit can ensure that objective baselessness determinations are made consistently and reliably throughout the United States, strengthening the patent system.

III. Finally, the Petitioner and several *amici* have attempted to style Section 285 as a tool for controlling patent assertion entities, commonly known as "patent

trolls." Section 285, however, was never intended to be a weapon to punish or control any particular type of litigant. Rather, Section 285 is intended to compensate a prevailing party—whether plaintiff *or* defendant—for costs incurred during exceptional cases, when it would be "grossly unjust" to require the prevailing party to bear its own attorneys' fees. Exceptionality under Section 285 depends upon the conduct or positions—not the identity—of the losing party. The patent troll issue is currently the subject of debate and bills pending in Congress. This case, however, is not the proper forum for entering that debate, which should be left for another day.

ARGUMENT

I. THE EXCEPTIONAL CASE STANDARD UNDER 35 U.S.C. § 285 REQUIRES THE PERSPECTIVE THAT COMES WITH *DE NOVO* REVIEW

The Patent Act provides that "[t]he court in *exceptional* cases may award reasonable attorney fees to the prevailing party." 35 U.S.C. § 285 (emphasis added). A case may be "exceptional," and thus merit an award of attorneys' fees, when, for example, an accused infringer has willfully infringed the asserted patent or a patent owner has pursued a "frivolous suit." *See Beckman Instruments, Inc. v. LKB Produkter AB*, 892 F.2d 1547, 1551 (Fed. Cir. 1989). Other examples of exceptional circumstances that have merited fee shifting under Section 285 include misconduct during litigation, fraud or inequitable conduct in procuring a patent, and conduct that violates Federal Rule of Civil Procedure 11. *See Brooks Furniture Mfg., Inc. v. Dutailier Int'l, Inc.*, 393 F.3d 1378, 1381 (Fed. Cir. 2005).

Given the statutory wording, the focus should remain on what is an "exceptional" case and how a ruling of exceptionality should be reviewed on appeal. The Federal Circuit has clarified that, when exceptionality is based on the positions advanced by the losing party—whether patentee or accused infringer—the district court must conduct a two-step analysis in determining whether the case is exceptional: the court must assess both (1) the objective basis for the position and (2) the losing party's subjective intent in asserting that position. *See Highmark, Inc. v. Allcare Health Mgmt. Sys., Inc.*, 687 F.3d 1300, 1308-09 (Fed. Cir. 2012) (noting "[t]his same objective/subjective standard applies for both patentees asserting claims of infringement and alleged infringers defending against claims of infringement.")[2] The Federal Circuit reviews the objective prong of this test *de novo*. *Id.*

---

2. Currently, when the prevailing party is the accused infringer, the Federal Circuit applies the following test to determining exceptionality: absent misconduct during litigation or in procuring the patent, the patentee can only be sanctioned under Section 285 when (1) the litigation is objectively baseless, *i.e.*, "such that no reasonable litigant could reasonably expect success on the merits" and (2) the patentee brought the suit in subjective bad faith, *i.e.* the "lack of objective foundation for the claim was either known or so obvious that it should have been known by the party asserting the claim." *Highmark*, 687 F.3d at 1309 (internal quotation marks omitted). The BPLA recognizes that this Court is currently reviewing this test in the pending appeal of *Octane Fitness, LLC v. Icon Health & Fitness, Inc.*, No. 12-1184 (oral argument scheduled for Feb. 26, 2014). Nevertheless, to the extent an attorneys' fee award under Section 285 requires an assessment of the objective basis for asserting or defending against a suit—and the BPLA believes that this is an important component of any exceptionality determination under Section 285 when a party's position taken during litigation is at issue—this assessment should be reviewed *de novo* by the Federal Circuit.

The BPLA supports this *de novo* review for this reason: exceptionality requires perspective. After all, not every case in which a party takes a questionable position is or should be exceptional. The statute requires that a case be exceptional, not common. The legislative history of Section 285 reveals that Congress did "not contemplate[] that the recovery of attorney's fees [would] become an ordinary thing in patent suits." *Park-In-Theatres, Inc. v. Perkins*, 190 F.2d 137, 142 (9th Cir. 1951) (quoting 1946 U.S. Code Cong. Serv. 1386, 1387) (discussing the predecessor statute to Section 285). Perspective, in turn, requires that a given case be compared with a standard based on the accumulation of multiple data points over time—the kind of accumulated wisdom that comes from appellate precedent.

Sitting on appeal, and with the benefit of having reviewed thousands of patent cases over the years, the Federal Circuit can provide the perspective that a district court may not always have. For example, a novel or aggressive argument for a particular claim construction or patent infringement theory may appear unreasonable to a district court that sees one or two patent cases every few years. That same argument, however, when viewed in the context of the collected body of Federal Circuit patent law decisions since that court's inception in 1982, may actually have merit. It would be contrary to the purpose of Section 285—and manifestly unjust—to sanction a party for asserting a claim or defense that has merit, but where that merit is simply not appreciated by the district court. That is not to say that a decision on whether a case is exceptional should be taken from the district court. Rather, the Federal Circuit should be allowed to review a district court's objective assessment of the losing party's

position *de novo* because it is better situated than any given district court to weigh whether the case is unusual, and hence exceptional, in the context of other patent cases.

More specifically, issues that arise in patent litigation are both factually and legally complex and often counterintuitive. Sometimes, the technology at issue can be daunting and thus cloud the legal issues. Patent litigation is not for the faint of heart. The Federal Circuit, however, was created for the express purpose of overseeing patent cases and hence acquiring the expertise needed to oversee patent law. *See Markman v. Westview Instruments, Inc.*, 517 U.S. 370, 390 (1996) ("Congress created the Court of Appeals for the Federal Circuit as an exclusive appellate court for patent cases.") (citing H.R. Rep. No. 97-312, pp. 20-23 (1981)); *see also* 28 U.S.C. § 1295(a).

Federal Circuit decisions on *de novo* review of objective baselessness findings will, in the aggregate, have significant precedential value. Although the facts in each case will be different, over time, the collected body of decisions regarding whether *any* reasonable litigant could reasonably expect success on the merits in a wide variety of circumstances will prove highly instructive. In effect, these decisions will define the minimum acceptable standards for asserting patent infringement suits in the United States, and minimum standards for defending against such suits, creating an institutional benchmark on which future litigants and district courts alike can rely.

Litigants will benefit enormously from this collective body of law. All attorneys have the duty to zealously represent their clients. While it is clear that there is a line between zealous advocacy and frivolous litigation,

that line is not well-defined. Federal Circuit decisions on objective baselessness under the former abuse-of-discretion standard necessarily lacked consistency and made exceptionality findings less predictable.

Further, the deterrent effects of Section 285 are enhanced by *de novo* review of the objective baselessness test. After all, how can Section 285 act as an effective deterrent to meritless litigation when it is applied inconsistently, based on the particular district court judge's limited experiences with patent trials or his or her subjective impressions of the parties and attorneys? What is the deterrent value of Section 285 if parties *do not know* what constitutes a frivolous suit? Without an objective assessment of the merits, it would be difficult for any court to decide whether a given claim or defense strayed outside the acceptable boundaries of patent law, rendering the case exceptional. For example, absent misconduct, a patentee should not be sanctioned merely because it brought and maintained a patent infringement suit that was ultimately unsuccessful. *See Brooks Furniture*, 393 F.3d at 1384 ("Bringing an infringement action does not become unreasonable in terms of '285 if the infringement can reasonably be disputed. Infringement is often difficult to determine, and a patentee's ultimately incorrect view of how a court will find does not of itself establish bad faith.").[3] In other words, an objective test, and *de novo*

3. Although currently a prevailing accused infringer seeking fees must, absent a showing of misconduct by the patentee, prove both objective baselessness and subjective bad faith, the Federal Circuit recently held that "[o]bjective baselessness alone can create a sufficient inference of bad faith to establish exceptionality under § 285, unless the circumstances as a whole show a lack of recklessness on the patentee's part." *Kilopass Tech., Inc. v. Sidense Corp.*, 738 F.3d 1302, 1314 (Fed. Cir. 2013).

review of it, will prevent district courts from confusing an attorney's or litigant's demeanor with exceptionality.

Similarly, district courts would also benefit greatly from access to a consistent body of law on what constitutes an objectively baseless suit. For example, any given district court judge may try or even see only a handful of patent cases. As such, individual district court judges may be hard pressed to determine, on their own and based solely on their own limited experience with patent litigation, whether the suit is such that *no* reasonable litigant could have had a reasonable expectation of success. Access to the Federal Circuit's *de novo* review of objective baselessness determinations will improve the reliability and consistency of district court exceptionality determinations.

The BPLA notes that the key to the precedential value of these decisions is that district courts decide questions of objective baselessness consistently. The enormous precedential value of this body of law is diminished or non-existent where the objective test is allocated to a judge's discretion and reviewed with deference, rather than on an objective assessment of the merits reviewed *de novo*.

II. EXPERIENCE WITH PATENT LAW, NOT PERSONAL OBSERVATION OF THE LITIGANTS, IS RELEVANT TO AN OBJECTIVE ASSESSMENT OF THE MERITS

A. District Court's Opportunity to Observe the Witnesses and Parties During Litigation Plays No Role in the Objective Baselessness Inquiry

The Petitioner and several *amici* incorrectly assume that because a district court judge has the opportunity to make personal observations and impressions during the course of a litigation, he or she is uniquely positioned to answer the objective baselessness question. *See e.g.*, AIPLA Br. 17 ("Because the trial judge has presided over the case . . . she will have vast, hands-on knowledge that will never appear in the appellate record, including evaluations of the credibility of the attorneys and witnesses and knowledge of how the proceedings unfolded"); *see also* Pet. Br. 18; U.S. Br. 25-26.[4]

---

4. Frivolous litigation should not be confused with litigation misconduct. The test for exceptionality on the basis of a frivolous suit—the test at issue before the Court—is applied when litigation misconduct is not at issue. *See Brooks Furniture*, 393 F.3d at 1381. Litigation misconduct may, alone, make a case exceptional, even without findings of subjective bad faith and objective baselessness. *See, e.g., Monolithic Power Sys., Inc. v. O2 Micro Int'l Ltd.*, 726 F.3d 1359, 1366 (Fed. Cir. 2013). The BPLA does not contend that a district court's finding of exceptionality on the basis of litigation misconduct should be reviewed *de novo*; as the Federal Circuit has noted, it "ill behooves an appellate court to overrule a trial judge concerning litigation misconduct when the litigation occurred in front of the trial judge, not the appellate court." *Id.* at 1367-68 (quoting *Nilssen v. Osram Sylvania, Inc.*, 528 F.3d 1352, 1359 (Fed. Cir. 2008)). But that is not the issue here. The only issue here is whether the objective baselessness prong should be reviewed *de novo*.

These arguments ignore the basic premise of the objective test, which is that *absent misconduct*, an alleged infringer must show that the suit is objectively baseless in order for the case to be exceptional. The relevant question in the objective test is whether any reasonable litigant could have reasonably expected success on the merits; evidence of the actual litigant's subjective state of mind—including the behavior of the witnesses, parties, or attorneys during the litigation—is irrelevant to the objective test. *See Highmark*, 687 F.3d at 1308-09 ("The requirement that the litigation be objectively baseless 'does not depend on the state of mind of the [party] at the time the action was commenced, but rather requires an objective assessment of the merits.'") (quoting *Brooks Furniture*, 393 F.3d at 1382). Thus the district court's personal observations of the witnesses, parties, and attorneys cannot contribute to the determination of whether the claim is objectively baseless.

Given that the district court judge's own impressions formed during the litigation are not relevant to the objective test, there is no rationale for presuming that a district court's determination merits deference. On the contrary, in light of the critical need for uniformity and predictability in decisions on the objective basis for asserting a patent claim, *de novo* review is required because there is no other way to ensure that decisions by individual district courts, many with relatively little or inconsistent experience in patent law, will be consistent and reliable. There is no neat, bright line rule upon which district courts can rely defining what is and what is not objectively baseless. Rather, the objective test requires district courts to assess each case on its objective merits. Without guidance from the Federal Circuit, what is

objectively baseless in the eyes of one district court judge, who may see only one patent case every few years, could have merit in the eyes of another district court judge, who has extensive experience trying patent cases. Giving district courts discretion in determining objective baselessness necessarily produces a wide variation in results. Such inconsistency can lead to forum shopping and, ultimately, the inequitable administration of the patent laws.

Further, *de novo* review of objective baselessness determinations is consistent with the statute. The plain meaning of Section 285 gives the district court discretion to award fees only if the case is exceptional, not the discretion to determine whether the case is exceptional in the first place. 35 U.S.C. § 285 ("The court *in exceptional cases* may award reasonable attorney fees to the prevailing party.") (emphasis added). That is, the discretion implicit in "may" applies to the verb "award," and not to a determination of exceptionality *per se*. Only after a case is found to be exceptional does the court have discretion to award attorneys' fees. *Sun-Tek Indus., Inc. v. Kennedy Sky Lites, Inc.*, 929 F.2d 676, 678 (Fed. Cir. 1991) ("Once an exceptional case is found, the court *then* has discretion to determine whether or not reasonable attorney fees should be granted.") (emphasis in original); *Bayer Aktiengesellschaft v. Duphar Int'l Research B.V.*, 738 F.2d 1237, 1242 (Fed. Cir. 1984) ("Although the award of [attorneys'] fees is discretionary with the court, such discretion, nonetheless, may only be exercised upon a specific finding of exceptional circumstances.") Thus, *de novo* review of the objective test does not rob the district courts of any discretion granted by the statute.

Of course, *de novo* review of objective baselessness determinations does not deprive the district court of input on a decision to award fees under Section 285. Indeed, even under the current *de novo* standard of review of the objective test, district courts retain significant discretion in Section 285 attorneys' fees cases. The objective test is simply a safeguard to make sure fee awards for frivolous suits under Section 285 are granted only in exceptional cases. Once a case is found to be exceptional, it is undisputed that the district court has discretion in determining the ultimate issues under Section 285: whether to award attorneys fees and, if so, in what amount. *See Highmark, Inc. v. Allcare Health Mgmt. Sys., Inc.*, 701 F.3d 1351, 1353 (Fed. Cir. 2012) (Dyk, J., concurring) ("We all agree that the ultimate decision to award enhanced damages and attorneys' fees (once the predicate tests have been satisfied) is committed to the district court's discretion.")

B. The Federal Circuit Is Uniquely Positioned to Make Objective Baselessness Determinations

No matter whether objective baselessness is ultimately called a question of law or fact, or a combination of the two, the Federal Circuit is best positioned, via *de novo* review, to create a data set distinguishing between legal arguments that are aggressive, but have merit, and those that are meritless. As this Court has recognized,

> [a]t least in those instances in which Congress has not spoken and in which the issue falls somewhere between a pristine legal standard and a simple historical fact, the fact/law distinction at times has turned on a

> determination that, as a matter of the sound administration of justice, one judicial actor is better positioned than another to decide the issue in question.

Miller v. Fenton, 474 U.S. 104, 114 (1985) (finding voluntariness of a confession is an issue of law, meriting independent consideration in a federal *habeas corpus* proceeding, not a finding of fact of the state court that "shall be presumed to be correct" under statute); *see also Markman*, 517 U.S. at 388 (in light of "functional considerations," "judges, not juries, are the better suited to find the acquired meaning of patent terms"); *Salve Regina Coll. v. Russell*, 499 U.S. 225, 234 (1991) (in diversity actions, deference to district court's determinations of state law is inconsistent with the goals of the *Erie* doctrine, "discouragement of forum-shopping and avoidance of inequitable administration of the laws.")

As this Court has recognized, the Federal Circuit has "special expertise" in patent law. *See Warner-Jenkinson Co., Inc. v. Hilton Davis Chem. Co.*, 520 U.S. 17, 20 (1997). It is undisputed that the breadth of the Federal Circuit's experience in patent law is unrivaled by any other court. Whereas a particular district court judge may try patent cases only on occasion, the Federal Circuit reviews hundreds of patent infringement cases every year. *See* United States Court of Appeals for the Federal Circuit Statistics, Filings of Patent Infringement Appeals from the U.S. District Courts, *at* http://www.cafc.uscourts.gov/the-court/statistics.html (over four thousand patent infringement appeals from district courts were filed in FY 2004 through FY 2013). On top of that, the Federal Circuit also reviews numerous appeals from the United States

Patent & Trademark Office, such as denials of patent applications and decisions in reexamination proceedings. *See* United States Court of Appeals for the Federal Circuit Statistics, Appeals Filed, Terminated, and Pending, *at* http://www.cafc.uscourts.gov/the-court/statistics.html (over nine hundred appeals to the Federal Circuit from the United States Patent & Trademark Office were filed from October 2003 to September 2013). Together, patent appeals have constituted between 28% and 45% of the Federal Circuit's caseload each year from 2006 to 2013. *See* United States Court of Appeals for the Federal Circuit Statistics, Appeals Filed, by Category, *at* http://www.cafc.uscourts.gov/the-court/statistics.html.

Further, the Federal Circuit is uniquely positioned to ensure that the objective test is decided consistently and on an objective assessment of the merits. This Court has recognized that appellate courts "are structurally suited to the collaborative juridical process that promotes decision accuracy." *Salve Regina*, 499 U.S. at 232. A claim that is objectively baseless is objectively baseless irrespective of the district in which the claim is brought and irrespective of the identity and nature of the party asserting the claim. Patent law, unlike most areas of law, is not subject to split decisions among the Circuit Courts. Except on the few occasions in which this Court reviews patent cases, the Federal Circuit is the exclusive last word on the interpretation of the patent laws. *See* 28 U.S.C. § 1295(a). As such, the Federal Circuit has the ability to ensure that the objective test is applied consistently. Indeed:

> [i]t was just for the sake of such desirable uniformity that Congress created the Court of

> Appeals for the Federal Circuit as an exclusive appellate court for patent cases . . . observing that increased uniformity would "strengthen the United States patent system in such a way as to foster technological growth and industrial innovation."

Markman, 517 U.S. at 390 (quoting H.R. Rep. No. 97-312, pp. 20-23 (1981)). Uniformity in this fundamental issue of patent law—defining the minimum acceptable basis for bringing a patent infringement claim—would strengthen the United States patent system, deterring frivolous litigation but not discouraging legitimate, if groundbreaking or novel, arguments.

III. *DE NOVO* REVIEW HAS NOTHING TO DO WITH PATENT TROLLS

The Petitioner and several *amici* have attempted to frame Section 285 as a tool for controlling and punishing patent assertion entities. *See, e.g.*, Pet. Br. 44-50; Apple Br. 9-21. This case, however, is not a referendum on patent trolls. Section 285 was never intended to be—and should not be used as—a means to punish patent assertion entities merely for being patent trolls. Rather, Section 285 can be, and has been, applied to both plaintiffs and defendants regardless of their identity.

Over time, cases have been found exceptional based on conduct of, and positions taken by, both plaintiffs/patent owners *and* by defendants/accused infringers. *See e.g., Monolithic Power*, 726 F.3d at 1366-69 (affirming finding of exceptionality and award of attorneys' fees to accused infringer on the basis of patentee's litigation

misconduct); *Taurus IP, LLC v. DaimlerChrysler Corp.*, 726 F.3d 1306, 1327-30 (Fed. Cir. 2013) (affirming finding of exceptionality and award of attorneys' fees to accused infringer where patentee's proposed claim construction was objectively baseless); *Powell v. Home Depot U.S.A., Inc.*, 663 F.3d 1221, 1241 (Fed. Cir. 2011) (affirming district court's finding of exceptionality and award of attorneys' fees to patentee in light of accused infringer's "litigation misconduct and vexatious and bad faith litigation."); *Amsted Indus. Inc. v. Buckeye Steel Castings Co.*, 24 F.3d 178, 184 (Fed. Cir. 1994) ("An express finding of willful infringement is a sufficient basis for classifying a case as 'exceptional'."). That is, the exceptional case standard is agnostic as to the identity of the prevailing or losing party and was intended to discourage bad conduct by either party in a patent case. *See* S. Rep. No. 79-1503 (1946), *reprinted in* 1946 U.S. Code Cong. Serv. 1386, 1387 (it was intended that the predecessor statute to Section 285, "will discourage infringement of a patent by anyone thinking that all he would be required to pay if he loses the suit would be a royalty" *and* "[t]he provision is also made general so as to enable the court to prevent a gross injustice to an alleged infringer."); *see also Automated Bus. Cos., Inc. v. NEC America, Inc.*, 202 F.3d 1353, 1355 (Fed. Cir. 2000) ("The purpose of this statute has been described by [the Federal Circuit] as 'to compensate the prevailing party for its monetary outlays in the prosecution or defense of the suit.'") Indeed, the statutory wording does not single out one side or the other. The statute says that fees may be awarded to the "prevailing party," not solely to, for example, an aggrieved defendant who faced off against a patent troll. As such, because Section 285 discourages bad conduct on either side of the "v," an argument that *de novo* review somehow lessens the ability of the courts to control patent trolls is beside the point.

Section 285 was intended, in part, "to enable the court to prevent a gross injustice to the alleged infringer." *See* S. Rep. No. 79-1503 (1946), *reprinted in* 1946 U.S. Code Cong. Serv. 1386, 1387. As the Federal Circuit recently noted, in light of the legislative history and Federal Circuit case law, "it is clear that the aim of § 285 is to compensate a defendant for attorneys' fees it should not have been forced to incur. The aim is not to punish a plaintiff for bringing those claims." *Kilopass*, 738 F.3d at 1313. Thus, it is the harm to the prevailing party that makes the case exceptional, not the identity of the losing party. While of course patent assertion entities may bring suits that are "exceptional" under Section 285, *see e.g.*, *Taurus IP*, 726 F.3d at 1327-30 (affirming district court's finding of exceptionality and Section 285 award against patent assertion entity on the grounds that patentee's claim construction was objectively baseless), a case is not made exceptional simply because the suit is brought by a patent assertion entity.

Finally, the BPLA notes that Congress has the power to enact legislation to control patent trolls and, in fact, is currently debating just such measures, such as the Innovation Act, H.R. 3309, and the Patent Transparency and Improvements Act of 2013, S. 1720. Section 285, on the other hand, was never intended to be—and should not be employed as—a weapon to punish patent trolls merely for being patent trolls.

CONCLUSION

The BPLA supports the creation of a consistent body of law defining what is objectively baseless patent litigation in the United States. Such precedent, decided consistently by the district courts and reviewed *do novo* by the Federal Circuit, would not discourage parties from bringing legitimate, if difficult, arguments and would deter frivolous litigation. For the reasons set forth above, the BPLA respectfully submits that this Court should hold that a district court's exceptional case finding under 35 U.S.C. § 285 based on its judgment that a suit is objectively baseless is not entitled to deference and should be reviewed *de novo* by the Federal Circuit.

Respectfully Submitted,

ERIK PAUL BELT
Counsel of Record
VICE PRESIDENT, BOSTON PATENT LAW ASSOCIATION
WYLEY SAYRE PROCTOR
MCCARTER & ENGLISH, LLP
265 Franklin Street
Boston, MA 02110
(617) 449-6500
ebelt@mccarter.com

Counsel for Amicus Curiae Boston Patent Law Association

January 24, 2014

AMICUS CURIAE BRIEF

No. 12-1163

In the Supreme Court of the United States

HIGHMARK INC.,

Petitioner,

v.

ALLCARE HEALTH MANAGEMENT SYSTEMS, INC.,

Respondent.

On Writ of Certiorari to the United States Court of Appeals for the Federal Circuit

BRIEF OF BSA | THE SOFTWARE ALLIANCE AS *AMICUS CURIAE* IN SUPPORT OF RESPONDENT

ANDREW J. PINCUS
Counsel of Record
PAUL W. HUGHES
JAMES F. TIERNEY
Mayer Brown LLP
1999 K Street, NW
Washington, DC 20006
(202) 263-3000
apincus@mayerbrown.com

Counsel for Amicus Curiae

TABLE OF CONTENTS

Table of Authorities ii
Interest of the *Amicus Curiae* 1
Summary of Argument 2
Argument 3
I. Because Of Patent Litigation's Particular Characteristics, Close Appellate Review Of Decisions Whether To Shift Fees Under Section 285 Best Effectuates The Patent Act's Purposes. 3
A. Patent Litigation Costs Are Enormous. 4
B. The Permissive Venue Rule For Patent Actions Enables Forum-Shopping. 6
II. A District Court's Determination Whether Fees Should Be Shifted Under Section 285 Is Subject To *De Novo* Review. 10
A. "Objective Unreasonableness" Is A Legal Determination Subject To *De Novo* Review. 12
1. The statutory text. 12
2. The inherently legal nature of the inquiry. 13
3. This Court's decisions on similar questions. 17
B. Petitioner's Reliance On *Cooter* And *Pierce* Is Misplaced. 18
III. Whatever The Court Decides With Respect To Section 285, The *De Novo* Standard Applies To Objective Reasonableness Determinations Relating To Willful Infringement. 20
Conclusion 24

TABLE OF AUTHORITIES

Cases

In re Acer Am. Corp.,
626 F.3d 1252 (Fed. Cir. 2010) 7

In re Apple Inc.,
374 F. App'x 997 (Fed. Cir. 2010) 7

In re Apple Inc.,
456 F. App'x 907 (Fed. Cir. 2012) 7

Aro Mfg. Co. v. *Convertible Top Replacement Co.*,
377 U.S. 476 (1964) 21

AT&T Mobility LLC v. *Concepcion*,
131 S. Ct. 1740 (2011) 10

Auto. Techs. Int'l, Inc. v. *Siemens VDO Auto. Corp.*,
744 F. Supp. 2d 646 (E.D. Mich. 2010) 15

Bard Peripheral Vascular, Inc. v. *W.L. Gore & Assocs., Inc.*,
670 F.3d 1171 (Fed. Cir. 2012) 5, 23

Bard Peripheral Vascular, Inc. v. *W.L. Gore & Assocs., Inc.*,
682 F.3d 1003 (Fed. Cir. 2012) 21, 22

Bonito Boats, Inc. v. *Thunder Craft Boats, Inc.*,
489 U.S. 141 (1989) 3

Brasseler, U.S.A. I, L.P. v. *Stryker Sales Corp.*,
267 F.3d 1370 (Fed. Cir. 2001) 15

Bristol-Myers Squibb Co. v. *Rhone-Poulenc Rorer, Inc.*,
2002 WL 1733681 (S.D.N.Y. 2002) 5

TABLE OF AUTHORITIES—continued

Cooper Indus., Inc. v. *Leatherman Tool Grp., Inc.*, 532 U.S. 424 (2001) 23

Cooter & Gell v. *Hartmarx Corp.*, 496 U.S. 384 (1990) 3, 18, 20, 22

Dick v. *New York Life Ins. Co.*, 359 U.S. 437 (1959) 16

In re Echostar Corp, 388 F. App'x 994 (Fed. Cir. 2010) 7

Eon-Net LP v. *Flagstar Bancorp*, 653 F.3d 1314 (Fed. Cir. 2011) 14

First Options of Chicago, Inc. v. *Kaplan*, 514 U.S. 938 (1995) 10

In re Hoffmann-La Roche Inc., 587 F.3d 1333 (Fed. Cir. 2009) 7

Icicle Seafoods, Inc. v. *Worthington*, 475 U.S. 709 (1986) 11

Lilly v. *Virginia*, 527 U.S. 116 (1999) 13

MarcTec, LLC v. *Johnson & Johnson*, 664 F.3d 907 (Fed. Cir. 2012) 14

Markman v. *Westview Instruments, Inc.*, 517 U.S. 370 (1996) 8

Miller v. *Fenton*, 474 U.S. 104 (1985) 13

Mobile Shelter Sys. USA, Inc. v. *Grate Pallet Solutions, LLC*, 2013 WL 3815595 (M.D. Fla. 2013) 14

TABLE OF AUTHORITIES—continued

Monsanto Co. v. *Bayer Cropscience, N.V.*,
2007 WL 1098504 (E.D. Mo. 2007) 5

Ornelas v. *United States*,
517 U.S. 690 (1996) 16, 17, 18

Pierce v. *Underwood*,
487 U.S. 552 (1988) ..... *passim*

Professional Real Estate Investors, Inc. v.
Columbia Pictures Industries, Inc.,
508 U.S. 49 (1993) 17

Pullman-Standard v. *Swint*,
456 U.S. 273 (1982) 11

Qualcomm Inc. v. *Broadcom Corp.*,
2007 WL 4351017 (S.D. Cal. 2007) 5

Salve Regina Coll. v. *Russell*,
499 U.S. 225 (1991) 15, 16

In re Seagate Tech., LLC,
497 F.3d 1360 (Fed. Cir. 2007) 21, 23

In re Simpson Strong-Tie Co.,
417 F. App'x 941 (Fed. Cir. 2011) 7

Sparks v. *Eastman Kodak Co.*,
49 F. App'x 900 (Fed. Cir. 2002) 14

Takeda Chem. Indus., Ltd. v.
Mylan Labs., Inc.,
549 F.3d 1381 (Fed. Cir. 2008) 5

Taltech Enters. Ltd. v. *Esquel Ltd.*,
609 F. Supp. 2d 1195 (W.D. Wash. 2009) 5

In re TS Tech USA Corp.,
551 F.3d 1315 (Fed. Cir. 2008) 7

TABLE OF AUTHORITIES—continued

Univ. of Pittsburgh of Com. Sys. of Higher Educ. v. *Varian Med. Sys., Inc.*, 2012 WL 1436569 (W.D. Pa. 2012) 15

In re Vistaprint Ltd., 628 F.3d 1342 (Fed. Cir. 2010) 7

Statutes

28 U.S.C. § 1400(b) 6

35 U.S.C. § 284 21

35 U.S.C. § 285 ..... *passim*

Act of August 1, 1946, ch. 726, § 1, 60 Stat. 778 12

Other Authorities

Marie Gryphon, *Assessing the Effects of a "Loser Pays" Rule on the American Legal System*, 8 Rutgers J.L. & Pub. Pol'y 567, 581 (2011) 5

Mark A. Lemley, *Where to File Your Patent Case*, 38 AIPLA Q.J. 401 (2010) 7

Teresa Lii, *Shopping for Reversals: How Accuracy Differs Across Patent Litigation Forums*, 12 Chi.-Kent J. Intell. Prop. 31 (2013) 9

Kimberly A. Moore, *Forum Shopping in Patent Cases: Does Geographic Choice Affect Innovation?*, 79 N.C. L. Rev. 889 (2001) 6, 8

TABLE OF AUTHORITIES—continued

PricewaterhouseCoopers, *2013 Patent Litigation Study: Big cases make headlines, while patent cases proliferate* (2013) 7

David Rosenberg & Steven Shavell, *A Model in Which Suits Are Brought For Their Nuisance Value*, 5 Int'l Rev. L. & Econ. 3 (1985) 5, 6

Christopher B. Seaman, *Willful Patent Infringement and Enhanced Damages After* In re Segate, 97 Iowa L. Rev. 417 (2012) 5, 8, 23

BRIEF OF BSA | THE SOFTWARE ALLIANCE AS *AMICUS CURIAE* IN SUPPORT OF PETITIONER

INTEREST OF THE *AMICUS CURIAE*

BSA | The Software Alliance is an association of the world's leading software and hardware technology companies. On behalf of its members, BSA promotes policies that foster innovation, growth, and a competitive marketplace for commercial software and related technologies. BSA members pursue patent protection for their intellectual property and as a group hold a large number of patents. They also create products that are frequently subject to unjustified patent infringement claims. Because patent policy is vitally important to promoting the innovation that has kept the United States at the forefront of software and hardware development, BSA members have a strong stake in the proper functioning of the U.S. patent system.[1]

The members of the BSA include Adobe, Apple, Autodesk, AVEVA, AVG, Bentley Systems, CA Technologies, CNC/Mastercam, Dell, IBM, Intel, McAfee, Microsoft, Minitab, Oracle, Parametric Technology Corporation, Progress Software, Quest Software, Rosetta Stone, Siemens PLM, Symantec, TechSmith, and The MathWorks.

---

[1] Pursuant to Rule 37.6, *amicus* affirms that no counsel for a party authored this brief in whole or in part and that no person other than *amicus* and its counsel made a monetary contribution to its preparation or submission. The parties' letters consenting to the filing of this brief have been filed with the Clerk's office.

SUMMARY OF ARGUMENT

Section 285 of the Patent Act permits a prevailing party to recover fees in "exceptional" cases. 35 U.S.C. § 285. As BSA explained in its *amicus* brief in *Octane Fitness, LLC* v. *Icon Health & Fitness, Inc.*, a case is "exceptional" if a party—plaintiff or defendant—maintained an objectively unreasonable position. See Br. of BSA | The Software Alliance as *Amicus Curiae* in Supp. of Pet'r, *Octane Fitness LLC* v. *Icon Health & Fitness, Inc.*, No. 12-1184.[2]

A district court's decision to shift fees under an "objectively unreasonable" standard should be subject to *de novo* review on appeal (any underlying factual findings would of course be reviewed under a deferential standard). If, contrary to our submission in *Octane*, the Court concludes that fee-shifting turns on a different standard, any subsidiary legal determinations (including the objective unreasonableness determination) should be reviewed *de novo*.

Attorneys' fees in patent infringement cases have grown substantially in recent years and the threat of large costs fuels both abusive claims and abusive defenses. The availability of fee-shifting in appropriate cases discourages abuse, because it gives victimized parties an incentive to fight abusive claims. *De novo* review of a district court's decision is critical, because it permits the Federal Circuit to assure uniform application of the fee-shifting statute.

Moreover, the broad discretion that patent-infringement plaintiffs have in choosing where to sue creates a significant risk of forum shopping. A *de no-*

---

[2] We have served a copy of BSA's *Octane amicus* brief on the parties in this case.

vo standard of review eliminates any advantage that a party might hope to gain by suing in what it perceives to be a plaintiff-friendly forum.

Applying the *de novo* standard to objective unreasonableness determinations accords with the text of Section 285, with the inherently legal nature of the inquiry, and with the approach the Court has taken in analogous circumstances. The two decisions on which petitioner relies—*Pierce* v. *Underwood*, 487 U.S. 552 (1988), and *Cooter & Gell* v. *Hartmarx Corp.*, 496 U.S. 384, 402 (1990)—are plainly distinguishable given the absence in those statutes of the express congressional rejection of deference that is present with respect to Section 285 as well as other significant differences in the statutory contexts.

ARGUMENT

I. Because Of Patent Litigation's Particular Characteristics, Close Appellate Review Of Decisions Whether To Shift Fees Under Section 285 Best Effectuates The Patent Act's Purposes.

The Patent Act is designed to promote innovation, which it accomplishes by balancing the rights of patent holders with the interests of competitors in the marketplace. "From their inception, the federal patent laws have embodied a careful balance between the need to promote innovation and the recognition that imitation and refinement through imitation are both necessary to invention itself and the very lifeblood of a competitive economy." *Bonito Boats, Inc.* v. *Thunder Craft Boats, Inc.*, 489 U.S. 141, 146 (1989).

BSA's *amicus* brief in *Octane* explained how Section 285, by deterring abusive litigation, plays a crit-

ical role in achieving the balance necessary to fulfill the purposes of the Patent Act. Fee-shifting remedies asymmetries in litigation: It motivates a defendant to abandon the defense of a losing case, and it likewise deters a plaintiff from pursuing a meritless claim. In both situations, a showing that a losing litigant maintained an objectively unreasonable position is a sufficient basis to award fees. See BSA *Octane* Br. 8-10.

Two characteristics of patent litigation favor searching appellate review of a district court's decision to shift fees: *first*, the large amount of fees typically at stake in these lawsuits; and, *second*, the extremely broad venue provision applicable to patent infringement actions that gives a plaintiff suing a business that operates nationally the option of filing its lawsuit in virtually any judicial district in the nation.

A. Patent Litigation Costs Are Enormous.

Patent lawsuits are enormously expensive, and the costs are growing. At present, a median-sized patent litigation costs $6 million in fees, per party—a cost which has *quadrupled* over the past ten years. Am. Intellectual Prop. Law Ass'n, Report of the Economic Survey 2011, at I-155 to I-156 (July 2011).

Fee awards under Section 285 reflect the growing costs of patent infringement suits. As just a few examples, over the past few years, courts have issued fee awards for $26.9 million, $19 million, $16.8 million, $8.6 million, $8.4 million, and $6.8 million.[3] In

---

[3] Respectively: *Bristol-Myers Squibb Co.* v. *Rhone-Poulenc Rorer, Inc.*, 2002 WL 1733681, at *16 (S.D.N.Y. 2002); *Bard Peripheral Vascular, Inc.* v. *W.L. Gore & Assocs.*, 670 F.3d

fact, "[i]n some cases, the attorney's fees awarded under [Section] 285 can be equal to, or greater than, the amount of compensatory damages." Christopher B. Seaman, *Willful Patent Infringement and Enhanced Damages After* In re Segate, 97 Iowa L. Rev. 417, 422 (2012).

These massive litigation costs can be a significant factor fueling abusive litigation tactics. Absent fee-shifting, *whenever* the cost to a plaintiff of filing a suit (*i.e.*, the filing fee and cost of the plaintiff's lawyer) is less than the cost to defend the suit, it is in an opportunistic plaintiff's interest to sue *regardless* of the merits of the claim. See David Rosenberg & Steven Shavell, *A Model in Which Suits Are Brought For Their Nuisance Value*, 5 Int'l Rev. L. & Econ. 3, 4 (1985). In these circumstances, an economically rational defendant—even one who believes that a claim is wholly meritless—will far too regularly settle a suit for the cost to defend. *Ibid.*

Fee-shifting in appropriate cases addresses this current disequilibrium in plaintiff incentives versus defendant costs by requiring a litigant to internalize the costs of unjustified litigation. See Marie Gryphon, *Assessing the Effects of a "Loser Pays" Rule on the American Legal System*, 8 Rutgers J.L. & Pub. Pol'y 567, 581 (2011); Rosenberg & Shavell, 5 Int'l Rev. L. & Econ. at 5.

1171, 1178 (Fed. Cir. 2012); *Takeda Chem. Indus., Ltd.* v. *Mylan Labs., Inc.*, 549 F.3d 1381, 1391 (Fed. Cir. 2008); *Qualcomm Inc.* v. *Broadcom Corp.*, 2007 WL 4351017, at *1 (S.D. Cal. 2007); *Monsanto Co.* v. *Bayer Cropscience, N.V.*, 2007 WL 1098504, at *10 (E.D. Mo. 2007), aff'd, 275 Fed. App'x 992 (Fed. Cir. 2008); *Taltech Enters. Ltd.* v. *Esquel Ltd.*, 609 F. Supp. 2d 1195, 1211 (W.D. Wash. 2009), aff'd in relevant part, rev'd in part, 604 F.3d 1324 (Fed. Cir. 2010).

On the other hand, a party with a legitimate claim or defense should not be coerced into settling for fear that it will erroneously be subjected to fee shifting. Close appellate review of Section 285 fee-shifting determinations is important to the proper functioning of the patent litigation system.

B. The Permissive Venue Rule For Patent Actions Enables Forum-Shopping.

Plaintiffs in patent infringement actions have extremely broad discretion in choosing the forum where they file suit, which creates a significant potential for forum shopping. A deferential standard of review rewards forum shopping by insulating a district court's decision from searching review; a *de novo* standard, by contrast, reduces any benefit that a party might hope to obtain by steering litigation to particular courts.

The venue provision governing patent infringement actions provides that a civil action may be brought in the judicial district "where the defendant has committed acts of infringement and has a regular and established place of business." 28 U.S.C. § 1400(b).

As a result of "liberalizations of the jurisdiction and venue statutes, combined with the technological feasibility and ease of national commerce," any company with a nationwide market for its products may potentially "be sued in virtually any U.S. district court." Kimberly A. Moore, *Forum Shopping in Patent Cases: Does Geographic Choice Affect Innovation?*, 79 N.C. L. Rev. 889, 897 (2001). When the defendant is such a national business, the plaintiff of-

ten has unfettered choice in deciding where in the country it will sue.[4]

Patent cases are distributed unevenly around the country. More than 20% of all cases filed in 2012 were instituted in the Eastern District of Texas and more than 15% were filed in the District of Delaware. Judicial Business of the United States Courts, 2012 Annual Report, Appendix, Table C-7, http://tinyurl.-com/lfxll33.

A number of studies of patent litigation have found that "the jurisdiction in which a case is litigated has a significant impact on its outcome." Mark A. Lemley, *Where to File Your Patent Case*, 38 AIPLA Q.J. 401, 410-411 (2010). See also *id.* at 410 ("The variation in win rates ranges from a high of 55% in the Northern District of Texas to a low of 11.5% in the Northern District of Georgia."); PricewaterhouseCoopers, *2013 Patent Litigation Study: Big cases make headlines, while patent cases proliferate* 23 (2013), http://tinyurl.com/lsnjawf (national success rate for plaintiffs between 1995 and 2012 of 32.4%;

---

[4] The Federal Circuit has properly issued mandamus to compel magnet jurisdictions to transfer venue in particularly egregious instances of venue shopping. See, *e.g.*, *In re Acer Am. Corp.*, 626 F.3d 1252 (Fed. Cir. 2010) (granting mandamus to transfer case out of the Eastern District of Texas); *In re Hoffmann-La Roche Inc.*, 587 F.3d 1333 (Fed. Cir. 2009) (same); *In re TS Tech USA Corp.*, 551 F.3d 1315 (Fed. Cir. 2008) (same). But many mandamus petitions are denied. See, *e.g.*, *In re Apple Inc.*, 456 F. App'x 907 (Fed. Cir. 2012) (denying mandamus petition seeking transfer out of the Eastern District of Texas); *In re Simpson Strong-Tie Co.*, 417 F. App'x 941 (Fed. Cir. 2011) (same); *In re Vistaprint Ltd.*, 628 F.3d 1342 (Fed. Cir. 2010) (same); *In re Echostar Corp*, 388 F. App'x 994 (Fed. Cir. 2010) (same); *In re Apple Inc.*, 374 F. App'x 997 (Fed. Cir. 2010) (same).

comparable rate in Eastern District of Texas was 57.5% and in the District of Delaware was 42.2%).

This sort of forum shopping is not, of course, entirely one sided. If a patent holder sends a demand letter accusing an entity of infringement, the letter's recipient may file an action seeking a declaratory judgment of patent invalidity or non-infringement. Just as a plaintiff may steer its suit to a forum friendly to patentees, an accused infringer will likely choose a venue that is perceived as favorable. Lemley, *supra*, at 410. "[A]ccused infringers prefer forums with a slower average time to trial and a larger pool of technologically sophisticated jurors, such as the Northern District of California." Seaman, 97 Iowa L. Rev. at 450.

Forum shopping, as now-Judge Moore explained, "thwarts the ideal of neutrality in a system whose objective is to create a level playing field for resolution of disputes." Moore, 79 N.C. L. Rev. at 924. "The ultimate result is unpredictability and inconsistency in the application of the law among the district courts." *Ibid.* At bottom, "[t]his instability erodes public confidence in the law and its enforcement and creates doubt about the fairness of the system." *Ibid.*

Close appellate review of Section 285 fee-shifting decisions diminishes the benefit of forum shopping, because outlier decisions are more likely to be corrected on appeal. That is especially true in the patent context, because all appeals are heard by a single court—the Federal Circuit. See *Markman* v. *Westview Instruments, Inc.*, 517 U.S. 370, 390 (1996) ("It was just for the sake of such desirable uniformity that Congress created the Court of Appeals for the

Federal Circuit as an exclusive appellate court for patent cases.").[5]

The *de novo* standard thus combats forum disparities and, as a result, eliminates an incentive for forum shopping. Because the abuse-of-discretion standard places a heavy thumb on the scale in favor of the district court, adopting that standard of review here would reward forum shopping.

Petitioner and its *amici* advance the counter-intuitive proposition that deferential appellate review would somehow deter these litigation abuses. See Pet. Br. 48-50; Br. of Am. Intellectual Prop. Law Assoc. 28-30; Br. of Blue Cross 18-20. Petitioner suggests that a *de novo* standard works as a "one-way ratchet" on appeal: the Federal Circuit is likely to affirm the denial of fees, and it is likely to reverse an award of fees. Pet. Br. 48.

But petitioner offers no evidence to support this supposition. Under a *de novo* standard, the Federal Circuit would review the fee-shifting decision like any other question of law. If the district court reached the correct legal conclusion, the Federal Circuit will affirm; if it erred, the Federal Circuit will reverse. It is impossible to understand why that approach would benefit litigants pressing abusive claims. Certainly petitioner's survey of just three

---

[5] There is some indication that the Federal Circuit is performing this role in its review of district courts' judgments in patent cases: the judicial districts with the highest rate of plaintiff success also have high reversal rates. Teresa Lii, *Shopping for Reversals: How Accuracy Differs Across Patent Litigation Forums*, 12 Chi.-Kent J. Intell. Prop. 31, 43-44 (2013).

cases (Pet. Br. 49) provides no basis for concluding otherwise.[6]

To the contrary, deferential review would tend to benefit—indeed benefit substantially—litigants that engage in forum shopping by insulating trial court against more searching review. The *de novo* standard, by contrast, places all litigants on an equal footing before the Federal Circuit, eliminating any benefit that a particular forum might bestow.

II. A District Court's Determination Whether Fees Should Be Shifted Under Section 285 Is Subject To *De Novo* Review.

The basic standard of review applied by an appellate court is straightforward: "Questions of law are reviewed *de novo* and questions of fact for clear error." *AT&T Mobility LLC* v. *Concepcion*, 131 S. Ct. 1740, 1752 (2011). See also *First Options of Chicago, Inc.* v. *Kaplan*, 514 U.S. 938, 948 (1995) (in reviewing district courts, appellate courts "accept[] findings of fact that are not 'clearly erroneous' but decid[e] questions of law *de novo*").

Frequently, application of a legal standard—for example, "is the patent claim valid"—will require subsidiary determinations of both fact and law. Those subsidiary determinations are reviewed defer-

---

[6] Nor do petitioner's *amici* provide any reason to think that abuse-of-discretion review would tend to encourage fee awards in a manner that deters abusive litigation. One *amicus*, for example, baldly asserts that review of "Section 285 awards *de novo* will mean that more exceptional case findings will be overturned and that fewer cases will ultimately result in the award of attorney's fees under Section 285." Br. of Blue Cross 19. But it provides neither citation nor argument to justify that fear.

entially and *de novo*, respectively. Uncertainty can arise, however, regarding the standard of review applicable to the overarching determination.

The question here involves the district court's determination whether a case is "exceptional" within the meaning of Section 285, entitling the prevailing party to an award of attorney's fees. The separate question regarding the *amount* of fees to be awarded is not at issue. *Pierce*, 487 U.S. at 571 (explaining "it is well established that the abuse-of-discretion standard applies" to the "amount of the attorney's fees award").

We explain in our *amicus* brief in *Octane* that the standard for determining when a case is "exceptional" is whether the losing party's position was "objectively unreasonable." BSA *Octane* Br. 10-27. A district court's determination of objective unreasonableness is subject to *de novo* review.[7]

There can be no serious dispute that any issues of fact subsidiary to the "objective unreasonableness" determination are subject to clearly erroneous review and subsidiary determinations of law are subject to *de novo* review. *Icicle Seafoods, Inc.* v. *Worthington*, 475 U.S. 709, 713-714 (1986); *Pullman-Standard* v. *Swint*, 456 U.S. 273, 287 (1982) ("[I]f a district court's findings rest on an erroneous view of the law, they may be set aside on that basis.").

This case requires the Court to decide whether the "exceptional" determination itself is a "matter[]

---

[7] If the Court concludes in *Octane*, contrary to our submission, that the "exceptional" standard in addition requires proof of subjective bad faith, *de novo* review would at a minimum apply to the objective element of the standard.

of discretion" that is "reviewable for 'abuse of discretion.'" *Pierce*, 487 U.S. at 558. It is not.

A. "Objective Unreasonableness" Is A Legal Determination Subject To *De Novo* Review.

There are three reasons why a district court's ultimate conclusion that a case is "exceptional" should be subject to *de novo* review: Congress's decision to delete the reference to "discretion" in the statutory text; the overwhelmingly legal nature of the determination; and this Court's conclusions in analogous contexts that *de novo* review is appropriate.

1. The statutory text.

The "first" consideration—"the language and structure of the governing statute" (*Pierce*, 487 U.S. at 559)—weighs heavily in favor of *de novo* review.

When initially enacted, Section 285 stated that that a "court may *in its discretion* award reasonable attorney's fees to the prevailing party upon the entry of judgment on any patent case." Act of August 1, 1946, ch. 726, § 1, 60 Stat. 778 (emphasis added).

In revising the fee-shifting statute in the Patent Act of 1952, Congress eliminated the language conferring discretion and added the "exceptional" standard, so that the provision now reads "[t]he court in exceptional cases may award reasonable attorney fees to the prevailing party." 35 U.S.C. § 285. By revising the statute to delete the prior language conferring discretion on the district court, Congress made clear its intent *not* to create an exception from

the general rule that legal determinations are subject to *de novo* review.[8]

2. *The inherently legal nature of the inquiry.*

The Court also has looked to the character of the determination made by the district court in identifying the appropriate standard of review. *E.g.*, *Miller* v. *Fenton*, 474 U.S. 104, 114 (1985) (whether "as a matter of the sound administration of justice, one judicial actor is better positioned than another to decide the issue in question"). Unless the "mix weighs heavily" on the "'fact' side," *de novo* review is appropriate. *Lilly* v. *Virginia*, 527 U.S. 116, 148 (1999) (Rehnquist, J., concurring).

Here, the "mix" tips overwhelmingly toward the "legal" side.

Whether a party's position in litigation is "objectively reasonable" is, on its face, a legal determination. A court must view a case through the lens of a disinterested person to decide whether continued maintenance of the position was reasonable.

---

[8] Petitioner seizes on the word "may," arguing that it suggests deference. Pet. Br. 15. But that ignores the history of the provision, which demonstrates Congress's clear contrary intent. And even standing alone, "may" is much less suggestive of deference than the phrase "unless the court finds," which the Court found ambiguous in *Pierce*. 487 U.S. at 559 (emphasis omitted). Petitioner's reliance on the legislative history of the Patent Act of 1952 is misplaced, because nothing in that history indicates that Congress intended to codify a deferential standard of review—a conclusion that would be directly contrary to Congress's elimination of the reference to deference in the statutory text.

Moreover, questions of law will often predominate in the underlying aspects of the litigation that a court must consider. Review of fee awards under Section 285 confirms that, with substantial frequency, those awards turn on underlying questions of law. For example:

- Claim construction: *Eon-Net LP* v. *Flagstar Bancorp*, 653 F.3d 1314, 1326 (Fed. Cir. 2011) (awarding the defendant fees because the plaintiff "pursued objectively baseless infringement claims" given that "the written description clearly refutes [its] claim construction"); *MarcTec, LLC* v. *Johnson & Johnson*, 664 F.3d 907, 918-919 (Fed. Cir. 2012) ("the record supports the district court's finding that [the patentee] pursued objectively baseless infringement claims" because, among other things, "the specification and prosecution history clearly refute [its] proposed claim construction").
- Failure to state a claim: *Mobile Shelter Sys. USA, Inc.* v. *Grate Pallet Solutions, LLC*, 2013 WL 3815595, at *8 (M.D. Fla. 2013) (awarding fees where the plaintiff pursued "objectively baseless" infringement claims with respect to "a patent that had previously been surrendered in a reissue proceeding," which thereby became "void and unenforceable").
- Claim preclusion: *Sparks* v. *Eastman Kodak Co.*, 49 F. App'x 900, 901 (Fed. Cir. 2002) (summary affirmance of district court's award of fees where the plaintiff's claims were barred by *res judicata*).

- Willful infringement: *Univ. of Pittsburgh of Com. Sys. of Higher Educ.* v. *Varian Med. Sys., Inc.*, 2012 WL 1436569, at *8 (W.D. Pa. 2012) (granting attorney's fees to a prevailing plaintiff in light of willful infringement finding).
- On sale bar: *Brasseler, U.S.A. I, L.P.* v. *Stryker Sales Corp.*, 267 F.3d 1370, 1386 (Fed. Cir. 2001) (affirming award of fees to a prevailing defendant for all costs of defense, where the plaintiff's patent was found invalid by the on-sale bar).
- Obviousness: *Auto. Techs. Int'l, Inc.* v. *Siemens VDO Auto. Corp.*, 744 F. Supp. 2d 646, 653 (E.D. Mich. 2010) (granting fee award to defendants where "there was clear and convincing evidence that Plaintiff should have known that [another] [p]atent rendered [its] [p]atents obvious").

In each of these cases, the considerations underlying the "exceptional" decision involved legal questions.

De novo review of legal questions is a centerpiece of the federal judicial system. By "necessity," district courts, which "preside alone over fast-paced trials," "devote much of their energy and resources to hearing witnesses and reviewing evidence." *Salve Regina Coll.* v. *Russell*, 499 U.S. 225, 231 (1991). Moreover, "the logistical burdens of trial advocacy limit the extent to which trial counsel is able to supplement the district judge's legal research with memoranda and briefs." *Ibid.* Accordingly, "trial judges often must resolve complicated legal questions without benefit of extended reflection or extensive information." *Id.* at 232 (quotation omitted).

Appellate courts, by contrast, "are structurally suited to the collaborative juridical process that promotes decisional accuracy." *Salve Regina Coll.*, 499 U.S. at 232. Appellate courts "are able to devote their primary attention to legal issues" and the "parties' briefs will be refined to bring to bear on the legal issues more information and more comprehensive analysis than was provided for the district judge." *Ibid.* And the appellate panel of judges brings particular weight to bear on the resolution of legal issues through the "fruitful interchange of minds which is indispensable to thoughtful, unhurried decision and its formulation in learned and impressive opinions." *Ibid.* (quoting *Dick* v. *New York Life Ins. Co.*, 359 U.S. 437, 458-459 (1959) (Frankfurter, J., dissenting)).

At bottom, *de novo* review of legal issues serves "the dual goals of doctrinal coherence and economy of judicial administration." *Salve Regina Coll.*, 499 U.S. at 231. Because "objective reasonableness" is such a legal question, *de novo* review is required.

Petitioner suggests that an abuse-of-discretion standard is preferable because subjecting all aspects of the district court's decision to the same standard would be easier to administer. Pet. Br. 23. But even if the ultimate determination of objective unreasonableness were subject to deferential review, all subsidiary legal determinations would be reviewed *de novo*. See page 11, *supra*. Petitioner's ease-of-administration argument makes no sense, especially given the prevalence of legal issues in this context.

Moreover, the *de novo* standard that we advocate is, in fact, the generally-applicable approach; deferring to district court's decisions applying a legal standard is the exception. See, *e.g.*, *Ornelas* v. *United*

States, 517 U.S. 690, 697 (1996). *De novo* review applies here.

3. This Court's decisions on similar questions.

The approach that the Court has taken with respect to review of "objective reasonableness" determinations in other contexts confirms that the *de novo* standard is appropriate here.

In *Professional Real Estate Investors, Inc.* v. *Columbia Pictures Industries, Inc.*, 508 U.S. 49, 62 (1993) ("*PRE*"), the court held that litigation is a "sham"—and therefore may be the basis for an antitrust claim—only if it is "so baseless that no reasonable litigant could realistically expect to secure favorable relief." This standard turns on whether there was "[p]robable cause to institute civil proceedings." *Ibid.*

PRE recognized that this question of objective reasonableness, i.e., "probable cause," may be decided as "a matter of law." 508 U.S. at 63. To be sure, the Court indicated that this is so where "there is no dispute over the predicate facts of the underlying legal proceeding." *Ibid.* But that caveat *always* applies with respect to questions of law subject to *de novo* review; material factual disputes necessarily must be resolved (and their determination subject to deferential review) prior to *de novo* application of the legal standard.

In *Ornelas*, 517 U.S. at 697, the Court held that there is "independent appellate review," i.e. *de novo* review, of determinations whether "probable cause" exists. It rejected deferential review, because that would mean that, "in the absence of any significant difference in the facts, the Fourth Amendment's in-

cidence to turn on whether different trial judges draw general conclusions that the facts are sufficient or insufficient to constitute probable cause." *Ibid.* (quotation omitted). Moreover, *de novo* review "tends to unify precedent" and provides the appellate courts "control" over "the legal principles." *Ibid.* The Court cautioned that a "reviewing court should take care * * * to review findings of historical fact only for clear error." *Id.* at 699.

The objective reasonableness inquiry underlying Section 285 is precisely the same as the legal rule at issue in these cases. The determination whether a party's litigating position is objectively unreasonable—triggering an award of fees under Section 285's "exceptional" standard—is properly subject to *de novo* review. Deferential review is appropriate only for any findings of historical fact that are relevant to the objective unreasonableness.

B. Petitioner's Reliance On *Cooter* And *Pierce* Is Misplaced.

Petitioner's argument for abuse-of-discretion review relies principally on this Court's decisions in *Pierce* and *Cooter*. Pet. Br. 13-24. But the key factors on which those rulings rest are not present in the Section 285 context.

Statutory text. *Pierce* emphasized that the statutory text, by using the active voice—"unless *the court finds* that the position of the United States was substantially justified"—could be read to confer discretion on the district court. 487 U.S. at 559 (quotation omitted). It also pointed to the express abuse-of-discretion standard for an agency's "substantially justified" determinations, observing that Congress likely would not intend to "accord more deference to

an agency's determination that [the agency's] own position was substantially justified than to such a determination by a federal district court." *Ibid.*

Here, by contrast, Congress's decision to eliminate from the statute discretion-conferring language points in the opposite direction. See pages 12-13, *supra*.

Value of the claim. *Pierce* involved an attorney's fee award of $1,129,450 that had been reduced by the appellate court to $322,700. 487 U.S. at 557. The Court emphasized that "the substantial amount of the liability produced by the District Judge's decision" "militat[ed] against the use" of the abuse of discretion standard. *Id.* at 563. If a decision under the EAJA "ordinarily ha[d] such substantial consequences, one might expect it to be reviewed more intensively." *Ibid.* Observing that the "median [fee] award [under the statute] has been less than $3,000," the Court determined that "the generality rather than the exception must form the basis for our rule"—and found deferential review appropriate. *Ibid.*

The facts are precisely the opposite in fee litigation under Section 285. The *median* cost of an infringement case exceeds $6 million per side, and recent fee awards are much larger—$26.9 million, $19 million, $16.8 million, $8.6 million, $8.4 million, and $6.8 million, as just a few examples. See page 4 & n.3, *supra*. For that reason, the amount at stake weighs strongly in favor of *de novo* review.

Best-positioned decision maker. *Pierce* next observed that trial courts were best positioned to determine whether a position advanced by the government was "substantially justified," observing that the inquiry would "[n]ot infrequently" involve questions

of fact. 487 U.S. at 560. See also *Cooter*, 496 U.S. at 403-404. Here, however, Section 285 most frequently turns on questions of law. See pages 13-15, *supra*.

Pierce also considered whether appellate review of a fee award would cause the reviewing court to "invest substantial additional time" (487 U.S. at 560), as well as whether the legal ruling is likely to be of "useful generalization" (*id.* at 562). In the context of the EAJA, because most cases pose "a multifarious and novel question," the cost of appellate court review was high, and the precedential value low. *Ibid.* See also *Cooter*, 496 U.S. at 404.

In the context of Section 285 decisions, by contrast, the fee-award determination is reviewed in tandem with the underlying merits—which involve the very same legal issues. There accordingly is no efficiency gain. See pages 13-15, *supra*.[9] And there is significant precedential value to these determinations.

The factors identified in *Pierce* and *Gell* thus favor *de novo* review here.

III. Whatever The Court Decides With Respect To Section 285, The *De Novo* Standard Applies To Objective Reasonableness Determinations Relating To Willful Infringement.

If the Court adopts petitioner's abuse-of-discretion standard in this case, it should not inadvertently suggest that the same rule applies to the "objective unreasonableness" element of willful infringement determinations.

---

[9] To the extent factual issues are relevant, they will be reviewed deferentially. See page 11, *supra*.

The Patent Act provides that in infringement actions "the court may increase the damages up to three times the amount found or assessed." 35 U.S.C. § 284. This Court has interpreted the provision to require proof of "willful or bad-faith infringement." *Aro Mfg. Co.* v. *Convertible Top Replacement Co.*, 377 U.S. 476, 508 (1964).

The *en banc* Federal Circuit has held that the requisite willfulness is established when (1) "a patentee * * * show[s] by clear and convincing evidence that the infringer acted despite an objectively high likelihood that its actions constituted infringement of a valid patent," and (2) "the patentee * * * demonstrate[s] that this objectively-defined risk * * * was either known or so obvious that it should have been known to the accused infringer." *In re Seagate Tech., LLC*, 497 F.3d 1360, 1371 (Fed. Cir. 2007).

Willful infringement therefore requires proof of both objective and subjective elements. The objective prong of that analysis—which effectively considers whether the accused infringer's acts were objectively unreasonable—is "decided by the judge as a question of law subject to *de novo* review." *Bard Peripheral Vascular, Inc.* v. *W.L. Gore & Assocs.*, 682 F.3d 1003, 1007 (Fed. Cir. 2012).

Accordingly, "[w]hen a defense or noninfringement theory asserted by an infringer is purely legal (e.g., claim construction), the objective recklessness of such a theory is a purely legal question to be determined by the judge." *Bard*, 682 F.3d at 1007. And "[w]hen the objective prong turns on fact questions, as related, for example, to anticipation, or on legal questions dependent on the underlying facts, as related, for example, to questions of obviousness, the judge remains the final arbiter of whether the de-

fense was reasonable, even when the underlying fact question is sent to a jury." *Ibid.* "[T]he ultimate legal question of whether a reasonable person would have considered there to be a high likelihood of infringement of a valid patent should always be decided as a matter of law by the judge." *Id.* at 1008.

A holding that the fee-shifting determination is subject to abuse-of-discretion review would not apply to the objective prong of a willfulness determination for three reasons.

First, petitioner's argument for deferential review relies substantially on the claim that district courts deserve unusual deference with respect to issues involving "supervision of litigation." Pet. Br. 11 (quoting *Pierce*, 487 U.S. at 558 n.1). See also *id.* at 41 (distinguishing cases adopting *de novo* review because "[t]hey do not implicate the kind of fact intensive, 'supervision of litigation' issues which district courts are best positioned to decide"); *Cooter*, 496 U.S. at 404 ("Deference to the determination of courts on the front lines of litigation will enhance these courts' ability to control the litigants before them.").

If the Court were to rule in petitioner's favor on that basis, the Court's rationale would not extend to willful infringement, which relates to the defendant's primary conduct and has nothing to do with the supervision of litigation.

Second, the considerations supporting *de novo* review in the context of willful infringement are stronger than the comparable factors with respect to attorney's fees. To begin with, while the amounts awarded as attorney's fees are themselves quite large, they pale in comparison to the hundreds of

millions that may be awarded for willful infringement. Seaman, 97 Iowa L. Rev. at 422.

Bard itself is a textbook example: after the jury awarded more than $185 million in compensatory damages, the district court *doubled* that amount as enhanced damages—demonstrating the very large amounts that can turn on the correctness of a willfulness determination. See *Bard Peripheral Vascular, Inc.* v. *W.L. Gore & Assocs.*, 670 F.3d 1171, 1191 (Fed. Cir. 2012).

Given that willful infringement in patent damages is responsible, quite literally, for some of the largest verdicts in history, the "substantial consequences" of such a decision would lead one to "expect it to be reviewed more intensively." *Pierce*, 487 U.S. at 563.

Moreover, willful infringement determinations have enormous precedential value, as they set the parameters for such awards in future cases. There are, accordingly, significant "law-clarifying benefits" for *de novo* review. *Pierce*, 487 U.S. at 561.

Third, the "punitive" nature of enhanced damages for willful infringement also weighs in favor of *de novo* review. *In re Seagate Tech.*, 497 F.3d at 1371. Because punitive damages are, at bottom, "quasi-criminal," the Court has held that review of punitive damages, at least with respect to whether they comport with constitutional limitations, is "*de novo*." *Cooper Indus., Inc.* v. *Leatherman Tool Grp., Inc.*, 532 U.S. 424, 432-436 (2001). For the same reasons, *de novo* review should attach to willful infringement.

At bottom, whatever the Court may decide in this case, it should not inadvertently undermine the Federal Circuit's holding in *Bard*. The objective element

of willful infringement determinations are appropriately subject to *de novo* review.

CONCLUSION

The judgment of the court of appeals should be affirmed.

Respectfully submitted.

ANDREW J. PINCUS
Counsel of Record
PAUL W. HUGHES
JAMES F. TIERNEY
Mayer Brown LLP
1999 K Street, NW
Washington, DC 20006
(202) 263-3000
apincus@mayerbrown.com

Counsel for Amicus Curiae

JANUARY 2014

AMICUS CURIAE BRIEF

RECORD
AND
BRIEFS

Supreme Court, U.S.
FILED
DEC 9 - 2013
OFFICE OF THE CLERK

Nos. 12-1163 & 12-1184

In the
Supreme Court of the United States

HIGHMARK INC.,
Petitioner,
v.
ALLCARE HEALTH MANAGEMENT SYSTEMS, INC.,
Respondent.

OCTANE FITNESS, LLC,
Petitioner,
v.
ICON HEALTH & FITNESS, INC.,
Respondent.

On Writs of Certiorari to the United States Court of Appeals for the Federal Circuit

BRIEF FOR *AMICI CURIAE* GOOGLE INC., CISCO SYSTEMS, INC., FACEBOOK, INC., HTC CORP., INTEL CORPORATION, LINKEDIN CORP., MOTOROLA MOBILITY LLC, NETFLIX, NEWEGG INC., RACKSPACE HOSTING, INC., SALESFORCE.COM, INC., T-MOBILE USA, INC., VERIZON COMMUNICATIONS INC., AND VIZIO, INC., IN SUPPORT OF NEITHER PARTY

PAUL D. CLEMENT
Counsel of Record
D. ZACHARY HUDSON
BANCROFT PLLC
1919 M Street NW, Suite 470
Washington, DC 20036
(202) 234-0090
pclement@bancroftpllc.com
Counsel for Amici Curiae

December 9, 2013

CORPORATE DISCLOSURE STATEMENT

Google Inc. has no parent corporation and no publicly traded corporation owns 10% or more of its stock.

Cisco Systems, Inc. has no parent corporation and no publicly traded corporation owns 10% or more of its stock.

Facebook, Inc. has no parent corporation and no publicly traded corporation owns 10% or more of its stock.

HTC Corp. has no parent corporation and no publicly traded corporation owns 10% or more of its stock.

Intel Corporation has no parent corporation and no publicly traded corporation owns 10% or more of its stock.

LinkedIn Corp. has no parent corporation and no publicly traded corporation owns 10% or more of its stock.

Motorola Mobility LLC is owned by Google Inc.

Netflix has no parent corporation and no publicly traded corporation owns 10% or more of its stock.

Newegg Inc. has no parent corporation and no publicly traded corporation owns 10% or more of its stock.

Rackspace Hosting, Inc. has no parent corporation and no publicly traded corporation owns 10% or more of its stock.

salesforce.com, inc. has no parent corporation and no publicly traded corporation owns 10% or more of its stock.

T-Mobile USA, Inc. is a wholly-owned subsidiary of T-Mobile US, Inc. T-Mobile Global Holding GmbH ("Holding"), a German entity, owns more than 10% of T-Mobile US's shares, which are publicly traded. Holding is a wholly-owned subsidiary of T-Mobile Global Zwischenholding GmbH ("Global"), a German entity. Global is a wholly-owned subsidiary of Deutsche Telekom AG, a German entity.

Verizon Communications Inc. has no parent corporation and no publicly traded corporation owns 10% or more of its stock.

VIZIO, Inc. has no parent corporation and the only publicly held company that owns 10% or more of VIZIO's stock is AmTRAN Technology Co., Ltd.

TABLE OF CONTENTS

CORPORATE DISCLOSURE STATEMENT i
TABLE OF AUTHORITIES iv
STATEMENT OF INTEREST 1
SUMMARY OF ARGUMENT 1
ARGUMENT 4
I. The Federal Circuit Has Made It Far Too Difficult For Alleged Infringers To Recover Attorneys' Fees In Exceptional Cases. 4
A. Federal Circuit Precedent Unduly Limits the Universe of Exceptional Cases. 6
B. Subjective Bad Faith and Objective Unreasonableness Each Provide Independent Grounds for an Exceptional Case Finding 10
C. Current Federal Circuit Case Law Tips the Scales in Favor of Patentees, Ignoring the Text of § 285 and This Court's Precedent. 15
D. Federal Circuit § 285 Precedent Encourages Frivolous Patent Litigation. .. 18
II. When An Exceptional Case Determination Is Based On The Objective Reasonableness Of A Claim Or Defense, That Determination Is A Question Of Law Reviewable *De Novo* 21
III. The Standard Of Review This Court Adopts For Exceptional Case Determinations Should Not Impact The Standard Of Review For Willful Infringement Findings. 29
CONCLUSION 33

TABLE OF AUTHORITIES

Cases

ADM Corp. v. Speedmaster Packaging Corp.,
525 F.2d 662 (3d Cir. 1975) 14

Bard Peripheral Vascular, Inc.
v. W.L. Gore & Assocs., Inc.,
670 F.3d 1171 (Fed. Cir. 2012) 27, 33

Bard Peripheral Vascular, Inc.
v. W.L. Gore & Assocs., Inc.,
682 F.3d 1003 (Fed. Cir. 2012) 30, 31

Bill Johnson's Rests., Inc. v. NLRB,
461 U.S. 731 (1983) 12

Bridgeport Music, Inc.
v. Rhyme Syndicate Music,
376 F.3d 615 (6th Cir. 2004) 13

Bridgeport Music, Inc. v. WB Music Corp.,
520 F.3d 588 (6th Cir. 2008) 9

Bridgmon v. Array Sys. Corp.,
325 F.3d 572 (5th Cir. 2003) 13

Brooks Furniture Mfg., Inc.
v. Dutailier Int'l, Inc.,
393 F.3d 1378 (Fed. Cir. 2005) 4, 5, 22, 28

Champion v. Outlook Nashville, Inc.,
380 F.3d 893 (6th Cir. 2004) 24

Christianburg Garment Co. v. EEOC,
434 U.S. 412 (1978) 11

Cloaninger ex rel. Estate of Cloaninger
v. McDevitt,
555 F.3d 324 (4th Cir. 2009) 24

Colortronic Reinhard & Co., K.G. v. Plastic Controls, Inc., 668 F.2d 1 (1st Cir. 1981) 14

Colston v. Barnhart, 146 F.3d 282 (5th Cir. 1998) 24

Cooter & Gell v. Hartmax Corp., 496 U.S. 384 (1990) 28, 29

Curley v. Klem, 499 F.3d 199 (3d Cir. 2007) 24

Cybor Corp. v. FAS Techs., Inc., 138 F.3d 1448 (Fed. Cir. 1998) 23

Deyerle v. Wright Mfg. Co., 496 F.2d 45 (6th Cir. 1974) 15

Diamond Star Bldg. Corp. v. Freed, 30 F.3d 503 (4th Cir. 1994) 13, 25

Dominant Semiconductors Sdn. Bhd. v. OSRAM GmbH, 524 F.3d 1254 (Fed. Cir. 2008) 16

DuBuit v. Harwell Enters., Inc., 540 F.2d 690 (4th Cir. 1976) 14

E. R.R. Presidents Conference v. Noerr Motor Freight, Inc., 365 U.S. 127 (1961) 12

eBay Inc. v. MercExchange, L.L.C., 547 U.S. 388 (2006) 11, 18, 25

Engleman v. Deputy Murray, 546 F.3d 944 (8th Cir. 2008) 24

Eon-Net LP v. Flagstar Bancorp., 653 F.3d 1314 (Fed. Cir. 2011) 5, 6, 10

Eudy
v. Motor-Guide, Herschede Hall Clock Co.,
651 F.2d 299 (5th Cir. 1981) 15

F.D. Rich Co.
v. United States ex rel. Indus. Lumber Co.,
417 U.S. 116 (1974) 11, 32

FM Indus., Inc. v. Citicorp Credit Servs., Inc.,
614 F.3d 335 (7th Cir. 2010) 8

Fogerty v. Fantasy, Inc.,
510 U.S. 517 (1994) ..... *passim*

Forest Labs., Inc. v. Abbott Labs.,
339 F.3d 1324 (Fed. Cir. 2003) 22

Fox Film Corp. v. Doyal,
286 U.S. 123 (1932) 7

García–Goyco
v. Law Envtl. Consultants, Inc.,
428 F.3d 14 (1st Cir. 2005) 13

Gonzales v. Duran,
590 F.3d 855 (10th Cir. 2009) 24

Halliburton Co. v. Dow Chem. Co.,
514 F.2d 377 (10th Cir. 1975) 15

Hensley v. Eckerhart,
461 U.S. 424 (1983) 6

i4i Ltd. P'ship v. Microsoft Corp.,
598 F.3d 831 (Fed. Cir. 2010) 27

ICU Med., Inc. v. Alaris Med. Sys., Inc.,
558 F.3d 1368 (Fed. Cir. 2009) 27

iLor, LLC v. Google, Inc.,
631 F.3d 1372 (Fed. Cir. 2011) 31

In re Seagate Tech., LLC,
497 F.3d 1360 (Fed. Cir. 2007) 30

JCW Invs., Inc. v. Novelty, Inc.,
509 F.3d 339 (7th Cir. 2007) 13, 14

Johnson v. City of Fort Lauderdale, Fla.,
126 F.3d 1372 (11th Cir. 1997) 24

Kahn v. Dynamics Corp. of Am.,
508 F.2d 939 (2d Cir. 1974) 14

Latin Am. Music Co. v. Am. Soc'y of Composers, Authors & Publishers (ASCAP),
629 F.3d 262 (1st Cir. 2010) 14

Lazare Kaplan Int'l, Inc. v. Photoscribe Techs., Inc.,
628 F.3d 1359 (Fed. Cir. 2010) 27

Lennon v. Miller,
66 F.3d 416 (2d Cir. 1995) 24

Lieb v. Topstone Indus., Inc.,
788 F.2d 151 (3d Cir. 1986) 6, 13, 18, 25

Lighting Ballast Control LLC v. Philips Elecs. N. Am. Corp.,
500 F. App'x 951 (Fed. Cir. 2013) 23

Loctite Corp. v. Fel-Pro, Inc.,
667 F.2d 577 (7th Cir. 1981) 15

MarcTec, LLC v. Johnson & Johnson,
664 F.3d 907 (Fed. Cir. 2012) 16, 17, 27

Markman v. Westview Instruments, Inc.,
517 U.S. 370 (1996) 29

Mary Ellen Enters., Inc. v. Camex, Inc.,
68 F.3d 1065 (8th Cir. 1995) 14

Matthew Bender & Co. v. W. Publ'g Co.,
240 F.3d 116 (2d Cir. 2001) 13

Maurice A. Garbell, Inc. v. Boeing Co.,
546 F.2d 297 (9th Cir. 1976) 15

Medtronic Navigation, Inc. v. BrainLAB Medizinische Computersysteme GmbH,
603 F.3d 943 (Fed. Cir. 2010) 16

Merck & Co. v. Teva Pharm. USA, Inc.,
395 F.3d 1364 (Fed. Cir. 2005) 23

Messerschmidt v. Millender,
132 S. Ct. 1235 (2012) 24

Meyer Intellectual Props. Ltd. v. Bodum, Inc.,
690 F.3d 1354 (Fed. Cir. 2012) 27

Miller v. Fenton,
474 U.S. 104 (1985) 26

MiTek Holdings, Inc. v. Arce Eng'g Co.,
198 F.3d 840 (11th Cir. 1999) 14

Monolithic Power Sys., Inc. v. O2 Micro Int'l Ltd.,
726 F.2d 1359 (Fed. Cir. 2013) 27

Old Reliable Wholesale, Inc. v. Cornell Corp.,
635 F.3d 539 (Fed. Cir. 2011) 5, 10

Palladium Music, Inc. v. EatSleepMusic, Inc.,
398 F.3d 1193 (10th Cir. 2005) 14

Pearson v. Callahan,
555 U.S. 223 (2009) 24

Perfect 10, Inc. v. CCBill LLC,
488 F.3d 1102 (9th Cir. 2007) 14

Pierce v. Underwood,
487 U.S. 552 (1988) 25, 26, 33

Pitt v. District of Columbia,
491 F.3d 494 (D.C. Cir. 2007) 24

Positive Black Talk Inc.
v. Cash Money Records Inc.,
394 F.3d 357 (5th Cir. 2004) 9

Powell v. Home Depot U.S.A., Inc.,
663 F.3d 1221 (Fed. Cir. 2011) 27

Prof'l Real Estate Investors, Inc.
v. Columbia Pictures Indus., Inc.,
508 U.S. 49 (1993) 11, 12, 25

Raylon, LLC
v. Complus Data Innovations, Inc.,
700 F.3d 1361 (Fed. Cir. 2012) 33

Riccardo v. Rausch,
375 F.3d 521 (7th Cir. 2004) 24

Rodriguez
v. Maricopa Cnty. Comty. Coll. Dist.,
605 F.3d 703 (9th Cir. 2010) 24

Rosciszewski v. Arete Assocs., Inc.,
1 F.3d 225 (4th Cir. 1993) 14

Scott v. Harris,
550 U.S. 372 (2007) 24

Sitrick v. Dreamworks, LLC,
516 F.3d 993 (Fed. Cir. 2008) 23

Slip Track Sys., Inc. v. Metal-Lite, Inc.,
304 F.3d 1256 (Fed. Cir. 2002) 23

Sony Corp. of Am.
v. Universal City Studios, Inc.
464 U.S. 417 (1984) 7

Square Liner 360°, Inc. v. Chisum,
691 F.2d 362 (8th Cir. 1982) 15

Takeda Chem. Indus., Ltd. v. Mylan Labs, Inc.,
549 F.3d 1381 (Fed. Cir. 2008) 27

The Appollon,
22 U.S. 362 (1824) 11

United States v. Garzon,
119 F.3d 1446 (10th Cir. 1997) 25

United States v. Nerber,
222 F.3d 597 (9th Cir. 2000) 25

United States v. Paramount Pictures, Inc.,
334 U.S. 131 (1948) 7

United States v. Welliver,
976 F.2d 1148 (8th Cir. 1992) 25

Vaughan v. Atkinson,
369 U.S. 527 (1962) 11, 32

Wedgetail Ltd. v. Huddleston Deluxe, Inc.,
576 F.3d 1302 (Fed. Cir. 2009) 22

Wheaton and Donaldson v. Peters & Grigg,
33 U.S. 591 (1834) 7

Wilson v. City of Boston,
421 F.3d 45 (1st Cir. 2005) 24

Young v. Lumenis, Inc.,
492 F.3d 1336 (Fed. Cir. 2007) 23

Constitutional Provision & Statutes

U.S. Const. art. 1, § 8, cl. 8 7

17 U.S.C. § 505 6

35 U.S.C. § 284 30

35 U.S.C. § 285 ..... *passim*

Other Authorities

John R. Allison et al., *Patent Quality and Settlement Among Repeat Patent Litigants*, 99 Geo. L.J. 677 (2011) 20

Colleen Chien, *Patent Trolls by the Numbers*, Patently-O (Mar. 14, 2013), http://www.patentlyo.com/patent/2013/03/chien-patent-trolls.html 19

Colleen Chien, *Startups and Patent Trolls*, Santa Clara Law Digital Commons (2012) 20

Executive Office of the President, *Patent Assertion and U.S. Innovation* (June 4, 2013) 20, 21

Google, BlackBerry, Earthlink & Red Hat, *Comments to the Federal Trade Commission and U.S. Department of Justice on Patent Assertion Entities* (Apr. 5, 2013) 21

Sara Jeruss et al., *The AIA 500 Expanded: The Effects of Patent Monetization Entities* (UC Hastings Research Paper No. 45, 2013) 18

Sara Jeruss et al., *The America Invents Act 500: Effects of Patent Monetization Entities on US Litigation*, 11 Duke L. & Tech. Rev. 357 (2012) 20

Litigations Over Time, PatentFreedom.com (Aug. 6, 2013), https://www.patentfreedom.com/about-npes/litigations/ 19

Ranganath Sudarshan, *Nuisance-Value Patent Suits: An Economic Model and Proposal*, 25 Santa Clara Computer & High Tech L.J. 159 (2008) 20

Trends in Awards of Attorneys' Fees under 35 U.S.C. § 285 between 2003-2005 and 2010-2012, LexMachina.com (Dec. 9, 2013), https://lexmachina.com/2013/12/trends-in-awards-of-attorneys-fees-under-35-u-s-c-%C2%A7-285-between-2003-2005-and-2010-2012/ 15, 16

U.S. Gov't Accountability Office, GAO-13-465, Intellectual Property: Assessing Factors That Affect Patent Infringement Litigation Could Help Improve Patent Quality (2013), http://www.gao.gov/assets/660/657103.pdf 19

STATEMENT OF INTEREST[1]

Amici Google, Cisco Systems, Facebook, HTC, Intel, LinkedIn, Motorola Mobility, Netflix, Newegg, Rackspace, salesforce.com, T-Mobile, Verizon, and Vizio are leading providers of high-technology products and services and leaders in their respective fields. Having obtained patents based on their own research and development efforts, and also having spent considerable resources defending themselves against hundreds of meritless infringement claims, *amici* support a balanced patent system that discourages both infringement and meritless allegations of infringement. *Amici* believe that a construction of 35 U.S.C. § 285 that allows alleged infringers to recover fees when patentees abuse the patent system and make unwarranted infringement allegations, and a standard of review in § 285 cases that appropriately distinguishes between questions of law and fact, is critical to that balance.

SUMMARY OF ARGUMENT

Congress provided broad authority to courts to award attorneys' fees in "exceptional cases." 35 U.S.C. § 285. Despite that broad authorization, the Federal Circuit has created limits on fees and pro-plaintiff presumptions that have no basis in the statutory text. While the Federal Circuit has

---

[1] Pursuant to Supreme Court Rule 37.6, *amici curiae* state that no counsel for any party authored this brief in whole or in part and that no entity or person, aside from *amici curiae* and their counsel, made any monetary contribution toward the preparation or submission of this brief. Pursuant to Supreme Court Rule 37.3, counsel of record for all parties have consented to this filing in letters on file with the Clerk's office.

correctly recognized that an exceptional case finding may be appropriate under a variety of circumstances, it has purported to limit fees to "only" those circumstances it has identified and refused to assess a patentee's conduct as a whole when conducting exceptional case analysis. In particular, the Federal Circuit has required *both* subjective bad faith *and* objectively unreasonable infringement allegations before awarding attorneys' fees against patentees absent fraud or litigation misconduct. Subjective bad faith, of course, is notoriously difficult to prove. Worse still, the Federal Circuit has adopted a presumption that patentees allege infringement in good faith without a countervailing presumption that alleged infringers defend patent cases in good faith. And, in some cases, that court has applied a standard for objective unreasonableness that is almost impossible to meet. The combined effect of these rules is to put a thumb on the scale in favor of patentees despite Congress' decision to make attorneys' fees equally available to prevailing plaintiffs and defendants.

In addressing the question presented in *Octane Fitness v. Icon Health and Fitness*, No. 12-1184, this Court should correct these errors. This Court should make clear that there is not an exclusive list of factors that can make a case exceptional under § 285. The factors identified by the Federal Circuit to date—including factors such as fraud in procuring the patent, lodging frivolous filings, conduct violating Rule 11, bringing a claim in subjective bad faith, and advancing objectively baseless legal theories—are appropriately viewed as a list of nonexhaustive factors, which may be supplemented in future cases,

that can each provide an independent basis for an exceptional case finding. Along the same lines, this Court should underscore that when no individual factor by itself supports an exceptional case finding, these factors should be considered together and not treated as silos that trigger fees only if at least one is filled to the top. Cases that are not exceptional based on only one of these factors may nonetheless be exceptional when considered in light of a party's overall conduct. Relatedly, this Court should reject the Federal Circuit's insistence that fees are appropriate only when both subjective bad faith and objective unreasonableness are shown, and make clear that a patentee should not benefit from a presumption of good faith when fees are at issue, or a test for objective unreasonableness that insulates patentees from any risk of fees for pursuing meritless claims. Providing guidance of this sort to the Federal Circuit will not only bring § 285 case law in closer alignment with this Court's precedents, but also deter some of the worst practices of patent assertion entities.

Separate from the question of the appropriate standard for making an exceptional case finding, in answering the question presented in *Highmark Inc. v. Allcare Management Systems, Inc.*, No. 12-1163, this Court should hold that when an exceptional case determination turns on the objective reasonableness of a claim of alleged infringement or a defense to infringement, the district court's conclusion regarding that objective factor involves consideration of a question of law subject to *de novo* review. Particularly in light of the treatment of objective determinations in other areas of law, there is a

fundamental disconnect between an objective standard and deferential review. As long as objective unreasonableness is a component of the § 285 standard for awarding fees, that objective component should be reviewed *de novo*.

Finally, if this Court holds that all aspects of a § 285 fee determination—including objective reasonableness—are to be reviewed under a deferential standard, it should make clear that its conclusion does not extend to the separate and important standard of review for assessing willful infringement. The Federal Circuit has recently clarified that the objective component of the willfulness determination is reviewed *de novo*. If this Court were to find that all aspects of attorneys' fee awards are reviewed deferentially, it should make clear that its conclusion depends on factors unique to the attorneys' fees context, and would not extend to other contexts.

ARGUMENT

I. The Federal Circuit Has Made It Far Too Difficult For Alleged Infringers To Recover Attorneys' Fees In Exceptional Cases.

Section 285 provides that "[t]he court in exceptional cases may award reasonable attorney fees to the prevailing party." 35 U.S.C. § 285. Elaborating that standard, the Federal Circuit has developed a list of circumstances that can warrant an exceptional case finding. "[F]raud or inequitable conduct in procuring the patent" can justify such a finding. *Brooks Furniture Mfg., Inc. v. Dutailier Int'l, Inc.*, 393 F.3d 1378, 1381 (Fed. Cir. 2005). "[L]odging frivolous filings and engaging in vexatious or

unjustified litigation" can also make a case exceptional, *Eon-Net LP v. Flagstar Bancorp.*, 653 F.3d 1314, 1324 (Fed. Cir. 2011), as can unethical or unprofessional conduct, violations of Rule 11, or willful infringement. *See Brooks*, 393 F.3d at 1381; *Old Reliable Wholesale, Inc. v. Cornell Corp.*, 635 F.3d 539, 543-44 (Fed. Cir. 2011). Nonetheless, the Federal Circuit has artificially narrowed the circumstances in which fees may be awarded. "Absent litigation misconduct or misconduct in securing the patent, sanctions under § 285 may be imposed against the patentee *only* if *both* (1) the patentee brought the litigation in bad faith; *and* (2) the litigation is objectively baseless." *Eon-Net LP*, 653 F.3d at 1324 (emphasis added).

There is no basis for this artificial constriction of the circumstances in which fees may be awarded to prevailing parties in exceptional cases, nor anything to suggest that the Federal Circuit has exhaustively identified all the circumstances in which fees are appropriate. Nor is there any statutory basis for requiring both subjective bad faith and objective unreasonableness. The Federal Circuit has combined this narrowed view of § 285 with presumptions and legal tests that make it very difficult to hold a patentee responsible for the substantial attorneys' fees necessitated by infringement assertions that are as aggressive as they are meritless. This Court needs to even the scales and deter unjustified patent assertions and defenses alike.

A. Federal Circuit Precedent Unduly Limits the Universe of Exceptional Cases.

There is no justification in the text of § 285 or relevant precedent for limiting the constellation of exceptional cases to "only" those circumstances already identified by the Federal Circuit. *Eon-Net LP*, 653 F.3d at 1324. This Court effectively recognized as much in addressing the closely analogous attorneys' fees provision in the Copyright Act. In *Fogerty v. Fantasy, Inc.*, 510 U.S. 517 (1994), this Court defined the scope of 17 U.S.C. § 505, which states that "the court may ... award a reasonable attorney's fee to the prevailing party as part of the costs" in copyright infringement cases. In doing so, the Court held that "'[t]here is no precise rule or formula for making these determinations,' but instead equitable discretion should be exercised 'in light of the considerations we have identified.'" *Fogerty*, 510 U.S. at 534 (quoting *Hensley v. Eckerhart*, 461 U.S. 424, 436-37 (1983)). The Court then noted with approval a list of "nonexclusive factors to guide courts' discretion," including "'frivolousness, motivation, objective unreasonableness (both in the factual and in the legal components of the case) and the need in particular circumstances to advance considerations of compensation and deterrence.'" *Id.* at 534 n.19 (quoting *Lieb v. Topstone Indus., Inc.*, 788 F.2d 151, 156 (3d Cir. 1986)).

Fogerty's warning that "'[t]here is no precise rule or formula for making'" attorneys' fees determinations in copyright cases, and blessing of a

list of "nonexclusive factors," *id.* at 534 & n.19, should inform the proper approach to fees under the Patent Act. *Fogerty* itself pointed out "that the federal fee-shifting statutes" in the patent and copyright fields are "closely related" and noted that the Patent Act "contain[s] language similar to that of § 505, with the added proviso that fees are only to be awarded in 'exceptional cases.'" *Id.* at 525 n.12. Even apart from the similarity in the underlying statutory text, *Fogerty*'s guidance is clearly relevant. Congress regulates copyrights and patents pursuant to the same source of constitutional authority—its mandate to "promote the Progress of Science and the useful Arts, by securing for limited Times to Authors and Inventors the exclusive Right to their respective Writings and Discoveries." U.S. Const. art. 1, § 8, cl. 8. Although the two bodies of law are "not identical twins," it is often appropriate to apply copyright doctrine in the patent context and vice versa because of the constitutional and "historic kinship between patent law and copyright law." *Sony Corp. of Am. v. Universal City Studios, Inc.* 464 U.S. 417, 439 & n.19 (1984); *see United States v. Paramount Pictures, Inc.*, 334 U.S. 131, 158 (1948); *Fox Film Corp. v. Doyal*, 286 U.S. 123, 131 (1932); *Wheaton and Donaldson v. Peters & Grigg*, 33 U.S. 591, 657-58 (1834).

Accordingly, this Court should make clear that "'[t]here is no precise rule or formula for'" determining whether a case is exceptional under § 285. *Fogerty*, 510 U.S. at 534. Nothing in § 285's text limits the circumstances under which a case may be found exceptional. The factors that the Federal Circuit has identified to date—fraud or inequitable conduct in procuring the patent, lodging frivolous

filings and engaging in vexatious and unjustified litigation, conduct violating Rule 11, willful infringement, bringing a claim in subjective bad faith, and advancing objectively baseless legal theories—are useful as a list of "nonexclusive factors." *Id.* at 534 & n.19. But the Federal Circuit is wrong to suggest that those factors exhaustively cover the proverbial waterfront. Additional factors identified in copyright cases, but not by the Federal Circuit—such as "advanc[ing] considerations of compensation and deterrence," *id.*—may be germane to exceptional case deliberations in a specific patent case. And there is also room for the consideration of other factors, such as continuing to pursue infringement allegations after the lack of merit has become apparent, opposing a litigation stay pending review of the patents-in-suit by the Patent Office, or making an outrageous damages demand that infects the framing and conduct (and unnecessarily increases the costs) of the litigation. *C.f. FM Indus., Inc. v. Citicorp Credit Servs., Inc.*, 614 F.3d 335, 340 (7th Cir. 2010) (concluding that a $15 billion damages demand in a copyright case, "a stupendous figure that led defendants to generate far more paper, and endure higher legal bills, than any plausible claim would have warranted" "richly deserve[d] the label vexatious").

To be sure, circumstances of this sort could be characterized as individual species of bad faith or litigation misconduct (although courts generally have not viewed them as such) and thus could be shoehorned under existing Federal Circuit precedent. But reminding the Federal Circuit that limiting the attributes that can make a case exceptional is

inconsistent with the relevant statutory language and this Court's precedent will ensure that such cases are not deemed unexceptional simply because they do not neatly fall within one of the Federal Circuit's pre-defined categories.[2]

By the same token, this Court should stress that when none of the factors identified by the Federal Circuit supports an exceptional case finding on its own, those factors—and whatever other factors might be relevant in a given case—should be analyzed in concert, not as mutually exclusive and collectively exhaustive factors. There is a real danger that in applying existing Federal Circuit precedent, district courts will focus on individual strands of exceptional case precedent and miss a pattern of misconduct rendering the case as a whole exceptional. A

---

[2] *Amici*'s discussion of copyright precedent is not meant to suggest that the standards for awarding fees in copyright and patent cases should be identical. As this Court recognized in *Fogerty*, the relevant provisions of the Copyright and Patent Acts use different language, and that textual difference may warrant a different substantive standard. For example, some courts have held that "[t]he grant of fees and costs 'is the rule rather than the exception'" in copyright cases, and that attorneys' fees "'should be awarded routinely.'" *Bridgeport Music, Inc. v. WB Music Corp.*, 520 F.3d 588, 592 (6th Cir. 2008) (quoting *Positive Black Talk Inc. v. Cash Money Records Inc.*, 394 F.3d 357, 380 (5th Cir. 2004)). Such a presumption, even if appropriate in copyright cases, may be inconsistent with § 285's "exceptional case" language. But this Court's observations that "'[t]here is no precise rule or formula for'" awarding such fees, *Fogerty*, 510 U.S. at 534, that the use of a list of "nonexclusive factors" is appropriate, *id.* at 534 n.19, and (as discussed *infra*) that "[p]revailing plaintiffs and prevailing defendants are to be treated alike," *id.* at 534—should inform the standard for awarding attorneys' fees under § 285.

litigant's conduct in procuring a patent should not be viewed as hermetically sealed off from a litigant's bad faith, vexatious litigation practices, or unreasonable legal theories. It may be that, in a given case, none of the individual factors identified by the Federal Circuit considered in isolation makes a case exceptional, but that the factors considered in total make the exceptional nature of the case clear.

B. Subjective Bad Faith and Objective Unreasonableness Each Provide Independent Grounds for an Exceptional Case Finding.

Not only has the Federal Circuit adopted a siloed and circumscribed view of the relevant exceptional case factors, it has held that two of those factors must both be present before either can support an exceptional case finding. *See, e.g.*, *Eon-Net LP*, 653 F.3d at 1324 ("sanctions under § 285 may be imposed against the patentee only if *both* (1) the patentee brought the litigation in bad faith; *and* (2) the litigation is objectively baseless" (emphasis added)). The Federal Circuit has unequivocally stated that "subjective considerations of bad faith are irrelevant if the challenged claims or defenses are not objectively baseless," and that objective unreasonableness without subjective bad faith is similarly insufficient. *Old Reliable*, 635 F.3d at 547 n.4. There is no basis in precedent, statutory text, or common sense for this rule.

The Federal Circuit's conclusion that "subjective considerations of bad faith" cannot alone support an award of attorneys' fees is irreconcilable with this Court's case law, not to mention nearly two centuries

of legal practice. Even apart from a statutory fee-shifting provision like § 285, this Court has "long recognized that attorneys' fees may be awarded to a successful party when his opponent has acted in bad faith." *F.D. Rich Co. v. United States ex rel. Indus. Lumber Co.*, 417 U.S. 116, 129 (1974) (citing *Vaughan v. Atkinson*, 369 U.S. 527, 530 (1962) (describing the "allowance of counsel fees" as "part of the historic equity jurisdiction of the federal courts" (citing *The Appollon*, 22 U.S. 362, 379 (1824)))); *Christianburg Garment Co. v. EEOC*, 434 U.S. 412, 419 (1978) ("under the American common-law rule attorney's fees may be awarded against a party who has proceeded in bad faith"). This Court underscored in *eBay* that patent law is not a breed apart; bedrock equitable principles apply with the same "force to disputes arising under the Patent Act" as they do to all other disputes. *eBay Inc. v. MercExchange, L.L.C.*, 547 U.S. 388, 391 (2006).

A statutory fee-shifting provision, like § 285, expands the authority to shift fees; it can hardly be read to restrict the historic authority of courts to award fees for bad faith conduct. There is certainly nothing in § 285's text that so much as hints that an exceptionally egregious instance of bad faith would not render a case "exceptional."

It is no surprise then that the Federal Circuit did not derive its conjunctive test from § 285's text. Instead, the Federal Circuit borrowed the standard from this Court's decision in *Professional Real Estate Investors, Inc. v. Columbia Pictures Industries, Inc.*, 508 U.S. 49 (1993) ("*PRE*"), addressing the scope of the "sham" exception to the doctrine of antitrust

immunity. In *PRE*, this Court held that a cause of action had to be both objectively baseless and brought in subjective bad faith for the sham exception to apply. *See id.* at 57. But that demanding standard reflects both the important First Amendment interests at stake in petitioning the government "'with respect to the passage or enforcement of laws,'" and the distinct chilling effect of treble damages. *Id.* at 58 (quoting *E. R.R. Presidents Conference v. Noerr Motor Freight, Inc.*, 365 U.S. 127, 139 (1961)). Neither concern translates to this context. The broader First Amendment concerns implicated by efforts to make petitioning activity part and parcel of an antitrust conspiracy are not triggered by ordinary bad faith litigation. *See, e.g., Bill Johnson's Rests., Inc. v. NLRB*, 461 U.S. 731, 743 (1983) ("baseless litigation is not immunized by the First Amendment right to petition"). And the prospect of paying attorneys' fees directly traceable to bad faith or objectively unreasonable legal theories has nothing like the chilling effect associated with treble damages.

In all events, the Federal Circuit's conjunctive standard has little to recommend it as a matter of common sense. While courts sometimes favor an objective test to avoid difficult inquiries into subjective bad faith, the Federal Circuit's conjunctive test requires such a subjective inquiry even when an objective test is readily satisfied. Conversely, in a case where a court can make a finding of subjective bad faith, no public policy supports withholding attorneys' fees if the underlying claims are very weak without crossing the threshold into objective unreasonableness. Indeed, a case of extreme bad

faith and very weak but not quite objectively unreasonable claims may be more deserving of attorneys' fees than a case that involves less egregious bad faith and objectively unreasonable claims. The Federal Circuit's conjunctive test heavily skews the inquiry against awarding fees in favor of the prevailing defendant falsely accused of infringement. While such a skewed test makes sense in a context like *PRE*, it is a complete misfit for a facially-neutral attorneys' fees provision designed to shift fees to prevailing plaintiffs and defendants alike.

A disjunctive consideration of subjective bad faith and objective unreasonableness as potentially independent bases for fee-shifting is consistent with the copyright rule and pre-Federal Circuit patent precedent. While the factors considered in awarding attorneys' fees in copyright cases vary somewhat from Circuit to Circuit, the courts of appeals uniformly recognize "objective unreasonableness" as to the "legal components of the case" as a factor that can justify the grant of attorneys' fees. *Lieb*, 788 F.2d at 156; *see, e.g.*, *García-Goyco v. Law Envtl. Consultants, Inc.*, 428 F.3d 14, 20 (1st Cir. 2005) ("'objectively weak'" claims can support an award of fees); *Matthew Bender & Co. v. W. Publ'g Co.*, 240 F.3d 116, 121 (2d Cir. 2001) ("'objective unreasonableness'" supports an award of fees); *Diamond Star Bldg. Corp. v. Freed*, 30 F.3d 503, 506 (4th Cir. 1994) (same); *Bridgmon v. Array Sys. Corp.*, 325 F.3d 572, 578 n.9 (5th Cir. 2003) (same); *Bridgeport Music, Inc. v. Rhyme Syndicate Music*, 376 F.3d 615, 626 (6th Cir. 2004) (same); *JCW Invs., Inc. v. Novelty, Inc.*, 509 F.3d 339, 342 (7th Cir. 2007)

(same); *Mary Ellen Enters., Inc. v. Camex, Inc.*, 68 F.3d 1065, 1072 (8th Cir. 1995) (same); *Perfect 10, Inc. v. CCBill LLC*, 488 F.3d 1102, 1120 (9th Cir. 2007) (same); *Palladium Music, Inc. v. EatSleepMusic, Inc.*, 398 F.3d 1193, 1200 (10th Cir. 2005) (same); *MiTek Holdings, Inc. v. Arce Eng'g Co.*, 198 F.3d 840, 842 (11th Cir. 1999) (same). This Court cited that same factor with approval in *Fogerty*. *See* 510 U.S. at 534 n.19. And these courts make no mention of a concomitant bad faith requirement. In fact, many of them expressly disclaim such a requirement. *See, e.g., Latin Am. Music Co. v. Am. Soc'y of Composers, Authors & Publishers (ASCAP)*, 629 F.3d 262, 263 (1st Cir. 2010) (showing of "bad faith is not required"); *Rosciszewski v. Arete Assocs., Inc.*, 1 F.3d 225, 234 (4th Cir. 1993) (absence of "bad faith" not dispositive); *JCW Invs.*, 509 F.3d at 342 (showing of "bad faith is not required"); *MiTek Holdings*, 198 F.3d at 842 (same).

Pre-Federal Circuit § 285 precedent likewise recognized that bad faith alone can support an award of fees. *See, e.g., Colortronic Reinhard & Co., K.G. v. Plastic Controls, Inc.*, 668 F.2d 1, 8 (1st Cir. 1981) ("Attorneys' fees are normally awarded under section 285" where there is "strong evidence of ... bad faith on the part of the losing party."); *Kahn v. Dynamics Corp. of Am.*, 508 F.2d 939, 942 (2d Cir. 1974) (litigating in "bad faith" can support an exceptional case finding); *ADM Corp. v. Speedmaster Packaging Corp.*, 525 F.2d 662, 664 (3d Cir. 1975) (same); *DuBuit v. Harwell Enters., Inc.*, 540 F.2d 690, 694 (4th Cir. 1976) (same); *Eudy v. Motor-Guide, Herschede Hall Clock Co.*, 651 F.2d 299, 305-06 (5th

Cir. 1981) (same); *Deyerle v. Wright Mfg. Co.*, 496 F.2d 45, 54-55 (6th Cir. 1974) (same); *Loctite Corp. v. Fel-Pro, Inc.*, 667 F.2d 577, 584 (7th Cir. 1981) (same); *Square Liner 360°, Inc. v. Chisum*, 691 F.2d 362, 379 (8th Cir. 1982) (same); *Maurice A. Garbell, Inc. v. Boeing Co.*, 546 F.2d 297, 300 (9th Cir. 1976) (a "finding of bad faith is an adequate foundation for deciding that [a] case is exceptional with the meaning of 35 U.S.C. § 285"); *Halliburton Co. v. Dow Chem. Co.*, 514 F.2d 377, 381 (10th Cir. 1975) (litigating in "bad faith" can support an exceptional case finding).

In short, the Federal Circuit's conjunctive rule has no basis in precedent, text, or common sense. This Court should make clear it has no proper place in interpreting § 285.

C. Current Federal Circuit Case Law Tips the Scales in Favor of Patentees, Ignoring the Text of § 285 and This Court's Precedent.

Even beyond unnecessarily requiring both subjective bad faith and objective unreasonableness to support an exceptional case finding, the Federal Circuit has made it unduly difficult for alleged infringers to establish those factors.[3] First, with

---

[3] Patent fees under § 285 were awarded only 23 times (excluding awards in default judgments) between January 1, 2010, and December 31, 2012. When instances of fees being granted due to willfulness or inequitable conduct are removed from this set of cases, fees have only been awarded 6 times during this time period, highlighting the extreme difficulty in satisfying the Federal Circuit's two-part test. *See Trends in Awards of Attorneys' Fees under 35 U.S.C. § 285 between 2003-2005 and 2010-2012*, LexMachina.com (Dec. 9, 2013),

respect to subjective bad faith, the Federal Circuit has adopted "a presumption that an assertion of infringement of a duly granted patent is made in good faith," which makes it very difficult for alleged infringers to establish bad faith. *Medtronic Navigation, Inc. v. BrainLAB Medizinische Computersysteme GmbH*, 603 F.3d 943, 954 (Fed. Cir. 2010). Second, while the Federal Circuit has at times suggested that the "objective[] baseless[ness]" prong of its subjective-objective test requires an assessment of whether a "'reasonable litigant'" could "'expect success on the merits,'" *Dominant Semiconductors Sdn. Bhd. v. OSRAM GmbH*, 524 F.3d 1254, 1260 (Fed. Cir. 2008), it has also applied a higher standard which requires an alleged infringer to establish that a patentee's case has "'no objective foundation,'" *MarcTec, LLC v. Johnson & Johnson*, 664 F.3d 907, 916 (Fed. Cir. 2012).

These standards force alleged infringers to meet a far higher burden than patentees to obtain fees and thus cannot be squared with § 285's text or this Court's precedent. In *Fogerty*, this Court emphasized that when it comes to a grant of attorneys' fees in copyright cases, "[p]revailing plaintiffs and prevailing defendants are to be treated alike." 510 U.S. at 534. The Court explained that "[t]he statutory language ... gives no hint that successful plaintiffs are to be treated differently from successful defendants," and that "[t]he legislative history of § 505 provides no support for treating prevailing

---

https://lexmachina.com/2013/12/trends-in-awards-of-attorneys-fees-under-35-u-s-c-%C2%A7-285-between-2003-2005-and-2010-2012/.

plaintiffs and defendants differently with respect to the recovery of attorney's fees." *Id.* at 522-23.

The same is true of § 285. The provision's text does not distinguish between prevailing plaintiffs and defendants; it is neutral when it comes to patentees and alleged infringers. Indeed, this Court recognized as much in *Fogerty*. *See* 510 U.S. at 525 n.12 ("the federal fee-shifting statutes in the patent and trademark fields, which are more closely related to that of copyright, support a party-neutral approach"); *id.* ("Consistent with the party-neutral language, courts have generally awarded attorney's fees in an evenhanded manner based on the same criteria.").

The Federal Circuit's good faith presumption ensures that patentees have the high ground in clashes over attorneys' fees. No similar presumption protects alleged infringers. And the *MarcTec* standard for objective unreasonableness skews matters even further. Even when an infringement case is based on a truly specious legal theory, it may be impossible for an alleged infringer to establish that the patentee's case has "'no objective foundation.'" *MarcTec*, 664 F.3d at 916. Further, because the standard requires the entire case to lack an objective foundation, patentees can defeat a request for fees if some aspects of their claims have merit, even if the case overall did not. It should be sufficient to demonstrate that a patentee lacks an objectively reasonable prospect of prevailing on his overall claims, even if there is some merit to certain

portions of them.[4]

D. Federal Circuit § 285 Precedent Encourages Frivolous Patent Litigation.

The current patent law landscape makes direction from this Court on attorneys' fees in patent cases absolutely critical. Patent litigation is changing, and not for the better. There has been an explosion in cases alleging patent infringement in the last few years—nearly twice as many infringement suits were filed between January 2011 and December 2012 than were filed between January 2007 and December 2008. *See* Sara Jeruss et al., *The AIA 500 Expanded: The Effects of Patent Monetization Entities* app. A (UC Hastings Research Paper No. 45, 2013). This doubling of suits is not because defendants—most of whom innovate and own substantial patent portfolios—have suddenly become twice as careless about respecting intellectual property rights. Instead, what has changed is not the nature of the accused infringers, but the nature and tactics of the plaintiffs.

As Justice Kennedy presciently explained in his concurrence in *eBay*, 547 U.S. at 396 (Kennedy, J., concurring), "[a]n industry has developed in which firms use patents not as a basis for producing and selling goods but, instead, primarily for obtaining

---

[4] Viewing the question in terms of "objective reasonableness" as opposed to "no objective foundation" is also consistent with the copyright law. *See, e.g., Fogerty*, 510 U.S. at 534 n.19 ("'objective unreasonableness ... in the legal components of the case'" can support an award of fees (quoting *Lieb*, 788 F.2d at 156)).

licensing fees." This industry has flourished in the seven years since *eBay*. Although there may be room for disagreement about what constitutes a patent assertion entity, or PAE, there is no serious dispute that suits filed by PAEs now dominate the patent docket of the federal courts. Between the year *eBay* was decided and 2011, the number of defendants sued by PAEs quadrupled. *Litigations Over Time*, PatentFreedom.com (Aug. 6, 2013), https://www.patentfreedom.com/about-npes/litigations/; *see also* U.S. Gov't Accountability Office, GAO-13-465, Intellectual Property: Assessing Factors That Affect Patent Infringement Litigation Could Help Improve Patent Quality 18-19 (2013), http://www.gao.gov/assets/660/657103.pdf (reporting that the number of defendants sued by PAEs grew from 834 in 2007 to 3,401 in 2011). PAEs now file a majority of all patent infringement suits. *See* Colleen Chien, *Patent Trolls by the Numbers*, Patently-O (Mar. 14, 2013), http://www.patentlyo.com/patent/2013/03/chien-patent-trolls.html.

The increase in PAE suits is not attributable to increased innovation by these entities. The rapid escalation in PAE infringement suits is a function of the business model employed by PAEs. While innovative companies practicing their own patents have built-in disincentives to litigate, such as the potential required disclosure of confidential and trade secret information, and can face negative consequences from unsuccessful litigation, litigation is the business of PAEs. As the White House has recognized, many of these entities routinely file "nuisance suits" based on the assertion of broad and ambiguous patents in an effort to extort the payment

of "licensing fees" or an undeserved settlement. *See* Executive Office of the President, *Patent Assertion and U.S. Innovation* 4 (June 4, 2013). Unfortunately, nuisance suits of this sort "are a daily fact of life for most corporate legal departments," Ranganath Sudarshan, *Nuisance-Value Patent Suits: An Economic Model and Proposal*, 25 Santa Clara Computer & High Tech L.J. 159, 160 (2008), and more often than not these suits are brought against small or medium size defendants such as retailers, grocery stores, and hotels, that are more likely to settle rather than litigate, *see* Sara Jeruss et al., *The America Invents Act 500: Effects of Patent Monetization Entities on US Litigation*, 11 Duke L. & Tech. Rev. 357 (2012); Colleen Chien, *Startups and Patent Trolls*, Santa Clara Law Digital Commons 1-2 (2012) (55% of defendants in PAE suits make under $10 million per year). These suits are designed to leverage the difference between the costs necessary to litigate and the costs of settlement, and generally succeed. Infringement suits filed by PAEs settle 89.6% of the time. John R. Allison et al., *Patent Quality and Settlement Among Repeat Patent Litigants*, 99 Geo. L.J. 677, 694 (2011).[5]

Moreover, patentees that practice their patents face the risk of countersuits and often settle patent disputes through cross-licenses, which "remove blocking positions, facilitate the dissemination of technology, reduce costs by reducing risk and

---

[5] At the same time, when PAEs are forced to litigate a claim to conclusion, they succeed only 8% of the time—one-fifth as often as companies that own and practice their patents. John Allison et al., 99 Geo. L. J. at 693-94.

uncertainty and foster innovation." Google, BlackBerry, Earthlink & Red Hat, *Comments to the Federal Trade Commission and U.S. Department of Justice on Patent Assertion Entities* 11-12 (Apr. 5, 2013). PAEs, on the other hand, are "invulnerable to counter-claims of patent infringement," as they do not make or sell any products. Executive Office of the President, *supra*, at 4.

The growing prevalence of PAE nuisance suits underscores the necessity of a flexible and even-handed approach to exceptional case analysis under 35 U.S.C. § 285. The possibility of an exceptional case finding provides an obvious disincentive for the assertion of dubious patents in hopes that the gap between the defendant's cost of litigation and its cost of settlement will drive settlements and avoid any final determination of the patent's validity. Indeed, since the defendant's relatively high litigation costs are what helps fuel this business model, the possibility of shifting those costs when the defendant prevails creates both appropriate disincentives and the possibility of just deserts. Thus, eliminating the Federal Circuit's thumb on the scale in favor of patentees will not only improve the standard for awarding fees but help rebalance litigation incentives that have produced an explosion of patent litigation.

II. When An Exceptional Case Determination Is Based On The Objective Reasonableness Of A Claim Or Defense, That Determination Is A Question Of Law Reviewable *De Novo*.

As long as objective reasonableness is part of the exceptional case analysis—whether as a stand-alone basis for awarding fees or a component of a two-part

test—that determination should be reviewed *de novo* on appeal.

Under current Federal Circuit precedent, the determination whether to award attorneys' fees is a two-step process. *See, e.g.*, *Wedgetail Ltd. v. Huddleston Deluxe, Inc.*, 576 F.3d 1302, 1304 (Fed. Cir. 2009). First, a court must decide whether a case is "exceptional." *Forest Labs., Inc. v. Abbott Labs.*, 339 F.3d 1324, 1327 (Fed. Cir. 2003). Second, if the case is found exceptional, a court must decide whether to award fees. *Id.* at 1328. This two-part standard tracks the statutory language. *See* 35 U.S.C. § 285 ("The court in exceptional cases may award reasonable attorney fees to the prevailing party.").

Many aspects of a district court's decision to grant or deny attorneys' fees pursuant to § 285 should be reviewed under a deferential standard. As discussed in Part I, the Federal Circuit has already identified a number of circumstances that can support an exceptional case finding: "fraud or inequitable conduct in procuring the patent, misconduct during litigation, vexatious or unjustified litigation, [and] conduct that violates Fed. R. Civ. P. 11" can all support such a finding. *Brooks*, 393 F.3d at 1381. When a district court's exceptional case finding turns on one of those factors, that decision is appropriately reviewed deferentially. The same is true of a bad faith finding and the ultimate decision whether to award fees in the wake of an exceptional case finding, and if so how much to award. But an objective reasonableness determination is different. As long as that determination is a component of a

court's decision to shift fees, the objective reasonableness determination should be treated as a question of law and reviewed *de novo*.

Many of the legal issues that will inform a district court's exceptional case determination based on objective unreasonableness are themselves questions of law. When fees are awarded because of an objectively unreasonable assertion of infringement, that is frequently because the patentee's claim construction lacks merit, and claim construction is a question of law.[6] *See Cybor Corp. v. FAS Techs., Inc.*, 138 F.3d 1448, 1456 (Fed. Cir. 1998) (en banc). And many of the invalidity arguments typically advanced by alleged infringers also involve questions of law. *See, e.g., Merck & Co. v. Teva Pharm. USA, Inc.*, 395 F.3d 1364, 1369 (Fed. Cir. 2005) (obviousness); *Sitrick v. Dreamworks, LLC*, 516 F.3d 993, 999 (Fed. Cir. 2008) (enablement); *Young v. Lumenis, Inc.*, 492 F.3d 1336, 1344 (Fed. Cir. 2007) (definiteness); *Slip Track Sys., Inc. v. Metal-Lite, Inc.*, 304 F.3d 1256, 1262 (Fed. Cir. 2002) (conception). It makes little sense to review a determination that turns on questions of law as anything other than a question of law.

Moreover, questions that require objective assessment are frequently treated as questions of law in other areas. Under the doctrine of qualified immunity, government officials are shielded "'from liability for civil damages insofar as their conduct

---

[6] The Federal Circuit is currently revisiting the claim construction standard of review en banc in *Lighting Ballast Control LLC v. Philips Electronics North America Corp.*, 500 F. App'x 951 (Fed. Cir. 2013).

does not violate clearly established ... rights of which a reasonable person would have known.'" *Pearson v. Callahan*, 555 U.S. 223, 231 (2009). This Court recently reaffirmed that the "reasonable person" portion of the qualified immunity inquiry is based on "objective reasonableness," *Messerschmidt v. Millender*, 132 S. Ct. 1235, 1244-45 (2012), and the Court has suggested that the "objective reasonableness" inquiry is a question of law. *See Scott v. Harris*, 550 U.S. 372, 381 n.8 (2007); *Pitt v. District of Columbia*, 491 F.3d 494, 509-10 (D.C. Cir. 2007) ("whether an objectively reasonable officer would have believed his conduct to be lawful, in light of clearly established law" is a question of law). The courts of appeals recognize that qualified immunity's "objectively reasonable" inquiry requires consideration of a question of law.[7]

Similarly, whether an individual has a "reasonable expectation" of privacy for Fourth Amendment purposes is decided under a subjective-objective test, and the objective component of that test is also regularly treated as a question of law.

---

[7] *See, e.g., Wilson v. City of Boston*, 421 F.3d 45, 53 n.10 (1st Cir. 2005); *Lennon v. Miller*, 66 F.3d 416, 424 (2d Cir. 1995); *Curley v. Klem*, 499 F.3d 199, 211 (3d Cir. 2007); *Cloaninger ex rel. Estate of Cloaninger v. McDevitt*, 555 F.3d 324, 333 (4th Cir. 2009); *Colston v. Barnhart*, 146 F.3d 282, 285 n.2 (5th Cir. 1998); *Champion v. Outlook Nashville, Inc.*, 380 F.3d 893, 900-01 (6th Cir. 2004); *Riccardo v. Rausch*, 375 F.3d 521, 526 (7th Cir. 2004); *Engleman v. Deputy Murray*, 546 F.3d 944, 946-47 (8th Cir. 2008); *Rodriguez v. Maricopa Cnty. Comty. Coll. Dist.*, 605 F.3d 703, 707 (9th Cir. 2010); *Gonzales v. Duran*, 590 F.3d 855, 864 (10th Cir. 2009); *Johnson v. City of Fort Lauderdale, Fla.*, 126 F.3d 1372, 1378 n.7 (11th Cir. 1997).

United States v. Nerber, 222 F.3d 597, 599 (9th Cir. 2000) ("Whether a citizen's expectation of privacy was objectively reasonable is a question of law reviewed de novo."); *United States v. Garzon*, 119 F.3d 1446, 1449 (10th Cir. 1997) ("[A] determination of whether the defendant retained an objectively reasonable expectation of privacy ... is a question of law that we review *de novo*."); *United States v. Welliver*, 976 F.2d 1148, 1151 (8th Cir. 1992) (Whether a "subjective expectation" of privacy "is objectively reasonable" is "a question of law."). And the objective component of the *Noerr-Pennington* sham litigation test is a question of law as well. *See PRE*, 508 U.S. at 59. That objective questions are viewed as questions of law subject to *de novo* review outside patent law strongly counsels in favor of such treatment here. *Cf. eBay*, 547 U.S. at 391 ("These familiar principles apply with equal force to disputes arising under the Patent Act.").[8]

Pierce v. Underwood, 487 U.S. 552 (1988), which applied a deferential standard to fees awarded under the Equal Access to Justice Act ("EAJA"), does not suggest a different result. There, the Court identified several factors to be considered in deciding the appropriate standard of appellate review. First, the Court noted that in some instances, "the decision 'has turned on a determination that, as a matter of

---

[8] Subjecting an exceptional case determination based on objective unreasonableness to *de novo* review is also consistent with the practice of at least some of the courts of appeals in copyright cases. *See, e.g., Diamond Star*, 30 F.3d at 506 (if a fee award is based "'on a legal precept, our review is plenary'"); *Lieb*, 788 F.2d at 154 (same).

the sound administration of justice, one judicial actor is better positioned than another to decide the issue in question.'" *Id.* at 559-60 (quoting *Miller v. Fenton*, 474 U.S. 104, 114 (1985)). Second, the Court pointed to concerns about whether too searching a standard of review would result in an unnecessary expenditure of scarce appellate resources. *Id.* at 560. Third, the Court recognized the importance of giving the district court the necessary flexibility to resolve questions concerning "'multifarious, fleeting, special, narrow facts that utterly resist generalization.'" *Id.* at 561-62. Finally, the Court explained that when a district court's treatment of an issue has substantial consequences—monetary and otherwise—that issue should likely be "reviewed more intensively." *Id.* at 563.

All of the *Pierce* factors counsel in favor of *de novo* review when the objective reasonableness of a patent law claim or defense is at issue. While not uniquely qualified to define the scope of § 285, the Federal Circuit is undoubtedly "better positioned" than the district courts to decide whether a particular infringement claim or defense is objectively unreasonable. The Federal Circuit's relative expertise in patent cases is its *raison d'etre*, and this expertise is reinforced by the reality that the Federal Circuit reviews a steady stream of patent cases, whereas most district courts handle patent cases only episodically. Second, the difference in appellate resources used to review a patent claim or defense under a deferential or *de novo* standard as to its objective reasonableness is likely minimal (if any difference exists at all). Appeals of awards or denials of attorneys' fees almost always accompany, or follow

directly on the heels of, a related merits appeal. *See, e.g., Meyer Intellectual Props. Ltd. v. Bodum, Inc.*, 690 F.3d 1354 (Fed. Cir. 2012); *Bard Peripheral Vascular, Inc. v. W.L. Gore & Assocs., Inc.*, 670 F.3d 1171 (Fed. Cir. 2012), *vacated in part on reh'g en banc*, 476 F. App'x 747; *i4i Ltd. P'ship v. Microsoft Corp.*, 598 F.3d 831 (Fed. Cir. 2010); *ICU Med., Inc. v. Alaris Med. Sys., Inc.*, 558 F.3d 1368 (Fed. Cir. 2009). Thus the Federal Circuit will be obligated to conduct a searching review of the theories of infringement and relevant defenses irrespective of the § 285 standard. And *de novo* review of whether claims and defenses are objectively reasonable in no way limits the flexibility of a district court in addressing "multifarious, fleeting" conduct. As already discussed, discretionary judgments about litigation misconduct should be subjected to deferential review on appeal, but objective reasonableness determinations are different. Finally, lest there be any doubt, the stakes are high—often tens of millions of dollars—in patent cases involving attorneys' fees, and orders of magnitude higher than in the EAJA cases at issue in *Pierce*.[9] Accordingly, any argument that *Pierce* mandates deferential review of exceptional case determinations based on objectively unreasonable

---

[9] *See, e.g., Bard*, 670 F.3d at 1178 ($19 million); *MarcTec*, 664 F.3d at 922 ($4.6 million); *Lazare Kaplan Int'l, Inc. v. Photoscribe Techs., Inc.*, 628 F.3d 1359, 1366 (Fed. Cir. 2010) ($6 million); *Takeda Chem. Indus., Ltd. v. Mylan Labs, Inc.*, 549 F.3d 1381, 1385 (Fed. Cir. 2008) ($16.8 million); *Powell v. Home Depot U.S.A., Inc.*, 663 F.3d 1221, 1228 (Fed. Cir. 2011) ($2.8 million); *Monolithic Power Sys., Inc. v. O2 Micro Int'l Ltd.*, 726 F.2d 1359, 1365 (Fed. Cir. 2013) ($8.4 million).

claims or defenses is exactly backwards.

The Court's decision in *Cooter & Gell v. Hartmax Corp.*, 496 U.S. 384 (1990), does not command a different result. *Cooter* held that "an appellate court should apply an abuse-of-discretion standard in reviewing all aspects of a district court's Rule 11 determination." *Id.* at 405. But the *Cooter* Court's reasoning for deferring to district courts' Rule 11 determinations is inapplicable to attorneys' fee awards based on objectively unreasonable claims and defenses in patent cases. The *Cooter* Court noted the "difficulty of distinguishing between legal and factual issues" "in the Rule 11 context." *Id.* at 401. Distinguishing between issues of fact and law under the appropriate § 285 standard is not difficult at all. Questions that run to the objective reasonableness of a claim or defense should be viewed as questions of law. The remaining potential reasons for deeming a case exceptional, such as "fraud or inequitable conduct in procuring the patent, misconduct during litigation, [and] vexatious or unjustified litigation," *Brooks*, 393 F.3d at 1381, the ultimate decision whether to award fees, and how much to award, can all be treated as questions subject to deferential review.

The *Cooter* Court also stated that deferential review of Rule 11 sanctions was warranted because "[t]he district court is best acquainted with the local bar's litigation practices and thus best situated to determine when a sanction is warranted to serve Rule 11's goal of specific and general deterrence." 496 U.S. at 404. That concern is addressed under the appropriate § 285 standard by subjecting fee awards

flowing from general litigation misconduct to deferential review. And, unlike Rule 11, the objective component of an exceptional case determination is an area where the Federal Circuit's "review of whether a legal position was reasonable" actually "is []likely to establish clear guidelines for lower courts" and "clarify the underlying principles of law." *Id.* at 405. Except in the rare cases where this Court opts to get involved, the Federal Circuit has a congressionally-granted monopoly on judicial standard setting in patent law. *See Markman v. Westview Instruments, Inc.*, 517 U.S. 370, 390 (1996) ("Congress created the Court of Appeals for the Federal Circuit as an exclusive appellate court for patent cases, observing that increased uniformity would strengthen the United States patent system in such a way as to foster technological growth and industrial innovation." (citation and internal quotation marks omitted)). Questions about the objective unreasonableness of a claim or defense will inform not only future litigation choices and fee determinations, but also the law of claim construction and patent validity more broadly.[10]

III. The Standard Of Review This Court Adopts For Exceptional Case Determinations Should Not Impact The Standard Of Review For Willful Infringement Findings.

No matter what standard or standard of review

---

[10] *Cooter* also reviewed the *Pierce* factors and concluded that those factors counseled in favor of abuse-of-discretion review of Rule 11 findings. As explained, the *Pierce* factors decisively counsel in favor of *de novo* review of the objective reasonableness of a claim or defense in patent cases.

the Court adopts for exceptional case determinations and attorneys' fee awards under § 285, it should make plain that its holding does not implicate the distinct and critical question of the standard of review for enhanced damages due to willful infringement under 35 U.S.C. § 284. The Federal Circuit recently has helpfully clarified that the objective component of a willful infringement finding should be reviewed *de novo*. *See Bard Peripheral Vascular, Inc. v. W.L. Gore & Assocs., Inc.*, 682 F.3d 1003, 1005 (Fed. Cir. 2012). Whatever this Court decides about the § 285 questions, it should make clear that it has no necessary consequence for the standard of review in the distinct willful infringement context. Indeed, a decision that inadvertently caused the Federal Circuit to reconsider *Bard* could exacerbate the litigation incentives of PAEs and further tilt the playing field in favor of patentees.

A finding of willful infringement can have financial consequences that go well beyond a shifting of fees. *See* 35 U.S.C. § 284 ("the court may increase the damages up to three times the amount found or assessed"). To establish willful infringement, a patentee must establish "that the infringer acted despite an objectively high likelihood that its actions constituted infringement of a valid patent." *In re Seagate Tech., LLC*, 497 F.3d 1360, 1371 (Fed. Cir. 2007) (en banc). Once that "threshold objective standard is satisfied, the patentee must also demonstrate that this objectively-defined risk ... was either known or so obvious that it should have been known to the accused infringer." *Id.* In recognition of the fact that "the court is in the best position" to

make the "threshold determination of objective recklessness," the Federal Circuit in *Bard* helpfully clarified that the objective prong of the willful infringement test "is best decided by the judge as a question of law subject to *de novo* review." *Bard*, 682 F.3d at 1006-07; *see id.* at 1008 ("[T]he ultimate question of whether a reasonable person would have considered there to be a high likelihood of infringement of a valid patent should always be decided as a matter of law by the judge.").

This Court should thus be explicit that any ruling on the appropriate standard or standard of review for § 285 fees should not be interpreted to apply in the arena of willful infringement. Absent direction from this Court, there is a very real danger that the Federal Circuit will translate this Court's holding in *Highmark* to the very different trebled damages/willful infringement context. The Federal Circuit has held that "the standard for showing objective baselessness for purposes of § 285" is "'identical to the objective recklessness standard for enhanced damages ... against an accused infringer for § 284 willful infringement actions.'" *Bard*, 682 F.3d at 1007 (quoting *iLor, LLC v. Google, Inc.*, 631 F.3d 1372, 1377 (Fed. Cir. 2011)). And the Federal Circuit cited *Bard* in its decision in *Highmark*. *See* Pet. App. 9a.

If this Court holds that all components of a § 285 fee determination—including objective reasonableness—are to be reviewed under a deferential standard, the Court should make clear that its reasoning turns on the uniquely discretionary nature of attorneys' fees

determinations and has no necessary consequences for the very different treble damages context of § 284. As discussed, legal doctrines that turn on objective assessments are typically treated as questions of law and subject to *de novo* review. If there is any basis to depart from that general rule in the fee-shifting context, it would necessarily flow from the notion that a fee-shifting determination is inherently discretionary and within the district court's equitable powers. *See, e.g.*, *F.D. Rich*, 417 U.S. at 130 (the Court has "long recognized that attorneys' fees may be awarded to a successful party when his opponent has acted in bad faith"); *Vaughan*, 369 U.S. at 530 (the "allowance of counsel fees" is "'part of the historic equity jurisdiction of the federal courts'"). If the Court were to reach that conclusion, it should make clear that its reasoning does not extend to other contexts, including the willfulness context. After all, district courts do not have the discretion to treble damages as they see fit in the absence of a statutory provision endowing them with that extraordinary power.

Equally important, the textual sources, functions, and practical consequences of attorneys' fees and trebling damages are not the same. Attorneys' fees and willful infringement sanctions often serve very different ends and have highly disparate effects. While the treble damages that follow a willful infringement finding are meant to serve a punitive function and raise distinct concerns about overdeterring legitimate conduct, § 285's primary aim is to "compensat[e] ... the prevailing party for its monetary outlays in the prosecution or defense of the suit." *Raylon, LLC v. Complus Data*

Innovations, Inc., 700 F.3d 1361, 1373 (Fed. Cir. 2012) (Reyna, J., concurring). Furthermore, while there are eye-popping figures involved in attorneys' fees litigation in patent cases, those figures often pale in comparison with treble damages figures, which can reach into the hundreds of millions. *See, e.g.*, *Bard*, 670 F.3d at 1178 (district court awarded $185 million for willful infringement). And, as this Court noted in *Pierce*, when a district court's disposition of an issue has substantial monetary consequences, that issue should be "reviewed more intensively." 487 U.S. at 563.

CONCLUSION

For the reasons set forth above, in *Octane Fitness*, this Court should hold that when district courts conduct exceptional case analysis under 35 U.S.C. § 285: (1) there is no precise formula for determining what constitutes an exceptional case; (2) in the absence of a single factor that supports an exceptional case finding, courts should assess whether a litigant's conduct viewed in its entirety makes a case exceptional; (3) bringing a suit in subjective bad faith and lodging an objectively unreasonable infringement allegation each can individually warrant an exceptional case finding; (4) patentees do not benefit from a presumption that infringement allegations are made in good faith; and (5) an alleged infringer need only show that a patentee's claims had no reasonable prospect of success—as opposed to "no objective foundation"—when arguing that a patentee's conduct makes a case exceptional.

In *Highmark*, this Court should hold that when an exceptional case determination is based on the objective reasonableness of a claim or defense, that determination is a question of law reviewable *de novo*. In the alternative, if this Court holds that all components of a § 285 fee determination are to be reviewed under a deferential standard, the Court should make clear that its reasoning does not extend beyond the unique context of attorneys' fees determinations.

Respectfully submitted,

PAUL D. CLEMENT
Counsel of Record
D. ZACHARY HUDSON
BANCROFT PLLC
1919 M Street NW
Suite 470
Washington, DC 20036
(202) 234-0090
pclement@bancroftpllc.com

Counsel for Amici Curiae

December 9, 2013

AMICUS CURIAE BRIEF

No. 12-1163

SUPREME COURT, U.S.
FILED
JAN 24 2014
OFFICE OF THE CLERK

IN THE

Supreme Court of the United States

HIGHMARK INC.,

Petitioner,

v.

ALLCARE HEALTH MANAGEMENT SYSTEM, INC.,

Respondent.

ON WRIT OF CERTIORARI TO THE UNITED STATES COURT OF APPEALS FOR THE FEDERAL CIRCUIT

BRIEF OF *AMICUS CURIAE* INTELLECTUAL PROPERTY OWNERS ASSOCIATION IN SUPPORT OF RESPONDENT

Of Counsel:

PHILIP S. JOHNSON, *President*
KEVIN H. RHODES,
Chair, Amicus Brief Committee
INTELLECTUAL PROPERTY OWNERS ASSOCIATION
1501 M Street, NW, Suite 1150
Washington, DC 20005
(202) 507-4500

PAUL H. BERGHOFF
Counsel of Record
ERIN R. WOELKER
MCDONNELL BOEHNEN HULBERT & BERGHOFF LLP
300 South Wacker Drive
Chicago, Illinois 60606
(312) 913-0001
berghoff@mbhb.com

Counsel for Amicus Curiae

250480

COUNSEL PRESS
(800) 274-3321 • (800) 359-6859

TABLE OF CONTENTS

Page

TABLE OF CONTENTS.....i

TABLE OF CITED AUTHORITIES ii

INTEREST OF *AMICUS CURIAE* 1

SUMMARY OF ARGUMENT.....2

ARGUMENT.....5

I. Whether a Claim is "Objectively Reasonable" Presents a Question of Law That Warrants *De Novo* Review.....5

II. Factors Considered By the Supreme Court in Determining Which Standard of Review to Apply Weigh in Favor of *De Novo* Review.....7

III. The Supreme Court Reviews a Trial Court's Application of Comparable Objective Tests *De Novo* 10

CONCLUSION 13

APPENDIX.....1a

TABLE OF CITED AUTHORITIES

Page

CASES

Bard Peripheral Vascular, Inc. v. W.L. Gore & Associates, Inc., 682 F.3d 1003 (Fed. Cir. 2012) 6

Beckman Instruments, Inc. v. LKB Produkter AB, 892 F.2d 1547 (Fed. Cir. 1989) 2

Brooks Furniture Mfg., Inc. v. Dutailier Int'l, Inc., 393 F.3d 1378 (Fed. Cir. 2005) 2, 3, 8

Brown v. Allen, 344 U.S. 443 (1953).....5

Dominant Semiconductors Sdn. Bhd. v. OSRAM GmbH, 524 F.3d 1254 (Fed. Cir. 2008) 3

Forest Labs., Inc. v. Abbott Labs., 39 F.3d 1324 (Fed. Cir. 2003) 3

Highmark, Inc. v. Allcare Health Management Systems, Inc., 687 F.3d 1300 (2012)..... *passim*

iLOR, LLC v. Google, Inc., 631 F.3d 1372 (Fed. Cir. 2011).....2-3, 8

Cited Authorities

Page

Miller v. Fenton,
474 U.S. 104 (1985) 5, 6, 7, 11

Old Reliable Wholesale, Inc. v. Cornell Corp.,
635 F.3d 539 (Fed. Cir. 2011) 2, 3

Ornelas v. U.S.,
517 U.S. 690 (1996) 8, 9, 11

Pierce v. Underwood,
487 U.S. 552 (1987) 10

Powell v. Home Depot U.S.A., Inc.,
663 F.3d 1221 (Fed. Cir. 2011) 3

Professional Real Estate Investors v. Columbia Pictures Industries, Inc.,
508 U.S. 49 (1993) 6, 10, 11

Salve Regina College v. Russell,
499 U.S. 225 (1991) 7

Scott v. Harris,
550 U.S. 372 (2007) 11

Standard Oil Co. v. American Cyanamid Co.,
774 F.2d 448 (Fed. Cir. 1985) 2

Stewart v. Sonneborn,
98 U.S. 187 (1878) 12

Cited Authorities

Page

Strickland v. Washington,
466 U.S. 668 (1984) 11

Sumner v. Mata,
455 U.S. 591 (1982) 6

Thompson v. Keohane,
516 U.S. 99 (1995) 5, 6, 8, 11

Townsend v. Sain,
372 U.S. 293 (1963) 5

STATUTES

35 U.S.C. § 285 ..... *passim*

OTHER AUTHORITIES

Daniel J. Meador, *et al.*, APPELLATE COURTS
(2d ed. 2006) 4

Paul. D. Carrington, Daniel J. Meador & Maurice
Rosenberg, JUSTICE ON APPEAL (1976) 4

Roscoe Pound, APPELLATE PROCEDURE IN CIVIL
CASES (1941) 4

INTEREST OF *AMICUS CURIAE*

Amicus curiae Intellectual Property Owners Association (IPO) is a trade association representing companies and individuals in all industries and fields of technology who own or are interested in U.S. intellectual property rights.[1] IPO's membership includes more than 200 companies and a total of over 12,000 individuals who are involved in the association either through their companies or as inventor, author, executive, law firm, or attorney members. Founded in 1972, IPO represents the interests of all owners of intellectual property. IPO regularly represents the interests of its members before Congress and the USPTO and has filed amicus curiae briefs in this Court and other courts on significant issues of intellectual property law. The members of IPO's Board of Directors, which approved the filing of this brief, are listed in the appendix.[2]

IPO submits this brief in support of the Respondent in light of the importance of deterring abusive patent litigation and harmonizing the interpretation of the "exceptional case" standard with respect to baseless litigation positions at the district court level. In *Highmark, Inc. v. Allcare Health Management Systems, Inc.*, 687

---

1. No counsel for a party authored this brief in whole or in part, and no such counsel or party made a monetary contribution intended to fund the preparation or submission of this brief. No person other than the *Amicus Curiae* or its counsel made a monetary contribution to its preparation or submission. The parties have consented to the filing of this brief.

2. IPO procedures require approval of positions in briefs by a two-thirds majority of directors present and voting.

F.3d 1300 (2012), the Federal Circuit properly reviewed *de novo* the district court's assessment of whether the nonprevailing plaintiff's claims were "objectively reasonable." Because the determination of whether a party's litigation positions in a patent case were objectively reasonable is most properly characterized as a question of law, or in some cases a mixed question of fact and law, it should be subject to *de novo* review on appeal. IPO supports the review of the "objective baselessness" or "objective unreasonableness"[3] inquiry consistent with traditional standards of review and in a manner that will promote uniformity among the district courts in the award of fees in cases of meritless litigation.

SUMMARY OF ARGUMENT

The Patent Act provides that the court in "exceptional cases may award reasonable attorney fees to the prevailing party." 35 U.S.C. § 285. Various types of conduct can form the basis for a finding of exceptional case, including willful infringement, inequitable conduct before the United States Patent and Trademark Office, misconduct during litigation, vexatious or unjustified litigation, and taking or maintaining positions in litigation that are "objectively unreasonable." *Beckman Instruments, Inc. v. LKB Produkter AB*, 892 F.2d 1547, 1551 (Fed. Cir. 1989) (citing *Standard Oil Co. v. American Cyanamid Co.*, 774 F.2d 448, 455 (Fed. Cir. 1985)); *see, also, Brooks Furniture Mfg., Inc. v. Dutailier Int'l, Inc.*, 393 F.3d 1378, 1381 (Fed.Cir.2005); *Old Reliable Wholesale, Inc. v. Cornell Corp.*, 635 F.3d 539, 543–44 (Fed. Cir. 2011); *iLOR, LLC*

3. The terms "baseless" and "unreasonable" are used interchangeably in this brief.

v. Google, Inc., 631 F.3d 1372, 1377 (Fed. Cir. 2011). This Court has yet to interpret the "exceptional case" language of Section 285.

In the context of frivolous or meritless litigation positions, the Federal Circuit requires that the position(s) of the sanctioned party be "objectively unreasonable" or baseless to support an exceptional case finding.[4] *See, e.g.*, *Brooks Furniture*, 393 F.3d at 1381; *Old Reliable*, 635 F.3d at 543-44; *iLOR*, 631 F.3d at 1377. "To be objectively baseless, the [litigation positions] must be such that no reasonable litigant could reasonably expect success on the merits." *Dominant Semiconductors Sdn. Bhd. v. OSRAM GmbH*, 524 F.3d 1254, 1260 (Fed. Cir. 2008) (internal quotation marks omitted). As properly applied by the Federal Circuit in *Highmark*, the question of whether a claim or defense is objectively unreasonable is one of law, based on underlying mixed questions of law and fact, and, therefore, should be reviewed *de novo*. Findings as to subjective bad faith, on the other hand, are purely factual and should be reviewed for clear error. *See Forest Labs., Inc. v. Abbott Labs.*, 339 F.3d 1324, 1328 (Fed. Cir. 2003); *see also Powell v. Home Depot U.S.A., Inc.*, 663 F.3d 1221, 1236 (Fed. Cir. 2011).

Generally, appellate courts serve two primary institutional functions—the correction of error in the

---

4. In addition, the Federal Circuit currently requires a showing that the litigation positions were asserted in subjective bad faith. The issue of whether, in the context of positions taken in litigation, the prevailing party must prove both "objective baselessness" and "subjective bad faith" is presently before this Court in *Octane Fitness, LLC v. Icon Health & Fitness, Inc.*, No 12-1184. IPO has also submitted a brief as *Amicus Curiae* in that case.

initial proceedings and the development of the law. *See, e.g.*, DANIEL J. MEADOR ET AL., APPELLATE COURTS 1040–50 (2d ed. 2006); PAUL. D. CARRINGTON, DANIEL J. MEADOR & MAURICE ROSENBERG, JUSTICE ON APPEAL 2 (1976). *De novo* review plays a critical role in performing these functions by allowing an appellate court to ensure that a case before it was decided in a manner consistent with past cases. By giving the appellate court full authority to police the trial court's interpretation and implementation of the legal standards involved, *de novo* review ensures that, among other things, the same legal standard is being applied in every case to which it is relevant. By correcting trial court errors and harmonizing the law of its jurisdiction, an appellate court may promote fair treatment of litigants and predictability of outcome at the trial level and foster an environment in which fewer errors are committed in the first instance. *See* ROSCOE POUND, APPELLATE PROCEDURE IN CIVIL CASES 3 (1941) ("That hasty, unfair or erroneous action may be reversed by a court of review holds back the impulsive, impels caution, constrains fairness and moves tribunals to keep to the best of their ability in the straight path.").

IPO believes that the question of "objective reasonableness" is best served by a *de novo* standard of review. Plenary review is most appropriate for questions of law such as this because it serves to promote fairness and consistency in the application of the test for what are "objectively baseless" litigation positions that support a finding of an "exceptional case" under 35 U.S.C. § 285. Such consistent application of Section 285 by the lower courts should, in turn, deter abusive litigation practices from the outset. Accordingly, the determination of whether a claim was "objectively reasonable" for the purposes of

an exceptional case finding under 35 U.S.C. § 285 should be reviewed *de novo*.

ARGUMENT

I. Whether a Claim is "Objectively Reasonable" Presents a Question of Law That Warrants *De Novo* Review

The appropriate standard of review to apply to an issue on appeal often turns on the type of underlying inquiry—is it one of fact, law, both? On one end of the spectrum, questions of fact involve the determination of the "basic, primary, or historical facts: facts 'in the sense of a recital of external events and the credibility of their narrators.'" *Townsend v. Sain*, 372 U.S. 293, 309, n. 6 (1963) (quoting *Brown v. Allen*, 344 U.S. 443, 506, 73 S.Ct. 437 (1953) (opinion of Frankfurter, J.)). Where the inquiry involves the content or interpretation of a legal rule or the determination of whether a legal rule is met, it is deemed a "question of law." *See, e.g., Miller v. Fenton*, 474 U.S. 104, 114-115 (1985) (identifying evaluation of a "pristine legal standard" or the "ultimate question" under the law, e.g., admissibility of a confession, as questions of law); *see also Thompson v. Keohane*, 516 U.S. 99, 112 (1995) (identifying "the ultimate 'in custody' determination for *Miranda* purposes" as a question of law). A "mixed question of law and fact," lying somewhere in the middle, is often characterized as a question about whether certain agreed upon facts meet a legal standard. *Thompson*, 516 U.S. at 111-13.

Questions of law, and mixed questions of law and fact, have historically been reviewed *de novo* on appeal. *See,*

e.g., *Id.* at 113; *Sumner v. Mata*, 455 U.S. 591, 597 (1982) *(per curiam)* ("[T]he constitutionality of the pretrial identification procedures used in this case is a mixed question of law and fact" reviewed without deference.) [5] The question of "objective unreasonableness" in the exceptional case inquiry will often present a pure question of law or, at most, a mixed question of law and fact. While some degree of factual inquiry may be required, the reasonableness of a nonprevailing party's litigation positions will ultimately turn on the legal merits of the underlying claims, defenses and legal theories. *See, e.g.*, *Professional Real Estate Investors v. Columbia Pictures Industries, Inc.*, 508 U.S. 49, 60 (1993) (holding that, to be considered "sham," "a lawsuit must be objectively baseless in the sense that no reasonable litigant could realistically expect success on the merits"); *Bard Peripheral Vascular, Inc. v. W.L. Gore & Associates, Inc.*, 682 F.3d 1003, 1006 (Fed. Cir. 2012) (holding that the threshold test for "objective recklessness" in the context of enhanced damages "entails an objective assessment of potential defenses based on the risk presented by the patent"); *see also Miller*, 474 U.S. at 115 (considering "the nature of the inquiry itself" in concluding that the voluntariness of a confession merits plenary review on appeal). Accordingly, the ultimate question of whether a non-prevailing party's litigation positions were "objectively reasonable" should be reviewed without deference.

---

5. Though the ultimate holding of "objective unreasonableness" should be reviewed *de novo* on appeal, that holding may be based on underlying findings of the fact by the district court. Those underlying factual findings should be accorded appropriate deference. Similarly, IPO recognizes that other factors and conduct that may be relevant in the "exceptional case" analysis can be more (or purely) factual in nature (for example, litigation misconduct) and therefore should be subject to a higher standard of review.

II. Factors Considered By the Supreme Court in Determining Which Standard of Review to Apply Weigh in Favor of *De Novo* Review

The inherent difficulty in distinguishing questions of law and questions of fact and, in turn, determining the proper standard of appellate review has been recognized by this Court. *See, e.g., Miller*, 474 U.S. at 113 ("In the § 2254(d) context, as elsewhere, the appropriate methodology for distinguishing questions of fact from questions of law has been, to say the least, elusive."). Several factors have been employed by the Court in determining which standard of review to apply to a particular issue.

Often, determination of the applicable standard of review has turned on whether "one judicial actor is better positioned than another to decide the issue in question." *Id.* at 114. For example, where the issue "involves the credibility of witnesses" and "turns largely on an evaluation of demeanor," the trial court, who views the presentation of evidence firsthand, is considered to be better suited to make such evaluations and is, therefore, afforded a level of deference on appeal. *Id.*; *Salve Regina College v. Russell*, 499 U.S. 225, 233 (1991) (explaining that a "deferential review of mixed questions of law and fact is warranted when it appears that the district court is better positioned than the appellate court to decide the issue in question or that probing appellate scrutiny will not contribute to the clarity of legal doctrine") (internal citations omitted). In reviewing the "objective reasonableness" of the legal merits of a party's litigation positions on appeal, the district court is not in a superior position to the appellate court. In this inquiry, the factual record is already set and the issue turns on whether the

record established in the proceeding supports a reasonable argument as to the facts and law. *See Thompson*, 516 U.S. at 114-15 (concluding that "once the historical facts are resolved" the lower court is not "in an appreciably better position" than the reviewing court to make the ultimate legal determination); *iLOR*, 631 F.3d at 1377-78 ("The existence of objective baselessness is to be determined based on the record ultimately made in the infringement proceedings.") (citing *Brooks Furniture*, 393 F.3d at 1382.) Indeed, because the Federal Circuit "sees far more patent cases than any district court," the Federal Circuit is better positioned than the district courts "to recognize those 'exceptional' cases in which a litigant could not, under the law, have had a reasonable expectation of success." *Highmark*, 687 F.3d at 1356.

Furthermore, *de novo* review will also promote consistency in application of the objective test among the trial courts. *De novo* review guards against having the same legal arguments interpreted differently in different trial courts by allowing an appellate court to ensure that the case under review was decided in a manner consistent with past cases. It would be undesirable for legal arguments to be "objectively unreasonable" before one trial court, yet "objectively reasonable" in another.

In *Ornelas v. United States.*, 517 U.S. 690 (1996), in the context of reviewing a probable-cause or reasonable suspicion determination under the Fourth Amendment, this Court explained:

> A policy of sweeping deference would permit, "[i]n the absence of any significant difference in the facts," "the Fourth Amendment's incidence

> [to] tur[n] on whether different trial judges draw ·neral conclusions that the facts are sufficient ·nsufficient to constitute probable cause." Such varied results would be inconsistent with the idea of a unitary system of law. This, if a matter-of-course, would be unacceptable.

Id. at 697 (internal citations omitted).

Further, a clear and consistent application of the "objective unreasonableness" test, as promoted by *de novo* review, will inform litigants going forward of the types of legal claims and defenses that warrant an award of fees under Section 285, thereby allowing them to formulate their litigation positions accordingly. Providing the clarity necessary for parties to correct their conduct, by dropping frivolous claims or defenses or choosing not to assert them in the first instance, strongly serves the goal of deterring abusive patent litigation.

Continuing *de novo* review of objective unreasonableness by the Federal Circuit will not waste judicial energy. In evaluating "objective reasonableness," as mentioned above, the factual record is already set. The "objective" prong is a "single backwards looking inquiry into the reasonableness of the claims in light of the full record." *Highmark*, 687 F.3d at 310-11. Further, before turning to the issue of attorneys' fees under Section 285 and the "objective reasonableness" of the nonprevailing party's claim, the appeals court will likely have already undertaken a review of the merits of the case on appeal. It will not require significant energy for an appellate panel that has already addressed the merits to then determine if, under the correct law, a litigant asserted an objectively

unreasonable position. Thus, the concern expressed by the Court in *Pierce v. Underwood*, 487 U.S. 552 (1987), regarding "the investment of appellate energy" in *de novo* review is significantly mitigated. *Id.* at 561.

Last, this Court has recognized that where a "substantial amount of the liability" is at stake, a higher standard of review may be appropriate. *Id.* at 563. The Court in *Pierce* recognized that large fee awards "militat[ed] against" an abuse of discretion standard, noting that "[i]f this were the sort of decision that ordinarily has such substantial consequences, one might expect it to be reviewed more intensively." The higher attorney fees generally associated with patent litigation likewise supports a higher level of appellate scrutiny.

Taking all of these factors into account, IPO believes that *de novo* review is the appropriate standard for reviewing a district court's determination of whether a non-prevailing party's litigation positions were "objectively unreasonable" as part of the exceptional case inquiry.

III. The Supreme Court Reviews a Trial Court's Application of Comparable Objective Tests *De Novo*

De novo review of a district court's "objectively unreasonable" determination in the context of Section 285 of the Patent Act is consistent with this Court's treatment of similar objective tests in other areas of law. For example, in *Professional Real Estate Investors v. Columbia Pictures Industries, Inc.*, this Court held that whether a lawsuit is "objectively baseless" for the purposes of the sham litigation inquiry under the *Noerr-Pennington* doctrine is a legal question to be reviewed *de novo*. 508

U.S. at 63, 67. To be considered "sham," "a lawsuit must be objectively baseless in the sense that no reasonable litigant could realistically expect success on the merits." *Id.* at 60. The Court analogized the "objective baselessness" test in the context of the sham litigation inquiry to the fundamental legal question of whether a plaintiff had "probable cause" to institute civil legal proceedings. *Id.* at 62-63. In like manner, whether a claim or defense is "objectively unreasonable" or "objectively baseless" for the purposes of an exceptional case inquiry is a question of law subject to *de novo* review.

The questions of the "voluntariness" of a confession, whether a "reasonable person" in the suspect's position would have considered himself "in custody" for *Miranda* purposes, the "effectiveness" of counsel's assistance, and the "reasonableness" of a police officer's actions have all been deemed questions of law subject to plenary review on appeal. *See Miller,* 474 U.S. at 116 (reviewing the voluntariness of a confession without deference); *Thompson*, 516 U.S. at 111-13 (reviewing "reasonable person" standard in context of an "in custody" determination for *Miranda* purposes without deference); *Strickland v. Washington,* 466 U.S. 668, 698 (1984) (reviewing the effectiveness of counsel's assistance without deference); *Scott v. Harris*, 550 U.S. 372, 381 n. 8 (2007) (finding that once the relevant facts are determined and inferences drawn "in favor of the nonmoving party to the extent supportable by the record, the reasonableness of Scott's actions . . . is a pure question of law"). The existence of probable cause is also considered a purely legal question subject to *de novo* review. *See, e.g., Ornelas v. U.S.*, 517 U.S. at 699 ("We therefore hold that as a general matter determinations of reasonable suspicion and probable

cause should be reviewed *de novo* on appeal."); *Stewart v. Sonneborn*, 98 U.S. 187, 194 (1878) ("[P]robable cause is a question of law in a very important sense.... Whether the circumstances alleged to show it probable are true, and existed, is a matter of fact; but whether, supposing them to be true, they amount to a probable cause, is a question of law.") (internal quotation marks omitted).

Consistent with this Court's precedent regarding similar objective standards, a trial court's determination of the "objectively unreasonable" inquiry under Section 285 should be reviewed *de novo*.

CONCLUSION

IPO urges the Court to affirm the Federal Circuit's decision in *Highmark* below. The very "nature of the inquiry itself" supports that "objective unreasonableness" is a legal question appropriate for *de novo* review. This is especially true because the Federal Circuit sits in a unique position to bring uniformity to the determination of whether a party's claims or defenses in a patent litigation were objectively reasonable or not.

Respectfully Submitted,

Of Counsel:

PHILIP S. JOHNSON, *President*
KEVIN H. RHODES,
Chair, Amicus Brief Committee
INTELLECTUAL PROPERTY OWNERS ASSOCIATION
1501 M Street, NW, Suite 1150
Washington, DC 20005
(202) 507-4500

PAUL H. BERGHOFF
Counsel of Record
ERIN R. WOELKER
MCDONNELL BOEHNEN HULBERT & BERGHOFF LLP
300 South Wacker Drive
Chicago, Illinois 60606
(312) 913-0001
berghoff@mbhb.com

Counsel for Amicus Curiae

APPENDIX

APPENDIX[1]

Members of the Board of Directors
Intellectual Property Owners Association

Edward Blocker
Koninklijke Philips N.V.

Tina M. Chappell
Intel Corp.

William J. Coughlin
Ford Global Technologies LLC

Robert DeBerardine
Sanofi-Aventis

Anthony DiBartolomeo
SAP AG

Louis Foreman
Enventys

Scott M. Frank
AT&T

Darryl P. Frickey
Dow Chemical Co.

Roger Gobrogge
Rolls-Royce Corp.

Krish Gupta
EMC Corporation

Horacio Gutierrez
Microsoft Corp.

Jennifer M. Hall
Mars Inc.

Alan W. Hammond
Life Technologies Corp.

Dennis R. Hoerner, Jr.
Monsanto Co.

Carl B. Horton
General Electric Co.

Michael Jaro
Medtronic, Inc.

Philip S. Johnson
Johnson & Johnson

Lisa K. Jorgenson
STMicroelectronics, Inc.

Charles M. Kinzig
GlaxoSmithKline

Christopher H. Kirkman
The Travelers Companies, Inc.

---

1. IPO procedures require approval of positions in briefs by a two-thirds majority of directors present and voting.

David J. Koris
Shell International B.V.

Allen Lo
Google Inc.

Timothy F. Loomis
Qualcomm, Inc.

Steven W. Miller
Procter & Gamble Co.

Douglas K. Norman
Eli Lilly and Co.

Elizabeth A. O'Brien
Covidien

Sean O'Brien
United Technologies Corp.

Salvatore Pace
Praxair, Inc.

Richard F. Phillips
Exxon Mobil Corp.

Dana Rao
Adobe Systems Inc.

Kevin H. Rhodes
3M Innovative Properties Co.

Mark L. Rodgers
Air Products & Chemicals, Inc.

Curtis Rose
Hewlett-Packard Co.

Matthew Sarboraria
Oracle USA Inc.

Manny Schecter
IBM Corp.

Steven J. Shapiro
Pitney Bowes Inc.

Dennis C. Skarvan
Caterpillar Inc.

Russ Slifer
Micron Technology, Inc.

Terri H. Smith
Motorola Solutions, Inc.

Daniel J. Staudt
Siemens Corp.

Brian K. Stierwalt
ConocoPhillips

Thierry Sueur
Air Liquide

James J. Trussell
BP America, Inc.

Roy Waldron
Pfizer, Inc.

Michael Walker
DuPont

BJ Watrous
Apple Inc.

Stuart L. Watt
Amgen, Inc.

Paul D. Yasger
Abbott Laboratories

Michael Young
Roche, Inc.

AMICUS CURIAE BRIEF

Supreme Court, U.S.
FILED
DEC - 9 2013
OFFICE OF THE CLERK

No. 12-1163

RECORD
AND
BRIEFS

IN THE

Supreme Court of the United States

HIGHMARK INC.,

Petitioner,

v.

ALLCARE HEALTH MANAGEMENT SYSTEMS, INC.,

Respondent.

ON WRIT OF CERTIORARI TO THE UNITED STATES COURT OF APPEALS FOR THE FEDERAL CIRCUIT

BRIEF OF NEW YORK INTELLECTUAL PROPERTY LAW ASSOCIATION AS *AMICUS CURIAE* IN SUPPORT OF NEITHER PARTY

ANTHONY F. LO CICERO
President-Elect, NEW YORK INTELLECTUAL PROPERTY LAW ASSOCIATION
CHARLES R. MACEDO*
Co-Chair of Amicus Briefs Committee, NEW YORK INTELLECTUAL PROPERTY LAW ASSOCIATION
AMSTER, ROTHSTEIN & EBENSTEIN LLP
90 Park Avenue
New York, NY 10016
(212) 336-8000
cmacedo@arelaw.com

ROBERT M. ISACKSON
Co-Chair of Amicus Briefs Committee, NEW YORK INTELLECTUAL PROPERTY LAW ASSOCIATION
ORRICK, HERRINGTON & SUTCLIFFE LLP
51 West 52nd Street
New York, NY 10019
(212) 506-5000

Counsel for Amicus Curiae New York Intellectual Property Law Association

**Counsel of Record*

250557

COUNSEL PRESS
(800) 274-3321 • (800) 359-6859

Library of Congress
Law Library

QUESTION PRESENTED

The Court has agreed to hear two cases this term on the appropriate standard to be applied when determining whether a case is "exceptional" under 35 U.S.C. § 285.

The question presented in *Highmark Inc. v. Allcare Management Systems* (12-1163) is:

> Whether a district court's exceptional-case finding under 35 U.S.C. § 285 (which permits the court to award attorney's fees in exceptional cases), based on its judgment that a suit is objectively baseless, is entitled to deference.

The question presented in *Octane Fitness v. Icon Health and Fitness* (12-1184) is:

> Whether the Federal Circuit's promulgation of a rigid and exclusive two-part test for determining whether a case is "exceptional" under 35 U.S.C. § 285 improperly appropriates a district court's discretionary authority to award attorney fees to prevailing accused infringers in contravention of statutory intent and this Court's precedent, thereby raising the standard for accused infringers (but not patentees) to recoup fees and encouraging patent plaintiffs to bring spurious patent cases to cause competitive harm or coerce unwarranted settlements from defendants.

Although these cases were not consolidated by the Court, NYIPLA is submitting this Amicus Brief in both

cases because it respectfully submits that the answer to each question is dependent, at least in part, on the answer to the other question, with respect to whether unjustified litigation gives rise to an exceptional case.*

---

* The questions posed do not address the jurisprudence supporting other grounds for determining a patent case exceptional, such as willful or intentional infringement, inequitable conduct before the Patent and Trademark Office or other vexatious or malfeasant behavior in the course of litigation. *See, e.g., Multiform Desiccants, Inc. v. Medzam, Ltd.*, 133 F.3d 1473, 1481-82 (Fed. Cir. 1998).

TABLE OF CONTENTS

Page

QUESTION PRESENTED i

TABLE OF CONTENTS iii

TABLE OF CITED AUTHORITIES vi

INTEREST OF *AMICUS CURIAE* 1

SUMMARY OF ARGUMENT 3

ARGUMENT 6

I. GUIDING PRINCIPLES IN FORMULATING AN "EXCEPTIONAL" CASE ANALYSIS 6

A. The standard for declaring a case exceptional should be on parity for both patent holders and accused infringers 7

B. The standard used for Section 285 should not make patent litigation more costly or burdensome 8

C. The award of attorney fees should be limited to "exceptional" cases 10

D. The award of attorney fees under Section 285 should not be dictated by the standards for fee awards under other statutes 11

Table of Contents

Page

II. SLIGHTLY LOWER TWO-PART TEST WITH ULTIMATE DISCRETION LEFT TO THE TRIAL COURT 12

A. The analysis for an "exceptional" case should remain a two-part test. 13

B. The objective prong should be slightly easier to meet, but still subject to *de novo* review. 14

1. Arguments asserted with a low likelihood of success may contribute to an "exceptional" case. 14

2. The objective test should be reviewed *de novo*. 15

C. The subjective prong should focus on the purpose of the arguments made and be subject to review for clear error. 19

1. The subjective test should assess the purpose of the objectively meritless assertions 19

2. The subjective test should be reviewed for clear error 20

Table of Contents

Page

D. The final decision of whether to award attorney fees in an exceptional case should be left to the discretion of the district court 21

CONCLUSION 23

TABLE OF CITED AUTHORITIES

Page

Cases

Brooks Furniture Mfg. v. Dutailier Int'l, Inc.,
393 F.3d 1378 (Fed. Cir. 2005) 13

Chambers v. NASCO, Inc.,
501 U.S. 32 (1991) 12

Cooter & Gell v. Hartmarx Corp.,
496 U.S. 384 (1990)..... *passim*

Dominant Semiconductors Sdn. Bhd. v. OSRAM GmbH,
524 F.3d 1254 (Fed. Cir. 2008) 15

Dubil v. Rayford Camp & Co.,
184 F.2d 899 (9th Cir. 1950) 10

eBay Inc. v. MercExchange, L.L.C.,
547 U.S. 388 (2006)..... 21-22

Fleischmann Distilling Corp. v. Maier Brewing Co.,
386 U.S. 714 (1967).....18

Graham v. John Deere Co. of Kan. City,
383 U.S. 1 (1966).....7

Highmark, Inc. v. Allcare Health Mgmt. Sys.,
687 F.3d 1300 (Fed. Cir. 2012) 15, 19

Cited Authorities

Page

Holmes Grp., Inc. v. Vornado Air Circulation Systems, Inc.,
535 U.S. 826 18

Jacquard Knitting Mach. Co. v. Ordnance Gauge Co.,
213 F.2d 503 (3d Cir. 1954) 11

Markman v. Westview Instruments, Inc.,
517 U.S. 370 (1996) 18

Mathis v. Spears,
857 F.2d 749 (Fed. Cir.1988) 19

Mayo Collaborative Servs. v. Prometheus Labs., Inc.,
132 S. Ct. 1289 (2012) 11

Park-In-Theatres, Inc. v. Perkins,
190 F.2d 137 (9th Cir. Cal. 1951) 10, 11

Pierce v. Underwood,
487 U.S. 552 (1988) 16, 17

Prof'l Real Estate Investors v. Columbia Pictures Indus.,
508 U.S. 49 (1993) 13, 16

Quantum Corp. v. Tandon Corp.,
940 F.2d 642 (Fed. Cir. 1991) 9

Cited Authorities

Page

In re Seagate Tech., LLC,
497 F.3d 1360 (Fed. Cir. 2007) 9, 19

Sun-Tek Ind., Inc. v. Kennedy Sky Lites, Inc.,
929 F.2d 676 (Fed. Cir. 1991).....21

Statutes and Legislative History

28 U.S.C. § 1927.....4, 11

35 U.S.C. § 285..... *passim*

R.S. § 4921 10

S. Rep. No. 79-1503 (1946) 7-8

Rules

Fed. R. Civ. P. 11 ..... *passim*

Fed. R. Civ. P. 52 20

Other Authorities

Abraham Lincoln, *Lecture on "Discoveries, Inventions and Improvements,"* Feb. 22, 1860 7

AIPLA Report of the Economic Survey 2013 8

Intellectual Property and the U.S. Economy: Industries in Focus, Econ. & Statistics Admin. and USPTO (Mar. 2012) 6

INTEREST OF *AMICUS CURIAE*

The New York Intellectual Property Law Association ("NYIPLA" or "Association") respectfully submits this *amicus curiae* brief in support of neither party.[1]

The arguments set forth herein were approved on December 5, 2013 by an absolute majority of the officers and members of the Board of Directors of the NYIPLA, including any officers or directors who did not vote for any reason, including recusal, but do not necessarily reflect the views of a majority of the members of the Association, or of the law or corporate firms with which those members are associated. After reasonable investigation, the NYIPLA believes that no officer or director or member of the Committee on *Amicus* Briefs who voted in favor of filing this brief, nor any attorney associated with any such officer, director or committee member in any law or corporate firm, represents a party in this litigation. Some officers, directors, committee members or associated attorneys may represent entities, including other *amici curiae*, which have an interest in other matters which may be affected by the outcome of this litigation.

---

1. Counsel for Respondent Allcare Health Management Systems, Inc. and Petitioner Highmark, Inc. consented to the filing of an amicus curiae brief in a communication on November 11, 2013. Blanket consent to the filing of *amicus curiae* briefs, in support of either party or of neither party, was received from counsel for Petitioner Octane Fitness and counsel for Respondent Icon Health & Fitness, Inc. in a docket entry dated October 31, 2013. Pursuant to Sup. Ct. R. 37.6, no counsel for a party authored this brief in whole or in part, and no counsel or party made a monetary contribution intended to fund the preparation or submission of this brief. No person other than NYIPLA, its members, or its counsel made a monetary contribution to its preparation or submission.

The NYIPLA is a professional association of approximately 1,300 attorneys whose interests and practices lie in the area of patent, trademark, copyright, trade secret and other intellectual property law. The Association's members include a diverse array of attorneys specializing in patent law, from in-house counsel for businesses that own, enforce and challenge patents, to attorneys in private practice who represent inventors in various proceedings before the United States Patent and Trademark Office ("PTO").

A substantial percentage of the Association's member attorneys participate actively in patent litigation, representing both patent owners and accused infringers. The Association's members also frequently engage in patent licensing matters on their clients' behalf, representing both patent licensors and licensees. The entities served by the Association's members include inventors, entrepreneurs, venture capitalists, businesses, universities, and industry and trade associations.

NYIPLA's interest in this case stems from the influence this case may have on the potential for recovering attorney fees in exceptional cases and the influence that it might have on the litigation activities of patent right holders and owners including but not limited to patent assertion entities (PAEs). In particular, this case may be used as a vehicle for addressing the recent concerns arising in the patent law community and among policymakers and the popular media over litigation initiated by PAEs. However, NYIPLA has an equal concern that this case should not discourage patent rights holders and owners from legitimate assertions of their patent rights, whether the patent rights holders or owners are PAEs or practicing entities.

The activities of NYIPLA members and practitioners depend on the evenly-applied and predictably-construed rights granted under the Patent Act. Thus, NYIPLA sets forth guiding principles and proposed rules to encourage and balance these competing interests.

SUMMARY OF ARGUMENT

I. The NYIPLA appreciates the need for clarification regarding the discretion granted to trial courts in awarding attorney fees to prevailing parties in "exceptional" patent cases. Patents have long been a significant element of the U.S. economy, and there has been a great deal of press recently regarding the practices of enforcing them through litigation. The clear intent behind Section 285 is to provide a fee shifting remedy to prevailing parties when it would be unjust for them to bear the entire burden of their own attorney fees. Section 285 is intended to be impartial and available to any prevailing party as an appropriate remedy in such unwarranted cases. Section 285 should be equally available and applied evenly to both accused infringers and patentees who are an unjustly burdened prevailing party.

The NYIPLA respectfully submits that in order to address the situations in which an exceptional case under Section 285 should be found, and what level of deference to give the district court in making such a finding, the Court should consider the following guiding principles:

A. Patent holders and accused infringers should be treated evenly under Section 285.

B. The award of attorney fees under Section 285 should not lead to or require extensive and burdensome proceedings beyond the resolution of the dispute on the merits.

C. As the statute is currently written, attorney fees are only available in "exceptional" cases and thus should not be awarded in every case.

D. Section 285 provides a fee shifting remedy under the Patent Act that is distinct from sanctions awarded under Rule 11 and costs awarded under 28 U.S.C. § 1927, and thus does not need to apply the same standard.

II. With these guiding principles in mind, NYIPLA respectfully submits that the form of the present test for determining whether a case is "exceptional" under Section 285—a two-part test with an objective and subjective evaluation of the case, followed by a discretionary award by the district court—is an appropriate structure for the analysis, but that the current tests create too high of a bar to meet in order to adequately protect unjustly burdened prevailing parties from misconduct.

The NYIPLA respectfully advocates maintaining the current structure of a two-part test to provide a level playing field for prevailing patent owners and accused infringers—with an objective and subjective prong, after which an award *may* be awarded at the district court's discretion—but lowering the threshold required to meet each prong slightly. Once it is determined that both prongs are met, the ultimate decision—whether to award attorney fees and what the appropriate amount should

be—is, as is presently the case, left to the district court based on the court's observations throughout the course of the trial.

Specifically, the NYIPLA proposes that, in a Section 285 assessment of whether a case is exceptional, the district court consider:

1) Were the asserted claims or defenses *objectively* meritless (absent, *e.g.*, advocacy for a change in the law) such that any reasonable litigant would expect a low likelihood of success on the merits?

and

2) Was the litigant *subjectively* advancing such claims or defenses in the litigation for an improper purpose (*e.g.*, extorting money, prolonging the litigation, or increasing litigation costs)?

Assuming *both* parts of this test are met, the case would then be considered an "exceptional" case and the district court may exercise its discretion to award (or not award) some or all of the prevailing party's reasonable attorney fees.

Under this structure, the NYIPLA proposes that the objective prong be subject to *de novo* review, the subjective test be reviewed for clear error, and the ultimate award of the district court be reviewed for an abuse of discretion. Attorney fees awarded under the proposed test should continue to be available only to prevailing parties (whether alleged infringers or patentees).

ARGUMENT

I. GUIDING PRINCIPLES IN FORMULATING AN "EXCEPTIONAL" CASE ANALYSIS

Patents play a vital role in the economy, in part, by fulfilling their constitutionally-granted purpose of providing an incentive for innovation.[2] Enforcement of this granted "exclusive right" to patented subject matter is an important aspect of the incentive that patents provide. Thus, rules that encourage the enforcement of rightfully granted patents and the elimination of improper ones are useful in achieving the benefits of a functioning patent system. Over the past few years, there has been an increase in press coverage on patent enforcement practices that suggest a need to reconsider the application of Section 285 to address abusive litigation practices.

In evaluating the proper application of Section 285, while balancing the competing goals of compensating unjustly wronged parties and staying within the intent and language of the statute, the NYIPLA sets forth the following guiding principles:

---

2. *See Intellectual Property and the U.S. Economy: Industries in Focus*, Econ. & Statistics Admin. and USPTO (Mar. 2012), www.uspto.gov/news/publications/IP_Report_March_2012.pdf. ("The granting and protection of intellectual property rights is vital to promoting innovation and creativity and is an essential element of our free-enterprise, market-based system.").

A. The standard for declaring a case exceptional should be on parity for both patent holders and accused infringers

The patent statute is intended to be a carefully crafted system that both encourages invention and disclosure, but does not unreasonably foreclose access to such inventions. "The patent system . . . [adds] the fuel of interest to the fire of genius"[3] but that blaze might be smothered if the enforcement of granted patent rights is skewed by the judiciary. Just as a line must be drawn "between the things which are worth to the public the embarrassment of an exclusive patent, and those which are not,"[4] a balance between patent enforcement and defense against accused infringement must be made in the judicial system. In order to induce inventors "to bring forth new knowledge,"[5] patentees must be assured that they can enforce their patent rights without fear of exorbitant fees in the event of mere failure. Moreover, the economy, competition, and the advance of science may be stifled if businesses fear unwarranted and costly patent litigation.

In order to maintain the balance of the patent system, the standard for awarding attorney fees in an exceptional case should be equally available to prevailing patent holders and accused infringers. *See, e.g.*, S. Rep. No. 79-

---

3. Abraham Lincoln, *Lecture on "Discoveries, Inventions and Improvements,"* delivered before the Library Association of Springfield, Illinois, Feb. 22, 1860, *reprinted in* Charles R. Macedo, *The Corporate Insider's Guide to U.S. Patent Practice* 4 (2010).

4. *Graham v. John Deere Co. of Kan. City*, 383 U.S. 1, 9 (1966) (quoting Thomas Jefferson, Letter to Isaac McPherson (Aug. 1813))

5. *Id.*

1503 (1946), *reprinted in* 1946 U.S. Code Cong. Serv. 1386, 1387 (explaining that the predecessor statute of Section 285 "will discourage infringement of a patent by anyone thinking that all he would be required to pay if he loses the suit would be a royalty" but that "[t]he provision is also *made general* so as to enable the court to prevent a gross injustice to an alleged infringer." (emphasis added)). In other words, there should be parity; the same level of burdens and tests should be applied even-handedly, with no bias either way.

B. The standard used for Section 285 should not make patent litigation more costly or burdensome

One of the biggest problems associated with patent litigation is that it costs so much to resolve disputes in court.[6] Over the years, patent litigations have resulted in various satellite litigations on issues such as willful infringement and inequitable conduct, which are independent grounds for finding a patent case exceptional under Section 285. These proceedings have led to increased costs by increasing discovery demands, and requiring additional factual and legal findings outside of the resolution of the primary disputes on the merits of the infringement claim. Such diversions from the real issue are harmful to the patent system as a whole by raising the costs and burdens of patent litigation even higher.

One way to limit costs associated with litigating ancillary disputes, such as whether unwarranted patent

---

6. According to one study, even patent infringement suits with less than one million dollars at risk have a median litigation cost of $700,000. Report of the Economic Survey 2013, AIPLA 34 (Jul. 2013).

litigation rises to an exceptional case, is to make those issues subject to more predictably applied tests, rather than requiring exhaustive investigation into subjective details. For example, after *In re Seagate*, in which the Federal Circuit required a showing of *objective* recklessness for a finding of willful infringement, the widespread sideshow litigation on willful infringement was curtailed to only the more egregious cases. *In re Seagate Tech., LLC*, 497 F.3d 1360, 1369-71 (Fed. Cir. 2007) (explaining that "[s]ince *Underwater Devices*, we have recognized the practical concerns stemming from our willfulness doctrine," such as the "onerous" bifurcation of trials to avoid prejudice from the waiver of the attorney client privilege (citing to *Quantum Corp. v. Tandon Corp.*, 940 F.2d 642, 643-44 (Fed. Cir. 1991)). While a departure from the current two-part test for evaluating an "exceptional" case may be well intentioned, adopting a rule that spawns more satellite litigation in patent disputes is likely to be more harmful than helpful, by encouraging more baseless and costly litigation.

Thus, the test guiding the analysis of whether a case qualifies as "exceptional" should remain a two-part test, including both an objective and subjective prong, to allow for a predictable application of fees while limiting any additional discovery that might be involved in evaluating the subjective injustice alleged in the case. Because both parts of the test must be met for a case to be "exceptional," the objective test can be used as a threshold test before reaching any subjective issue that might require additional limited discovery.

C. The award of attorney fees should be limited to "exceptional" cases

The role of attorney fees in patent cases to act as a deterrent to baseless or dilatory arguments by the patent holders and infringers alike is important and should be encouraged, but attorney fees should not become run-of-the-mill and ordered against the loser in every case.

As is clear from the statutory language of Section 285, and the legislative history, the award of attorney fees was intended to be limited to cases fitting the definition of "exceptional." Section 285 replaced its predecessor statute on attorney fees, R.S. § 4921, to codify the prevailing practice in the courts and the original statutory intent. *See, e.g.*, Testimony of P.J. Federico Before the House Subcommittee at 108-109 (June 14, 1951)(explaining that the term "exceptional cases" "was picked up from the reports in passing [R.S. § 4921] and the decisions of the courts that have followed that"); *Park-In-Theatres, Inc. v. Perkins*, 190 F.2d 137, 142 (9th Cir. 1951) ("The Reports of House and Senate Committees . . . provided . . . that 'It is not contemplated that the recovery of attorney's fees will become an ordinary thing in patent suits.'" (quoting 1946 U.S. Code Cong. Serv. 1386, 1387)).

In awarding attorney fees under R.S. § 4921, the district courts had been required to state the basis for the award clearly. *See, e.g., Dubil v. Rayford Camp & Co.*, 184 F.2d 899, 903 (9th Cir. 1950). Acceptable grounds for the award included "unfairness or bad faith in the conduct of the losing party . . . which [made] it grossly unjust that the winner of the particular law suit be left to bear the burden of his own counsel fees which prevailing litigants

normally bear." *Park-In-Theatres*, 190 F.2d at 142; *accord Jacquard Knitting Mach. Co. v. Ordnance Gauge Co.*, 213 F.2d 503, 508-509 (3d Cir. 1954).

Thus, with the addition of the "exceptional" case limitation to Section 285, Congress, in response to the interpretation of its predecessor statute on attorney fees, intended the statute to be used to compensate prevailing parties for that level of injustice amounting to an "exceptional" case. Only after a case is determined "exceptional" is the discretion left to the district court as to whether to award attorney fees and in what amount.

D. The award of attorney fees under Section 285 should not be dictated by the standards for fee awards under other statutes

Although Section 285 may overlap with other legal authorities which provide for the grant of attorney fees or monetary penalties for improper conduct in litigation provisions—such as Rule 11 and 28 U.S.C. § 1927—it is a distinct remedy and need not apply the same standard as those provisions. *Cf. Mayo Collaborative Servs. v. Prometheus Labs., Inc.*, 132 S. Ct. 1289, 1303-04 (2012) (explaining that although two statutes might overlap, applying complementary sections instead of another statute "assum[es] that those sections can do work that they are not equipped to do"). Section 285 allows for the award of attorney fees in "exceptional" patent cases, which is not an equivalent to the sanctions specified in Rule 11 for an attorney's failure to conduct a "reasonable inquiry" and verify that specifically identified (and challenged) court filings "are well-grounded in fact, legally tenable, and 'not interposed for any improper purpose.'" *Cooter & Gell v.*

Hartmarx Corp., 496 U.S. 384, 393 (1990) ("*Cooter*"). Nor is Section 285 identical to the penalty under Section 1927 directed to an attorney who "multiplies the proceedings in any case unreasonably and vexatiously." *See Chambers v. NASCO, Inc.*, 501 U.S. 32, 48 (1991) (explaining that "the amendment to § 1927 allowing an assessment of fees against an attorney says nothing about a court's power to assess fees against a party"). While these provisions may cover similar conduct, or the same conduct may run afoul of the different provisions, each was implemented for a different purpose and may not be conflated.

II. SLIGHTLY LOWER TWO-PART TEST WITH ULTIMATE DISCRETION LEFT TO THE TRIAL COURT

A two-part test with objective and subjective prongs is an appropriate approach to guide the district courts in evaluating whether a case is "exceptional." However, the current two-part test is too high of a standard to cover many exceptional cases. Thus, the objective and subjective prongs of the current test should be relaxed while still providing sufficient guidance such that attorney fees will not be available as a rule in every case. The ultimate discretion allowed to the judge to apply such a remedy provides flexibility to ensure that attorney fees in a given case are granted based on unjust litigation claims or defenses that were observably "exceptional" over the course of the litigation.

A. The analysis for an "exceptional" case should remain a two-part test

The two-part test applied below for analyzing whether a case is "exceptional" was adopted by the Federal Circuit in *Brooks Furniture Mfg. v. Dutailier Int'l, Inc.*, 393 F.3d 1378, 1381 (Fed. Cir. 2005) and extracted from this Court's two-part definition of a "sham" litigation in *Prof'l Real Estate Investors v. Columbia Pictures Indus.*, 508 U.S. 49, 60 (1993) ("*PRE*"). In *PRE*, this Court outlined a two-part definition of "sham" litigation in the context of an antitrust violation as (1) an objectively baseless lawsuit "in the sense that no reasonable litigant could realistically expect success on the merits" brought in (2) subjectively bad faith such that it attempts to "interfere *directly* with the business relationships of a competitor." *Id.* (emphasis in original).

In *Brooks Furniture*, the Federal Circuit applied that antitrust standard from *PRE* to help define "exceptional" cases in patent law, such that a case is only considered "exceptional" for a prevailing accused infringer "if both (1) the litigation is brought in subjective bad faith, and (2) the litigation is objectively baseless." 393 F.3d at 1381. However, as this two-part test was originally developed to determine whether to grant immunity from an antitrust claim, it is too rigorous a standard to effectively include the numerous situations under which an "exceptional" patent case might arise.

Thus, the proposed test adopts the rationale of *PRE* to have a two-part test including both subjective and objective prongs, but lowers the threshold of each prong to account for the different standards in an antitrust

action—which impose treble damages in civil cases and can have criminal consequences—and a civil tort action under the patent laws. These lower bars are intended to more appropriately address the differences in the effects and the pertinent evidentiary support for an award of fees for an "exceptional" case under Section 285 as compared to a "sham litigation" that may deprive a party of antitrust immunity. For example, the assertion of exclusionary rights under copyright in just one lawsuit against one party, without more, may provide objectively little proof of anticompetitive behavior. Thus, a high standard for "sham litigation" before removing antitrust immunity corresponds with a possible severe penalty once that immunity is removed. In contrast, meritless arguments made for an improper purpose in one patent lawsuit is a fitting guideline for awarding fees under Section 285 in that particular lawsuit.

B. The objective prong should be slightly easier to meet, but still subject to *de novo* review

1. Arguments asserted with a low likelihood of success may contribute to an "exceptional" case

NYIPLA's proposed test slightly lowers the bars for finding a case "exceptional." For the objective prong, the proposed test changes the required "baselessness" of the merits from:

> "[O]bjectively baseless . . . such that ***no*** reasonable litigant could reasonably ***expect success*** on the merits."

Highmark, Inc. v. Allcare Health Mgmt. Sys., 687 F.3d 1300, 1309 (Fed. Cir. 2012) (quoting *Dominant Semiconductors Sdn. Bhd. v. OSRAM GmbH*, 524 F.3d 1254, 1260 (Fed. Cir. 2008)) (emphasis added).

to:

> Objectively meritless (absent, *e.g.*, advocacy for a change in the law) such that any reasonable litigant would expect a ***low likelihood*** of success on the merits.

Notably, a case that has a low level of merit such that it satisfies the objective prong is not automatically "exceptional." Because both the objective and subjective prongs must be met under this two-part test, a run-of-the-mill case that would allow a patent holder or accused infringer to fairly test the strength of their respective claims or defenses will continue to be ineligible to be named an "exceptional" case. Further, by advocating this test, the NYIPLA does not mean to suggest that any case with less than a 50% chance of success on the merits automatically meets the objective prong. Rather, the likelihood of success on the merits must be sufficiently low objectively, to any reasonable litigant who is not, for example, advocating for a change in the law or not reasonably advocating that the existing law should not apply to the particular facts of the case.

2. The objective test should be reviewed *de novo*

Although NYIPLA proposes using a lower standard for each of the prongs of the two-part objective/subjective

test, because the structure of the proposed test is unchanged from *PRE*, the standards of review for each of the prongs should be maintained. Therefore, the objective prong of the proposed two-part test should be subject to *de novo* review.

As discussed in *PRE*, the objective question of baselessness, or meritlessness in this case, is one of law. *PRE*, 508 U.S. at 63 (using "probable cause" as a proxy for the objective prong, and explaining that where "there is no dispute over the predicate facts of the underlying legal proceeding, a court may decide probable cause as a matter of law"). Two other cases that have been cited in the proceeding to argue that the objective prong should be reviewed under an "abuse of discretion"—*Pierce v. Underwood*, 487 U.S. 552 (1988)("*Pierce*") (analyzing whether the government's litigation position was "substantially justified" under the Equal Access to Justice Act ("EAJA")) and *Cooter* (analyzing sanctions imposed under Rule 11)—are distinguishable from *PRE* and the present cases. Both cases involved the award of fees under different legal authorities and relied heavily on the underlying factual determinations regarding the subjective *judgment* exercised in advancing litigation positions rather than the objective *merit* of those positions themselves.

In *Pierce*, this Court explained that the "substantially justified" analysis relied on facts that might not be conveyed by the record, such as the diligence of the government in forming its argument, leaving the trial court "better positioned" to decide the issue. *Pierce*, 487 U.S at 559-60. Furthermore, this Court explained that allowing *de novo* review of the government's

interpretation of the law *at the time* it formed its litigation position, might distort the appellate process for EAJA cases because a reversal on the fee decision could read on the underlying merits of the case and effectively uphold the lower merits decision without a formal appeal on the merits. *Id.* at 560-61. Neither of these concerns applies to the objective prong of an "exceptional" case analysis under Section 285. First, determining the objective merit of an asserted claim or defense does not depend on the litigant's diligence or other facts not in the record. Second, because in an "exceptional" case determination the appellate court is reviewing whether a rejected argument had a sufficiently *"low likelihood"* of success—instead of reviewing whether the government's losing position was nonetheless "substantially justified" as in an EAJA award—there is no risk of undermining any unappealed merits decision.

In *Cooter*, this Court explained that it is especially difficult to distinguish between legal and factual issues in a Rule 11 context because the appeal court cannot examine "purely legal questions, such as whether the attorney's legal argument was correct" but instead must consider "whether a pleading is 'warranted by existing law or a good faith argument' for changing the law ***and*** whether the attorney's conduct violated Rule 11." *Cooter*, 496 U.S. at 399, 401 (emphasis added). Thus, a court reviewing a Rule 11 determination must "consider issues rooted in factual determinations," such as any extenuating circumstances of the case and the competence of the signing attorney. *Id.* at 401-02. Again, the proposed objective prong of an "exceptional" case analysis does not involve such close factual questions, as it is concerned with the objective merits of the asserted claim or defense and not the reasonableness of the litigant's judgment in asserting it.

Additionally, the policy goals of Section 285 lean toward *de novo* review of the objective prong rather than an "abuse-of-discretion." Unlike in *Cooter*, in which the policy goals of Rule 11 were furthered by an "abuse of discretion" standard because "[t]he district court is best acquainted with the local bar's litigation practices," the Federal Circuit, and not the district court, is best positioned to evaluate the merits of a claim or defense asserted in patent litigation. *Cooter*, 496 U.S. at 404. Permitting the Federal Circuit to review the objective prong of the test for an "exceptional" case would encourage a more predictable application of Section 285 for prevailing parties and the uniformity of result for patent cases desired by Congress in creating the Federal Circuit. *See Markman v. Westview Instruments*, 517 U.S. 370, 390 (1996); *Holmes Grp., Inc. v. Vornado Air Circulation Sys.*, 535 U.S. 826, 840 (2002) (Ginsburg, J., concurring) (explaining that, in creating the Federal Circuit, "Congress sought to eliminate forum shopping and to advance uniformity in the interpretation and application of federal patent law"). Although Section 285 is an exception to the "American Rule," it is a limited exception. Leaving room for review by the one specialized patent court fulfills the policy goals of restricting the grant of attorney fees to "exceptional" cases while maintaining consistency such that parties are not "unjustly discouraged" from participation in the action. *Fleischmann Distilling Corp. v. Maier Brewing Co.*, 386 U.S. 714, 718, 720 n.16 (1967) ("In support of the American rule, it has been argued that since litigation is at best uncertain one should not be penalized for merely defending or prosecuting a lawsuit, and that the poor might be unjustly discouraged from instituting actions to vindicate their rights if the penalty for losing included the fees of their opponents' counsel.")

Moreover, *de novo* review allows the appellate court to benefit from the trial judge's reasoned determination of the objective test in the context of the given case, but does so from the perspective of placing that case in the landscape of what is objectively ordinary or exceptional patent litigation.

C. The subjective prong should focus on the purpose of the arguments made and be subject to review for clear error

1. The subjective test should assess the purpose of the objectively meritless assertions

NYIPLA's proposed test also lowers the bar for the subjective prong of the "exceptional" case analysis. The current subjective test is:

> Was the litigation brought in ***subjective bad faith*** due to the "lack of objective foundation [being] 'either ***known or so obvious that it should have been known***' by the party asserting the claim"?

Highmark, Inc., 687 F.3d at 1308-09 (quoting *In re Seagate Tech., LLC*, 497 F.3d 1360, 1371 (Fed. Cir. 2007)) (emphasis added).

The NYIPLA respectfully recommends that this test be changed to:

> Was the litigant subjectively advancing such claims or defenses in the litigation for an

> ***improper purpose*** (*e.g.*, extorting money, prolonging the litigation, or increasing litigation costs)?

This change refocuses the analysis from the bad faith of the non-prevailing party to the broader purpose of its behavior in the course of litigation. By focusing on the entire course of the litigation, any presumptions concerning why the litigation was initiated are moot and the parties are on an even playing field. The more comprehensive characterization of bad faith corresponds to the lower standard of the objective prong and allows for a wider range of "bad behavior" to qualify as bad faith, whether proven by direct evidence or inference from the parties' conduct of record in the case.

2. The subjective test should be reviewed for clear error

The subjective prong of the test, as a question of fact determined based on the intent of the non-prevailing party, should be reviewed for clear error. Fed. R. Civ. P. 52(a)(6).

Although the subjective test is inherently a question of fact, it should not be subject to a high evidentiary standard, in order to limit burdensome ancillary discovery and satellite litigation. Because direct evidence of subjective intent may be difficult or impossible to find, district courts should be permitted to infer subjective intent from indirect and circumstantial evidence to lower the cost and burden for this prong. Still, the subjective improper purpose should be the single most reasonable inference able to be drawn from that evidence.

Even though the subjective prong of the proposed two-part test might be related to the assessment of the objective prong, this subjective test is still a necessary and distinct part of an "exceptional" case analysis. For one, it might be an unacceptable outcome for an equitable remedy such as Section 285 to be applied against an actor who acted in good faith, but was merely unaware that its asserted arguments were meritless. Furthermore, unlike, for example, the EAJA, where the United States can be presumed to be advocating in good faith for the public interest, is no such presumption for a private actor. Instead, Section 285 was enacted to "codify in patent cases the 'bad faith' equitable exception to the American Rule. . . . Recognizing the good faith / bad faith distinction, Congress expressly limited such awards to 'exceptional cases'." *Sun-Tek Indus., Inc. v. Kennedy Sky Lites, Inc.*, 929 F.2d 676, 678 (Fed. Cir. 1991) (quoting *Mathis v. Spears*, 857 F.2d 749, 758 (Fed. Cir.1988). Accordingly, the subjective intent of the non-prevailing party must be included in the analysis of an "exceptional" case, but should be evaluated in a way that does not become so burdensome and costly as to override the underlying policy goals of the statute.

D. The final decision of whether to award attorney fees in an exceptional case should be left to the discretion of the district court

As this Court has made clear, because the statutory language of Section 285 provides that a district court "may" award attorney fees in exceptional cases, the decision to award fees after finding a case "exceptional" should be "an act of equitable discretion by the district court, reviewable on appeal for abuse of discretion." *eBay*

Inc. v. MercExchange, L.L.C., 547 U.S. 388, 391 (2006). In *eBay*, this Court held injunctions under patent law were subject to the same well-established principles of equity in awarding permanent injunctions in other areas of law. *Id.* The applicable test for injunctions consists of a four-factor test; only after all of the elements of the test are met may the court decide, within its discretion, whether to grant or deny injunctive relief. *Id.* This structure for the award of an injunction set out in *eBay* is analogous to the proposed two-part objective/subjective test under which each prong must be met before the court *may* award fees at its discretion.

Because the district court is left with the ultimate discretion of whether to award attorney fees based on the court's observations throughout the course of the litigation, the district court is given the appropriate amount of discretion under the two-part test.

CONCLUSION

The NYIPLA supports a predictably applied two-part objective/ subjective test for the analysis of whether a case is "exceptional" for the purposes of awarding attorney fees under Section 285. After the case is deemed "exceptional," a district court should be left with the discretion to award such fees. For the reasons stated above, the NYIPLA respectfully urges the Court to adopt its proposed test for the determination of an "exceptional" case.

Respectfully submitted,

ANTHONY F. LO CICERO
President-Elect, NEW YORK INTELLECTUAL PROPERTY LAW ASSOCIATION
CHARLES R. MACEDO*
Co-Chair of Amicus Briefs Committee, NEW YORK INTELLECTUAL PROPERTY LAW ASSOCIATION
AMSTER, ROTHSTEIN & EBENSTEIN LLP
90 Park Avenue
New York, NY 10016
(212) 336-8000
cmacedo@arelaw.com

ROBERT M. ISACKSON
Co-Chair of Amicus Briefs Committee, NEW YORK INTELLECTUAL PROPERTY LAW ASSOCIATION
ORRICK, HERRINGTON & SUTCLIFFE LLP
51 West 52nd Street
New York, NY 10019
(212) 506-5000

Counsel for Amicus Curiae
New York Intellectual Property Law Association

**Counsel of Record*

December 9, 2013

AMICUS CURIAE BRIEF

RECORD AND BRIEFS

Nos. 12-1184 & 12-1163

FILED
DEC - 9 2013
OFFICE OF THE CLERK
SUPREME COURT, U.S.

IN THE

Supreme Court of the United States

OCTANE FITNESS, LLC,
Petitioner,
v.
ICON HEALTH & FITNESS, INC.,
Respondent.

HIGHMARK INC.,
Petitioner,
v.
ALLCARE HEALTH MANAGEMENT SYSTEMS, INC.,
Respondent.

On Writs of Certiorari to the United States Court of Appeals for the Federal Circuit

BRIEF OF YAHOO! INC., THE NEW YORK TIMES COMPANY, NETAPP, INC., MEDTRONIC, INC., GENERAL MILLS, INC., EMC CORPORATION, AND BOSTON SCIENTIFIC CORPORATION AS *AMICI CURIAE* IN SUPPORT OF PETITIONERS

JOHN M. WHEALAN
4613 Merivale Rd.
Chevy Chase, MD 20815
(202) 994-2195
Counsel for Amici Curiae

KEVIN T. KRAMER
Deputy General Counsel – Intellectual Property
YAHOO! INC.
701 First Ave.
Sunnyvale, CA 94089
Counsel for Yahoo! Inc.

JEFFREY A. LAMKEN
Counsel of Record
MARTIN V. TOTARO
MOLOLAMKEN LLP
The Watergate, Suite 660
600 New Hampshire Ave., NW
Washington, D.C. 20037
(202) 556-2000
jlamken@mololamken.com
Counsel for Amici Curiae

Additional Counsel Listed on Inside Cover

WILSON-EPES PRINTING CO., INC. – (202) 789-0096 – WASHINGTON, D.C. 20002

Library of Congress
Law Library

LUKE DOHMEN
Chief Patent Counsel
BOSTON SCIENTIFIC CORP.
1 Scimed Place
Maple Grove, MN 55311
Counsel for Boston Scientific Corp.

KRISHNENDU GUPTA
Senior Vice President, Deputy General Counsel
EMC CORPORATION
176 South Street
Hopkinton, MA 01748
Counsel for EMC Corp.

CHAD HANSON, PH.D.
Senior Legal Counsel, IP Litigation
MEDTRONIC, INC.
710 Medtronic Parkway
LC300
Minneapolis, MN 55432
Counsel for Medtronic, Inc.

DOUGLAS LUFTMAN
Vice President, Innovation Services & Chief Intellectual Property Counsel
NETAPP, INC.
495 East Java Drive
Sunnyvale, CA 94089
Counsel for NetApp, Inc.

DAVID E. MCCRAW
Vice President & Assistant General Counsel
THE NEW YORK TIMES COMPANY
620 Eighth Avenue
New York, NY 10018
Counsel for The New York Times Company

WILLIAM D. MILLER
Chief Intellectual Property Counsel
GENERAL MILLS, INC.
Number One General Mills Boulevard
Minneapolis, MN 55426
Counsel for General Mills, Inc.

QUESTIONS PRESENTED

The question presented in No. 12-1184 is: Whether the Federal Circuit correctly construed the "exceptional case" standard in 35 U.S.C. § 285 to require both objective baselessness and subjective bad faith.

The question presented in No. 12-1163 is: Whether a district court's finding that a case is "exceptional" for purposes of 35 U.S.C. § 285 is reviewed on appeal de novo or for abuse of discretion.

TABLE OF CONTENTS

	Page
Questions Presented	i
Interest Of *Amici Curiae*	1
Summary Of Argument	3
Argument	5
I. Section 285's Capacious "Exceptional Cases" Standard Encompasses Circumstances Where Fee-Shifting Avoids Injustice Or Inequity	6
A. "Exceptional Cases" Means "Exceptional Cases"—Not Just Cases That Are Both Objectively Baseless And Pursued In Subjective Bad Faith	6
B. Pre-Enactment Practice Makes Clear That § 285 Permits Fee-Shifting As Appropriate To Avoid Injustice Or Inequity	8
C. The Federal Circuit's Current Test Departs From The Standard Applied In Other Circuits And, Until 2005, In The Federal Circuit Itself	11
D. The Federal Circuit's Standard Is Contrary To Systemic Interests	14
II. The Federal Circuit's Standard Creates Inappropriate And Imbalanced Incentives	17
A. The Federal Circuit's Standard Imposes Asymmetrical Burdens That Disfavor Defendants	17

TABLE OF CONTENTS—Continued

Page

B. Flexibility Is Needed To Deter Plaintiffs From Externalizing Costs 21

1. Patent Litigation Is Extraordinarily Costly 21

2. The Federal Circuit's Standard Encourages Marginal Claims And Aggressive Strategies 24

C. This Court Should Restore § 285 To Its Intended Scope So That It Can Serve Its Intended Purpose 27

III. District Court Exceptional-Case Determinations Should Be Reviewed For Abuse Of Discretion 29

A. Section 285's Text And History Support Review Under An Abuse-Of-Discretion Standard 29

B. This Court's Precedents Support Abuse-Of-Discretion Review 30

Conclusion 33

Appendix A – List Of *Amici Curiae* 1a

TABLE OF AUTHORITIES

Page(s)

CASES

Abraskin v. *Entrecap Corp.*, 55 F. Supp. 2d 224 (S.D.N.Y. 1999) 27

Algren Watch Findings Co. v. *Kalinsky*, 197 F.2d 69 (2d Cir. 1952) 10, 29

ALPO Petfoods, Inc. v. *Ralston Purina Co.*, 913 F.2d 958 (D.C. Cir. 1990) 32

Arbrook, Inc. v. *Am. Hosp. Supply Corp.*, 645 F.2d 273 (5th Cir. 1981) 12

Alyeska Pipeline Serv. Co. v. *Wilderness Soc'y*, 421 U.S. 240 (1975) 7

Associated Plastics Cos. v. *Gits Molding Corp.*, 182 F.2d 1000 (7th Cir. 1950) 9

Athletic Alts., Inc. v. *Prince Mfg., Inc.*, 73 F.3d 1573 (Fed. Cir. 1996) 22

BASF Corp. v. *Old World Trading Co.*, 41 F.3d 1081 (7th Cir. 1994) 32

BE & K Constr. Co. v. *NLRB*, 536 U.S. 516 (2002) 18

Beckman Instruments, Inc. v. *LKB Produkter AB*, 892 F.2d 1547 (Fed. Cir. 1989) 8

Blonder-Tongue Labs., Inc. v. *Univ. of Ill. Found.*, 402 U.S. 313 (1971) 20

Blue Dane Simmental Corp. v. *Am. Simmental Ass'n*, 178 F.3d 1035 (8th Cir. 1999) 32

Boss Control, Inc. v. *Bombardier Inc.*, 410 F.3d 1372 (Fed. Cir. 2005) 24

Brooks Furniture Mfg., Inc. v. *Dutailier Int'l Inc.*, 393 F.3d 1378 (Fed. Cir. 2005) ... *passim*

TABLE OF AUTHORITIES—Continued

Page(s)

Campbell v. *Spectrum Automation Co.*, 601 F.2d 246 (6th Cir. 1979) 29

Colortronic Reinhard & Co., K.G. v. *Plastic Controls, Inc.*, 668 F.2d 1 (1st Cir. 1981) 12

Conn. Nat'l Bank v. *Germain*, 503 U.S. 249 (1992) 7

Cooter & Gell v. *Hartmarx Corp.*, 496 U.S. 384 (1990) 30, 31

Cybor Corp. v. *FAS Techs., Inc.*, 138 F.3d 1448 (Fed. Cir. 1998) (en banc) 30

Doran v. *Salem Inn, Inc.*, 422 U.S. 922 (1975) 32

eBay Inc. v. *MercExchange, L.L.C.*, 547 U.S. 388 (2006) 13, 23, 26, 29

Eltech Sys. Corp. v. *PPG Indus., Inc.*, 903 F.2d 805 (Fed. Cir. 1990) 8, 13

Eon-Net LP v. *Flagstar Bancorp*, 653 F.3d 1314 (Fed. Cir. 2011) 14

Evans v. *Jeff D.*, 475 U.S. 717 (1986) 32

Farrar v. *Hobby*, 506 U.S. 103 (1992) 7

FilmTec Corp. v. *Hydranautics*, 67 F.3d 931 (Fed. Cir. 1995) 32

Fitzgerald v. *Barnstable Sch. Comm.*, 555 U.S. 246 (2009) 9

Fogerty v. *Fantasy, Inc.*, 510 U.S. 517 (1994) 7, 8, 17, 19

Gall v. *United States*, 552 U.S. 38 (2007) 32

ICU Med., Inc. v. *Alaris Med. Sys., Inc.*, 558 F.3d 1368 (Fed. Cir. 2009) 12

TABLE OF AUTHORITIES—Continued

Page(s)

In re Katz Interactive Call Processing Patent Litig., 639 F.3d 1303 (Fed. Cir. 2011) 25

In re Seagate Tech., LLC, 497 F.3d 1360 (Fed. Cir. 2007) (en banc) 18

Int'l Star Class Yacht Racing Ass'n v. *Tommy Hilfiger, U.S.A., Inc.*, 80 F.3d 749 (2d Cir. 1996) 32

Johnson v. *Jones*, 149 F.3d 494 (6th Cir. 1998) 32

K-Tech Telecomm., Inc. v. *Time Warner Cable, Inc.*, 714 F.3d 1277 (Fed. Cir. 2013) 22

KSR Int'l Co. v. *Teleflex, Inc.*, 550 U.S. 398 (2007) 15, 20

Lear, Inc. v. *Adkins*, 395 U.S. 653 (1969) 20

Mac's Shell Serv., Inc. v. *Shell Oil Prods. Co.*, 559 U.S. 175 (2010) 9

Mach. Corp. of Am. v. *Gullfiber AB*, 774 F.2d 467 (Fed. Cir. 1985) 11, 13

McZeal v. *Sprint Nextel Corp.*, 501 F.3d 1354 (Fed. Cir. 2007) 22

MedImmune, Inc. v. *Genentech, Inc.*, 549 U.S. 118 (2007) 20

Medtronic Navigation, Inc. v. *BrainLAB Medizinische Computersysteme GmbH*, 603 F.3d 943 (Fed. Cir. 2010) 27

Missouri v. *McNeely*, 133 S. Ct. 1552 (2013) 8

Monolithic Power Sys., Inc. v. *O2 Micro Int'l Ltd.*, 726 F.3d 1359 (Fed. Cir. 2013) 14

Nat'l Ass'n of Prof'l Baseball Leagues, Inc. v. *Very Minor Leagues, Inc.*, 223 F.3d 1143 (10th Cir. 2000) 32

TABLE OF AUTHORITIES—Continued

Page(s)

Nat'l Bus. Forms & Printing, Inc. v. *Ford Motor Co.*, 671 F.3d 526 (5th Cir. 2012)..... 32

Newport News Holdings Corp. v. *Virtual City Vision, Inc.*, 650 F.3d 423 (4th Cir. 2011)..... 32

Noxell Corp. v. *Firehouse No. 1 Bar-B-Que Rest.*, 771 F.2d 521 (D.C. Cir. 1985)..... 6

Park-In-Theatres, Inc. v. *Perkins*, 190 F.2d 137 (9th Cir. 1951)..... 10, 13

Phonometrics, Inc. v. *Hospitality Franchise Sys., Inc.*, 203 F.3d 790 (Fed. Cir. 2000)..... 22

Pierce v. *Underwood*, 487 U.S. 552 (1988)..... 31

Prof'l Real Estate Investors, Inc. v. *Columbia Pictures Indus., Inc.*, 508 U.S. 59 (1993)..... 17, 18

Read Corp. v. *Portec, Inc.*, 970 F.2d 816 (Fed. Cir. 1992)..... 8

Schoenhaus v. *Genesco, Inc.*, 351 F. Supp. 2d 320 (E.D. Pa. 2005)..... 22

Scotch Whisky Ass'n v. *Majestic Distilling Co.*, 958 F.2d 594 (4th Cir. 1992)..... 19

Secalt S.A. v. *Wuxi Shenxi Constr. Mach. Co.*, 668 F.3d 677 (9th Cir. 2012)..... 32

Securacomm Consulting, Inc. v. *Securacom Inc.*, 224 F.3d 273 (3d Cir. 2000)..... 32

Shingle Prod. Patents, Inc. v. *Gleason*, 211 F.2d 437 (9th Cir. 1954)..... 12

Specmade Prods., Inc. v. *Barnett*, 354 F.2d 229 (5th Cir. 1966)..... 29

Stillman v. *Edmund Scientific Co.*, 522 F.2d 798 (4th Cir. 1975)..... 12

TABLE OF AUTHORITIES—Continued

Page(s)

Therasense, Inc. v. *Becton, Dickinson & Co.*, 649 F.3d 1276 (Fed. Cir. 2011) (en banc) 16

Tire Kingdom, Inc. v. *Morgan Tire & Auto, Inc.*, 253 F.3d 1332 (11th Cir. 2001) 32

Turchan v. *Cincinnati Milling Mach. Co.*, 208 F.2d 228 (6th Cir. 1953) 10, 29

United States v. *Rodgers*, 461 U.S. 677 (1983) 8, 29

White v. *Regester*, 412 U.S. 755 (1973) 31

CONSTITUTIONAL PROVISIONS, STATUTES, AND RULES

U.S. Const. amend. I 17, 18

15 U.S.C. § 1117 ..... 13, 32

35 U.S.C. § 70 9

35 U.S.C. § 103 20

35 U.S.C. § 284 19

35 U.S.C. § 285 ..... *passim*

Fed. R. Civ. P. 11 ..... 12, 30, 31

D.N.J. Pat. R. 3.2A 23

D.N.J. Pat. R. 3.3 23

D.N.J. Pat. R. 3.4 23

D.N.J. Pat. R. 4 23

E.D. Tex. Pat. R. 3-1 23

E.D. Tex. Pat. R. 3-2 23

E.D. Tex. Pat. R. 3-3 23

E.D. Tex. Pat. R. 3-4 23

E.D. Tex. Pat. R. 4-1 23

E.D. Tex. Pat. R. 4-2 23

TABLE OF AUTHORITIES—Continued

Page(s)

E.D. Tex. Pat. R. 4-3 23
E.D. Tex. Pat. R. 4-4 23
N.D. Ill. Pat. R. 2.3 23
N.D. Ill. Pat. R. 2.4 23
N.D. Ill. Pat. R. 2.5 23
N.D. Ill. Pat. R. 3.1 23
N.D. Ill. Pat. R. 3.2 23
N.D. Ill. Pat. R. 3.3 23
N.D. Ill. Pat. R. 4 23

LEGISLATIVE MATERIALS

S. Rep. No. 79-1503 (1946) 7, 9

OTHER AUTHORITIES

Alan M. Ahart, *Attorneys' Fees: The Patent Experience*, 57 J. Pat. Off. Soc'y 608 (1975) 12

John R. Allison *et al.*, *Patent Quality and Settlement Among Repeat Patent Litigants*, 99 Geo. L. J. 677 (2011) 24

James Bessen *et al.*, *The Private and Social Costs of Patent Trolls*, 34 Regulation 26 (2011-2012) 23

James Bessen & Michael J. Meurer, *The Direct Costs from NPE Disputes*, B.U. School of Law Working Paper No. 12-34 (June 28, 2012) 21, 22

James Bessen & Michael J. Meurer, *The Private Costs of Patent Litigation*, 9 J.L. Econ. & Pol'y 59 (2012) 23

TABLE OF AUTHORITIES—Continued

Page(s)

Brief of Appellant, *Brooks Furniture Mfg., Inc.* v. *Dutailier Int'l Inc.*, 393 F.3d 1378 (Fed. Cir. 2005), 2003 WL 24305402 18

Brief of Appellee, *Brooks Furniture Mfg., Inc.* v. *Dutailier Int'l Inc.*, 393 F.3d 1378 (Fed. Cir. 2005), 2003 WL 24305403 18

Douglas A. Cawley, *District Court Patent Case Management Post-AIA*, 14 Sedona Conf. J. 77 (2013) 25

Colleen V. Chien, *Patent Trolls by the Numbers*, Patently-O Blog, http://www.patentlyo.com/patent/2013/03/chien-patent-trolls.html 27

Colleen V. Chien, *Reforming Software Patents*, 50 Hou. L. Rev. 325 (2012) 28

P.J. Federico, *Commentary on the New Patent Act*, 75 J. Pat. & Trademark Off. Soc'y 161 (1993) 10

Bronwyn Hall *et al.*, *A Study of Patent Thickets* (Nat'l Inst. of Econ. & Soc. Res. 2012) 26

Jay P. Kesan & Andres A. Gallo, *Why "Bad" Patents Survive in the Market and How Should We Change?*, 55 Emory L.J. 61 (2006) 26

Jay P. Kesan & Gwendolyn G. Ball, *How Are Patent Cases Resolved? An Empirical Examination of the Adjudication and Settlement of Patent Disputes*, 84 Wash. U. L. Rev. 237 (2006) 23, 24

TABLE OF AUTHORITIES—Continued

Page(s)

Patstats, *U.S. Patent Litigation Statistics* (Sept. 18, 2013), http://patstats.org/Patstats3.html 21

Hon. Randall R. Rader *et al.*, *Make Patent Trolls Pay in Court*, N.Y. Times, June 4, 2013 ..... 27, 28

Hon. Randall R. Rader, *The State of Patent Litigation*, 21 Fed. Cir. B. J. 331 (2012) 28

Reply Brief of Appellant, *Brooks Furniture Mfg., Inc.* v. *Dutailier Int'l Inc.*, 393 F.3d 1378 (Fed. Cir. 2005), 2003 WL 24305404 18

David Rosenberg & Steven Shavell, *A Model in Which Suits Are Brought for Their Nuisance Value*, 5 Int'l Rev. L. & Econ. 3 (1985) 28

Carl Shapiro, *Navigating the Patent Thicket: Cross Licenses, Patent Pools, and Standard Setting*, in *Innovation Policy & the Economy* 119 (A.B. Jaffe *et al.*, ed. 2001) 26

U.S.P.T.O, *Performance and Accountability Report, FY 2012* (2012), http://www.uspto.gov/about/stratplan/ar/USPTOFY2012PAR.pdf 20

Webster's New Int'l Dictionary (2d ed. 1954) 6

IN THE

Supreme Court of the United States

NOS. 12-1184 & 12-1163

OCTANE FITNESS, LLC,

Petitioner,

v.

ICON HEALTH & FITNESS, INC.,

Respondent.

HIGHMARK INC.,

Petitioner,

v.

ALLCARE HEALTH MANAGEMENT SYSTEMS, INC.,

Respondent.

On Writs of Certiorari to the United States Court of Appeals for the Federal Circuit

---

BRIEF OF YAHOO! INC., THE NEW YORK TIMES COMPANY, NETAPP, INC., MEDTRONIC, INC., GENERAL MILLS, INC., EMC CORPORATION, AND BOSTON SCIENTIFIC CORPORATION AS *AMICI CURIAE* IN SUPPORT OF PETITIONERS

INTEREST OF *AMICI CURIAE*

Amici are leading U.S. companies (listed and described in Appendix A) that have broad intellectual property portfolios they use to offer valuable goods and ser-

vices to the American public.[1] Cumulatively, *amici* employ over 200,000 people; have a market capitalization of over $200 billion; and contribute to the Nation's economic versatility, resiliency, and growth.

Amici operate in diverse industries—from medical devices, to multimedia news, to food products, to high-tech data storage and management—and share a strong interest in protection for intellectual property that is robust, fair, and balanced. At the same time, they share a strong belief that the Federal Circuit's current approach to attorney's fees awards for prevailing defendants unnecessarily exposes them to infringement claims that, despite their lack of merit, impose enormous legal costs and divert *amici*'s attention from the business of innovation to the management of litigation.

The Patent Act authorizes district courts to "award reasonable attorney fees to the prevailing party" in "*exceptional cases*." 35 U.S.C. §285 (emphasis added). For decades, courts of appeals—including the Federal Circuit—interpreted that provision flexibly to permit district courts to shift fees whenever the particular facts made it grossly unjust or inequitable for the prevailing party to bear its own fees. But the Federal Circuit in recent years has restricted district courts' ability to award fees to defendants, imposing an overly stringent two-part test that is incompatible with the statute's straightforward "exceptional case" threshold. The Federal Circuit's over-

---

[1] Pursuant to Supreme Court Rule 37.6, counsel for *amici curiae* states that no counsel for a party authored this brief in whole or in part or made a monetary contribution to the preparation and submission of this brief, and no person other than *amici*, their members, or their counsel made such a contribution. All parties consented to the filing of this brief. Copies of the letters granting consent have been filed with the Clerk.

demanding standard does too little to dissuade plaintiffs with dubious claims; nor does it seriously deter aggressive practices that drive up defense costs. And it creates an imbalance by making it more difficult for defendants to obtain fees than plaintiffs. A proper construction of § 285 would help restore greater balance to the patent system. The possibility of recovering fees in appropriate cases would encourage defendants to resist weaker cases. That would, in turn, improve patent quality by "culling" dubious patents through invalidity rulings.

Amici have participated in other cases addressing similar issues and have testified before Congress on patent reforms. As both owners of intellectual property and targets of infringement lawsuits, *amici* have a balanced perspective on, and unique insights into, ensuring an appropriate construction of § 285 that respects its text and history. Properly construed, § 285 should provide district courts with the necessary flexibility to award fees and avoid gross injustice as the facts and circumstances warrant.

SUMMARY OF ARGUMENT

I. Section 285 of the Patent Act states that a district court "may award reasonable attorney fees to the prevailing party" in "exceptional cases." That provision gives district courts three guideposts to follow. It allows district courts to shift fees when a case is "exceptional," which means "uncommon" or "extraordinary." It requires prevailing plaintiffs and defendants to be treated equally. And it grants trial courts discretion to determine both whether to grant fees in the first instance and, if so, in what amount. The Federal Circuit's current approach—which precludes fees from being awarded against the patentee unless (a) the suit is brought in sub-

jective bad faith *and* (b) the litigation is objectively baseless—departs from those critical guideposts.

When Congress enacted § 285 in 1952, it codified a preexisting body of patent precedent that consistently permitted district courts to award fees to prevailing plaintiffs or defendants whenever that would avoid a gross injustice. For decades after § 285's enactment, no court of appeals required a showing of both objective baselessness and subjective bad faith. To the contrary, for decades, the federal courts, including the Federal Circuit, consistently accorded district courts flexibility to award fees where justice so required. The Federal Circuit erred when, in 2005, it departed from that longstanding approach and required both objective baselessness and subjective bad faith as a prerequisite to fee awards against patentees.

That rigid, two-part test also leads to perverse incentives. It allows claims that are *either* frivolous *or* pursued in bad faith to go unaddressed. Rather than remedy those deficiencies, the Federal Circuit has created an exception for fee-shifting in cases involving litigation misconduct or misconduct in securing a patent. Creating special categories with separate standards finds no basis in the statute itself, which allows a fee award in any exceptional case. And a judicially created "litigation misconduct" category deters fee awards and encourages unproductive accusations.

II. The Federal Circuit's approach results in differential treatment of prevailing plaintiffs and defendants. By holding prevailing defendants to a higher evidentiary standard to justify a fee award, the Federal Circuit exacerbates an already uneven landscape where plaintiffs can bring infringement claims with little downside risk and the potential for rich damages awards, while defendants

face immense risks and virtually no potential to recover even their costs. Patent infringement litigation is inherently expensive and time-consuming to defend. Those considerations often force defendants to settle, even where a patentee's claims are weak. As a result, nuisance suits have become commonplace and "junk" patents proliferate. Restoring the flexible standard that prevailed before 2005 would go a long way toward reestablishing balance to our patent system.

III. For over half a century, courts of appeals applying §285 respected its language, reviewing district court fee awards for abuse of discretion. This Court, in analogous situations, has similarly held that an abuse-of-discretion standard should apply. The district court—which often lives with a lawsuit for years—is in a better position than an appeals court to assess all the facts and circumstances that would inform a decision to award fees. The Federal Circuit has upset that allocation of institutional prerogatives.

ARGUMENT

The presumption under the "American rule" is that each party bears its own legal fees and costs. Departing from that rule, Congress authorized district courts in patent cases to award attorney's fees to prevailing parties "in exceptional cases." 35 U.S.C. §285. Properly construed, that standard affords a district court discretion to enter a fee award in favor of a plaintiff or defendant whenever it would be grossly unjust or inequitable for the prevailing party to bear its own costs. That standard is well-supported in the statutory text, the provision's history, and in related areas of law. And for decades, courts—including the Federal Circuit—properly understood and applied that standard with due regard for the individual circumstances of each case.

In recent years, however, the Federal Circuit has severely restricted the authority of district courts to enter fee awards in favor of defendants. "Absent misconduct in conduct of the litigation or in securing the patent," the Federal Circuit has ruled, fees cannot be awarded "against the patentee" unless "*both* (1) the litigation is brought in *subjective bad faith*, and (2) the litigation is *objectively baseless*." *Brooks Furniture Mfg., Inc.* v. *Dutailier Int'l Inc.*, 393 F.3d 1378, 1381 (Fed. Cir. 2005) (emphasis added). Those rigid requirements cannot be reconciled with the standard set forth in § 285. They are incompatible with practice under § 285's predecessor, decades of practice under § 285 itself, and practice under parallel provisions in other areas of law. And they so restrict the availability of fees for prevailing defendants that § 285 no longer serves its intended purpose.

I. Section 285's Capacious "Exceptional Cases" Standard Encompasses Circumstances Where Fee-Shifting Avoids Injustice Or Inequity

A. "Exceptional Cases" Means "Exceptional Cases"—Not Just Cases That Are Both Objectively Baseless And Pursued In Subjective Bad Faith

For over 60 years, the Patent Act has provided that "[t]he court in exceptional cases may award reasonable attorney fees to the prevailing party." 35 U.S.C. § 285. That succinct statutory directive provides three critical guideposts.

First, fees are to be awarded only in "exceptional cases." The word "exceptional" means "not ordinary; uncommon; rare." *Webster's New Int'l Dictionary* 889 (2d ed. 1954). "Exceptional" should thus be construed "to mean what the word is generally understood to indicate—uncommon, not run-of-the-mine." *Noxell Corp.* v.

Firehouse No. 1 Bar-B-Que Rest., 771 F.2d 521, 526 (D.C. Cir. 1985). It does not mean "subjective bad faith" or "objectively baseless" claims, let alone both. Because Congress "says in a statute what it means and means in a statute what it says," *Conn. Nat'l Bank* v. *Germain*, 503 U.S. 249, 253-254 (1992), "exceptional" means uncommon or extraordinary—neither more nor less.

While flexible, that standard fulfills a critical function. "Unlike Britain where counsel fees are regularly awarded to the prevailing party, it is the general rule in this country that unless Congress provides otherwise, parties are to bear their own attorney's fees." *Fogerty* v. *Fantasy, Inc.*, 510 U.S. 517, 533 (1994); see *Alyeska Pipeline Serv. Co.* v. *Wilderness Soc'y*, 421 U.S. 240, 247-262 (1975). By limiting fee awards to "exceptional" cases, Congress made clear that it was not making fee awards the norm or licensing ad-hoc departures in otherwise quotidian cases. Rather, Congress authorized fee awards where adhering to the traditional rule would result in "gross injustice" or similar inequity. See S. Rep. No. 79-1503, at 2 (1946).

Second, fees are available only to "prevailing parties," a well-known standard that equally encompasses prevailing defendants and plaintiffs. See *Farrar* v. *Hobby*, 506 U.S. 103, 109-112 (1992) (defining prevailing parties). The phrase "award a reasonable attorney's fee to the prevailing party" gives "no hint that successful plaintiffs are to be treated differently from successful defendants." *Fogerty*, 510 U.S. at 522. To the contrary, that text makes clear that "[p]revailing plaintiffs and prevailing defendants are to be treated alike." *Id.* at 534. Indeed, *Fogerty* invoked §285 itself as "support[ing] a party-neutral approach." *Id.* at 525 n.12. At least back when *Fogerty* was decided, courts applying §285 "generally

awarded attorney's fees in an evenhanded manner based on the same criteria," an outcome "[c]onsistent with the party-neutral language." *Ibid.* (citing *Eltech Sys. Corp.* v. *PPG Indus., Inc.*, 903 F.2d 805, 811 (Fed. Cir. 1990)).

Third, by providing that district courts "may" award fees to the prevailing party, § 285 affords courts latitude to identify, on a case-by-case basis, whether the circumstances justify a fee award. The word "may" implies discretion. See, *e.g.*, *United States* v. *Rodgers*, 461 U.S. 677, 706 (1983). That discretion is reinforced by the statutory directive that the court award a "reasonable attorney fee[ ]," rather than a fixed proportion—or the entirety—of the incurred fees. As in other contexts, district courts should survey the facts and circumstances to determine what is "reasonable," adjusting fees in relation to the reason for their imposition. See, *e.g.*, *Missouri* v. *McNeely*, 133 S. Ct. 1552, 1560 (2013).[2]

B. Pre-Enactment Practice Makes Clear That § 285 Permits Fee-Shifting As Appropriate To Avoid Injustice Or Inequity

Section 285's background and history confirm the broad flexibility Congress intended to provide. Far from writing on a clean slate when it enacted § 285, Congress acted against the backdrop of an established body of patent-law precedent, including judicial construction of § 285's predecessor. That backdrop demonstrates Congress's intent to vest courts with flexibility to award fees to defendants and plaintiffs alike in light of a range of

---

[2] For example, a district court may award partial fees where the fee is predicated on conduct in a specific phase of the litigation. See *Read Corp.* v. *Portec, Inc.*, 970 F.2d 816, 831 (Fed. Cir. 1992). A partial fee award may also be appropriate where a party prevails on only a subset of claims or defenses. Cf. *Beckman Instruments, Inc.* v. *LKB Produkter AB*, 892 F.2d 1547, 1554 (Fed. Cir. 1989).

equitable considerations. This Court generally presumes that Congress is aware of how courts have applied relevant legal concepts and, absent contrary evidence, that it intends to incorporate those existing understandings. See *Fitzgerald* v. *Barnstable Sch. Comm.*, 555 U.S. 246, 258-259 (2009); *Mac's Shell Serv., Inc.* v. *Shell Oil Prods. Co.*, 559 U.S. 175, 184-185 (2010). That presumption should control here.

1. Congress first authorized fee-shifting in patent cases when it enacted § 285's predecessor in 1946. That provision declared that "[t]he court may in its discretion award reasonable attorney's fees to the prevailing party upon the entry of judgment on any patent case." 35 U.S.C. § 70 (1946). By its plain terms, that provision was discretionary: It declared that a district court, on entering judgment, "may in its discretion" provide for fees. *Ibid.* Congress expected such awards to be granted when appropriate to "prevent a gross injustice to an alleged infringer." S. Rep. No. 79-1503, at 2 (1946).

Courts applying that provision understood and adhered to those boundaries. "[A]ttorneys' fees," they recognized, "are not to be allowed as a matter of course." *Associated Plastics Cos.* v. *Gits Molding Corp.*, 182 F.2d 1000, 1006 (7th Cir. 1950). Instead, fees could be granted only in the unusual case where failing to do so would result in gross injustice or similar inequity. As the Ninth Circuit summarized, fee shifting was appropriate upon

> a finding of *unfairness or bad faith* in the conduct of the losing party, *or some other equitable consideration of similar force*, which makes it *grossly unjust* that the winner of the particular law suit be left to bear the burden of his counsel fees which prevailing litigants normally bear.

Park-In-Theatres, Inc. v. *Perkins*, 190 F.2d 137, 142 (9th Cir. 1951) (emphasis added).

Thus, in some cases, "bad faith" alone was considered sufficient to shift fees, without reference to the validity of the infringement allegations. See *Turchan* v. *Cincinnati Milling Mach. Co.*, 208 F.2d 228, 229 (6th Cir. 1953). Other times, bad faith was defined broadly to encompass cases where "[t]he deficiency of the proof which the plaintiff offered at the trial could well have been taken as an indication of bad faith." *Algren Watch Findings Co.* v. *Kalinsky*, 197 F.2d 69, 72 (2d Cir. 1952). Regardless, the standard remained inherently flexible: District courts had wide discretion to determine the circumstances in which an award of fees would be justified to prevent "unfairness," compensate for "bad faith," or address any "other equitable consideration of similar force." *Park-In-Theatres*, 190 F.2d at 142.

2. Those understandings were incorporated into § 285. While this Court ordinarily presumes that Congress is aware of and intends to incorporate settled understandings, that presumption has special force here. P.J. Federico—the principal author of the 1952 Act and a chief patent examiner at the U.S. Patent & Trademark Office—explained that Congress intended to incorporate prior practice:

> Section 285, providing for the recovery of attorney fees by the prevailing party, is substantially *the same* as the corresponding sentence of the old statute, with the addition of 'in exceptional cases' *to express the intention of the old statute as shown by its legislative history and as interpreted by the courts.*

P.J. Federico, *Commentary on the New Patent Act*, 75 J. Pat. & Trademark Off. Soc'y 161, 216 (1993) (emphasis

added). Quoting that language, the Federal Circuit recognized early on that Congress intended §285 to be "substantially the same" as the prior fee-shifting provision. *Mach. Corp. of Am.* v. *Gullfiber AB*, 774 F.2d 467, 471 (Fed. Cir. 1985).

Nothing in the text of §285's predecessor incorporated a rigid, two-part requirement of "subjective bad faith" and "objective baselessness." Nothing in "its legislative history" counseled such a standard. Nor was there any suggestion that §285's predecessor, as "interpreted by the courts," had been construed to incorporate such requirements. And nothing supports superimposing that two-part requirement on §285 here.

C. The Federal Circuit's Current Test Departs From The Standard Applied In Other Circuits And, Until 2005, In The Federal Circuit Itself

For decades, courts applying §285—including the Federal Circuit—adhered to and successfully applied §285's flexible "exceptional case" standard directly, awarding fees whenever requiring the prevailing party to cover its own fees would result in gross inequity. In 2005, however, the Federal Circuit departed from the statutory guideposts and pre-enactment practice, adopting a rigid, two-part test to determine when defendants may recover fees. In *Brooks Furniture*, the court declared that "[a]bsent misconduct in conduct of the litigation or in securing the patent," attorney's fees "may be imposed *against the patentee only if both* (1) the litigation is brought in *subjective bad faith, and* (2) the litigation is *objectively baseless*." 393 F.3d at 1381.

That departure from the prior, flexible standard in favor of a rigid, two-pronged rule has no basis in the text of §285. The broad standard of "exceptional cases" nowhere suggests a strict requirement that a prevailing

party prove bad faith *and* objective baselessness to justify a fee award. Nor can that two-part test be reconciled with pre-enactment practice.[3] In fact, in announcing that test, the Federal Circuit departed from its own precedents and from the standards in related areas of law.

1. For decades, courts applied §285 consistent with prior practice and Congress's intent. Shortly after the Patent Act's enactment in 1952, for example, the Ninth Circuit explained that §285—like its predecessor—authorized fee awards based on "unfairness or bad faith in the conduct of the losing party" or any "equitable consideration of similar force" that would make it "grossly unjust" for each side to bear its own fees. *Shingle Prod. Patents, Inc.* v. *Gleason*, 211 F.2d 437, 441 (9th Cir. 1954). In *Shingle Product Patents*, the court found bad faith because the patentee "knew or should have known that the patents were invalid," a finding reinforced by the fact that the plaintiff was "set up as an asset-less corporation by the real parties in interest solely for the purpose of bringing harassing suits without liability to the real parties." *Ibid.* Other courts reached similar results. See, *e.g.*, *Colortronic Reinhard & Co., K.G.* v. *Plastic Controls, Inc.*, 668 F.2d 1, 8 (1st Cir. 1981); *Arbrook, Inc.* v. *Am. Hosp. Supply Corp.*, 645 F.2d 273, 279 (5th Cir. 1981); *Stillman* v. *Edmund Scientific Co.*, 522 F.2d 798, 800 (4th Cir. 1975); see Alan M. Ahart, *Attorneys' Fees: The Patent Experience*, 57 J. Pat. Off. Soc'y 608, 631-632

---

[3] Indeed, the Federal Circuit's current test renders §285 largely redundant in light of Rule 11, which authorizes fee awards as a sanction under a similar standard. See *ICU Med., Inc.* v. *Alaris Med. Sys., Inc.*, 558 F.3d 1368, 1381 (Fed. Cir. 2009) (Rule 11 sanctions evaluated under "a two-prong inquiry to determine (1) whether the complaint [or relevant document] is legally or factually 'baseless' from an objective perspective, and (2) if the attorney has conducted 'a reasonable and competent inquiry' before signing and filing it").

(1975) (noting the wide variety of circumstances where fees were shifted to an alleged infringer).

From its creation in 1982 until 2005, the Federal Circuit applied §285 in a similarly flexible fashion. For years, the Federal Circuit's lodestar for fee awards was whether there was "'some * * * equitable consideration * * * which makes it *grossly unjust* that the winner of the particular law suit should be left to bear the burden of his counsel fees.'" *Gullfiber AB*, 774 F.2d at 471 (quoting *Park-In-Theatres*, 190 F.2d at 142 (emphasis added)). The court nowhere insisted on a showing of bad faith and objective baselessness. Indeed, it allowed alleged infringers to recover attorney's fees from patentees based on gross negligence, *id.* at 473, or recklessness, *Eltech*, 903 F.2d at 811.

2. When construing the patent laws, this Court often consults other areas of intellectual property law. See, *e.g.*, *eBay Inc.* v. *MercExchange, L.L.C.*, 547 U.S. 388, 392 (2006). Here, the fee-shifting provision in the trademark statute parallels §285. It too states that "[t]he court in exceptional cases may award reasonable attorney fees to the prevailing party." 15 U.S.C. §1117.

As petitioner explains, the Federal Circuit's imposition of its two-prong test conflicts with every regional court of appeals' application of the identically worded fee-shifting provision in the trademark statute. See Pet. Br. 29-34. No court interprets the "exceptional case" language in the trademark statute to require a showing of both objective baselessness and subjective bad faith. That the Federal Circuit stands alone in its approach speaks volumes.

D. The Federal Circuit's Standard Is Contrary To Systemic Interests

The Federal Circuit's standard is not merely contrary to text and history. It is also inconsistent with sound principles of judicial administration. The Federal Circuit's conjunctive test—which requires *both* subjective bad faith *and* objective baselessness—does not identify "exceptional" cases so much as it produces inequitable results. A plaintiff bringing a case in subjective bad faith *will not* pay its opponent's fees so long as the claim is not totally baseless—so long as there is a scintilla of merit. And even extreme over-reaching and assertion of baseless claims will not result in fee-shifting absent a clear-and-convincing showing of the patentee's subjective bad faith. Defendants like *amici* are thus forced to spend millions of dollars defending objectively baseless or harassing lawsuits without any significant likelihood that they will be reimbursed for mounting a successful defense.

Perhaps recognizing that its two-part test departs from the statute's text and encourages inappropriate results, the Federal Circuit has attempted to limit its scope. *Brooks Furniture*'s twin requirements, the Federal Circuit has emphasized, do not apply when fees are sought for "misconduct in conduct of the litigation or in securing the patent." 393 F.3d at 1381; see, *e.g.*, *Monolithic Power Sys., Inc.* v. *O2 Micro Int'l Ltd.*, 726 F.3d 1359, 1366 (Fed. Cir. 2013) (because "it is only absent litigation misconduct or misconduct in securing the patent that we require the finding of both 'bad faith' and 'objectively baseless' litigation," "litigation misconduct alone may suffice to make a case exceptional"); *Eon-Net LP* v. *Flagstar Bancorp*, 653 F.3d 1314, 1324 (Fed. Cir. 2011) (similar).

But that new emphasis on litigation misconduct merely exacerbates the initial error.[4]

For one thing, that approach creates additional, special categories, each with its own separate standard. The *filing* of a lawsuit can result in fee-shifting only if *Brooks Furniture*'s two-part bad-faith/objective-baselessness test is met, while *litigation misconduct* or *misconduct in securing a patent* can result in fees under a *different standard*. But §285 merely directs courts to examine whether the case is sufficiently "exceptional" so as to warrant fees. It does not provide a grid that identifies different justifications for fees—the filing of a marginal suit, "litigation misconduct" in prosecuting a suit, "misconduct in securing a patent"—each with different requirements. Worse, the (judicially created) "litigation misconduct" exception to the (also judicially created) two-part *Brooks Furniture* test deters otherwise justified fee awards. Many courts may be reluctant to impugn the reputation of counsel—with potentially lasting effects—by finding "litigation misconduct." Nothing in §285 evinces Congress's intent to limit fee awards to courts that are more willing to make findings with potentially grave reputational impacts.

Nor is such a limit warranted. There may well be times where plaintiff's counsel makes a strategic decision that imposes unjustified costs on defendants. A plaintiff, for example, may delay narrowing its suit from hundreds of asserted claims to the handful it will assert at trial, prolonging discovery and imposing significant costs on

---

[4] For those reasons, this case resembles *KSR Int'l Co.* v. *Teleflex, Inc.*, 550 U.S. 398 (2007). To the extent the Federal Circuit has announced flexibility at the outer edges of its application of §285, that "do[es] not correct the errors of law made by the Court of Appeals in this case." *Id.* at 422.

defendants. Or it may assert extraordinarily broad claim constructions, requiring extensive discovery on current and past products, as well as expert reports on industry understanding of specific terms and lengthy *Markman* hearings. Such tactics may justify fee-shifting to prevent plaintiffs from imposing the gross injustice that results when the costs of marginal strategic decisions are externalized onto innocent defendants. But one need not label that strategic decision "misconduct" for fees to be warranted. If the case is "exceptional," that is enough.

The separate "litigation misconduct" category is also problematic for counsel. Practice under §285's predecessor—and decades of practice under §285 itself—permitted fees to be awarded if equity so required under the circumstances; there was no requirement that opposing counsel's conduct or motives be attacked or impugned. The Federal Circuit's recent cases, by contrast, encourage—and require courts to adjudicate—attacks by counsel on each other. Such accusations are damaging to the legal profession. Cf. *Therasense, Inc.* v. *Becton, Dickinson & Co.*, 649 F.3d 1276, 1289 (Fed. Cir. 2011) (en banc) (lamenting "an absolute plague" that results when "[r]eputable lawyers seem to feel compelled to make the charge against other reputable lawyers on the slenderest grounds, to represent their client's interests adequately, perhaps" (quotation marks omitted)). When such accusations are leveled with regularity, the reputation and integrity of the entire system suffers.

Successful defendants seeking to avoid a gross injustice for their clients should not be required to resort to name-calling to obtain fees. Nor should trial courts be reduced to doing likewise to award them. Some strategic calls by plaintiff's counsel may impose large costs on defendants while falling short of "litigation misconduct."

Such choices should be sufficient, in appropriate circumstances, to render the case "exceptional." If requiring the plaintiff to internalize the costs of its own strategic choices is necessary to avoid a gross injustice—misconduct or not—fees should be available.

II. The Federal Circuit's Standard Creates Inappropriate And Imbalanced Incentives

The Federal Circuit's standard results in imbalanced incentives, subjecting infringement defendants to disfavored treatment and undermining the goals § 285 was designed to serve.

A. The Federal Circuit's Standard Imposes Asymmetrical Burdens That Disfavor Defendants

Congress codified a singular standard in § 285: If the case is "exceptional," the district court may award fees to "the prevailing party." As explained above, that text does not differentiate between plaintiffs and defendants. See pp. 7-8, *supra*. And this Court has held that very similar language in the Copyright Act—that a trial court may "award a reasonable attorney's fee to the prevailing party"—dictates that "[p]revailing plaintiffs and prevailing defendants are to be treated alike." *Fogerty*, 510 U.S. at 533-534.

The Federal Circuit's 2005 decision in *Brooks Furniture* defied that directive when, rather than adhering to the statutory text, it restricted fee awards in favor of defendants by imposing a two-prong "subjective bad faith" and "objectively baseless" standard borrowed from the definition of "sham litigation" announced in *Professional Real Estate Investors, Inc.* v. *Columbia Pictures Industries, Inc.*, 508 U.S. 59 (1993) ("*PREI*"). See *Brooks Furniture*, 393 F.3d at 1381-1382. As petitioner explains, see Pet. Br. 22-25, the First Amendment concerns underlying *PREI* are inapposite in the context of fee-shifting

statutes like §285. Indeed, no party in *Brooks Furniture* even cited *PREI*—which does not address patent infringement or involve a fee-shifting statute—in the Federal Circuit briefing. See Br. of Appellant, 2003 WL 24305402 (Fed. Cir. July 14, 2003); Br. of Appellee, 2003 WL 24305403 (Fed. Cir. Aug. 20, 2003); Reply Br. of Appellant, 2003 WL 24305404 (Fed. Cir. Sept. 5, 2003). And this Court has made clear that the First Amendment right to petition at issue in *PREI* does not invalidate "statutory provisions," like §285, "that merely authorize the imposition of attorney's fees on a losing plaintiff." *BE & K Constr. Co.* v. *NLRB*, 536 U.S. 516, 537 (2002).

This Court's holding in *PREI* is not merely irrelevant to §285. It also squarely contradicts the statute's policy of treating plaintiffs and defendants equally. *PREI*'s deliberately narrow "sham litigation" exception is designed to protect parties exercising their right to petition for redress of grievances—those filing suit—from damages liability. It thus *protects plaintiffs* from adverse consequences for asserting claims. By importing that (inapposite) plaintiff-protective standard into §285—to determine when fees "may be imposed against the patentee"—the Federal Circuit predictably departed from §285's policy of treating plaintiffs and defendants equally. Instead, the Federal Circuit adopted a standard designed to favor plaintiffs.

That is precisely what the Federal Circuit's standard does in practice. The Federal Circuit ordinarily will not permit fees to be imposed *on a defendant* unless it *willfully infringed* the patent. See *In re Seagate Tech., LLC*, 497 F.3d 1360, 1371 (Fed. Cir. 2007) (en banc). According to the Federal Circuit, "willful infringement" comprises an objective element and a subjective element, and each element is purportedly equivalent to the corresponding

prong of the *Brooks Furniture* test. But that equivalence breaks down under scrutiny. Each of the prongs of the willful infringement test in practice requires patentees to meet a much less stringent standard to obtain a fee award. See Pet. Br. 28-29.

Plaintiffs and defendants also face radically different consequences from patent litigation. Patentees asserting baseless claims risk, at most, a fee award. If the (lower) standard of willful infringement is met, defendants face not merely a fee award but enhanced damages, up to a treble damages award, as well. See 35 U.S.C. §§284-285. The prevailing plaintiff thus is offered a pot of gold at the end of the rainbow; but the "prevailing defendant who has been wrongfully charged" is offered only the possible "recovery of attorney fees." *Scotch Whisky Ass'n* v. *Majestic Distilling Co.*, 958 F.2d 594, 600 (4th Cir. 1992).

That unequal standard undermines important interests. As this Court explained in the copyright context:

> Because copyright law ultimately serves the purpose of enriching the general public through access to creative works, it is peculiarly important that the boundaries of copyright law be demarcated as clearly as possible. To that end, defendants who seek to advance a variety of meritorious copyright defenses should be encouraged to litigate them to the same extent that plaintiffs are encouraged to litigate meritorious claims of infringement.

Fogerty, 510 U.S. at 527. That same interest is present here: Parties accused of infringement with plausible defenses should be encouraged to litigate and thereby spare the public the burden of repeat lawsuits based on overly broad constructions or potentially invalid patents. A ruling that narrows a patent's scope or invalidates the patent does not accrue merely to the benefit of the defen-

dant who obtains it. It clears the patent out of the way of other innovators, who may claim the benefit of the ruling despite not having been party to the suit. See *Blonder-Tongue Labs., Inc.* v. *Univ. of Ill. Found.*, 402 U.S. 313 (1971).

This Court has repeatedly encouraged meritorious challenges to weak patents, removing unwarranted barriers to potential defendants seeking to have a patent declared invalid. For example, the Court rejected the Federal Circuit's rigid "teaching, suggestion, or motivation" test and provided lower courts more flexibility in finding patents obvious under §103 of the Patent Act. *KSR Int'l Co.* v. *Teleflex Inc.*, 550 U.S. 398 (2007). A party may challenge the validity of a patent it has licensed without first repudiating the license. *MedImmune, Inc.* v. *Genentech, Inc.*, 549 U.S. 118 (2007). The Court should likewise clear away the Federal Circuit's overly restrictive reading of §285, so defendants will once again have an incentive to defend, and obtain fees, in appropriate cases.

Providing an appropriate incentive to defend is particularly critical when the defendant contests validity based on prior art. Because examiners at the PTO face a mountainous backlog of patent applications,[5] overburdened examiners may not have the ability to conduct a time-consuming and resource-intensive search for invalidating prior art. Instead, our patent system leaves that task to private litigants, who "may often be the only individuals with enough economic incentive to challenge the patentability of an inventor's discovery." *Lear, Inc.* v.

---

[5] See U.S.P.T.O., *Performance and Accountability Report, FY 2012* at 176-177 (2012), http://www.uspto.gov/about/stratplan/ar/USPTOFY2012PAR.pdf (565,566 patent applications filed in fiscal year 2012, contributing to cumulative backlog of 1.16 million pending applications).

Adkins, 395 U.S. 653, 670 (1969). An overly stringent application of §285 threatens the incentive for defendants to fulfill that important role.

B. Flexibility Is Needed To Deter Plaintiffs From Externalizing Costs

Patent infringement litigation imposes enormous costs on defendants. Not only does it require expensive outlays to present a defense. It also redirects corporate officers, key technical innovators, and other critical company employees from their focus on innovation and customer service to the business of litigation. The Federal Circuit's rigid approach to fees does little to prevent or even moderate those costs, and much to exacerbate them.

1. Patent Litigation Is Extraordinarily Costly

In 2012, 5,778 patent cases were filed in federal district courts against 12,627 named defendants. See Patstats, *U.S. Patent Litigation Statistics* (Sept. 18, 2013), http://patstats.org/Patstats3.html. For defendants, getting to judgment on the merits is a costly proposition. One study concluded that average legal costs in 2011—fees paid to "outside counsel (lead and local), experts, discovery costs, prior art searching, jury consultants, graphics, other expenses, and other related costs"—were roughly $1.5 million per defense for large companies and $420,000 for small/medium companies. James Bessen & Michael J. Meurer, *The Direct Costs from NPE Disputes*, B.U. School of Law Working Paper No. 12-34, at 12 (June 28, 2012). A survey conducted by the American Intellectual Property Law Association indicated that, for infringement cases involving potential damages of $1 million to $25 million, the mean cost of defense is $1.6 million through discovery and $2.8 million through trial. *Id.* at 14 n.15, tbl. 2 (reporting results). For cases involving amounts in controversy exceeding $25 million, the mean

costs of defending through discovery and trial are $3.6 million and $6 million, respectively. *Ibid.*

Companies accused of patent infringement have little prospect of ending a case with a motion to dismiss. Threadbare allegations are often sufficient.[6] And "demonstrating entitlement to summary judgment in a patent case tends to be particularly difficult because patent disputes are generally very fact intensive." *Schoenhaus* v. *Genesco, Inc.*, 351 F. Supp. 2d 320, 323 (E.D. Pa. 2005), *aff'd*, 440 F.3d 1354 (Fed. Cir. 2006).

Even getting to summary judgment can require years of litigation, with significant outlays of monetary and other resources. "Patent infringement analysis involves two steps: the threshold construction of the meaning and scope of the asserted claim, followed by the determination whether the accused product infringes the properly construed claim." *Athletic Alts., Inc.* v. *Prince Mfg., Inc.*, 73 F.3d 1573, 1578 (Fed. Cir. 1996). Accused infringers thus must litigate the meaning of the claims; endure extensive and often overly broad discovery about their products; and litigate the degree to which the patentee's claims map onto their products. Prior art searches related to validity can cost hundreds of thousands of dollars. Local rules may impose additional burdens, requiring invalidity contentions, infringement and non-infringement contentions, and other exacting work prod-

---

[6] For example, a plaintiff is excused from (1) "specifically includ[ing] each element of the claims of the asserted patent" in its complaint, *Phonometrics, Inc.* v. *Hospitality Franchise Sys., Inc.*, 203 F.3d 790, 794 (Fed. Cir. 2000), (2) "identify[ing] an accused device by name," *K-Tech Telecomm., Inc.* v. *Time Warner Cable, Inc.*, 714 F.3d 1277, 1286 (Fed. Cir. 2013), and (3) alleging "what device" purportedly infringed the asserted patent or "what mechanism" or "means" the defendant allegedly used in infringing, *McZeal* v. *Sprint Nextel Corp.*, 501 F.3d 1354, 1357-1358 (Fed. Cir. 2007).

uct before accused infringers can even seek a decision on the merits. See, *e.g.*, E.D. Tex. Pat. R. 3-1 to -4, 4-1 to -4; N.D. Ill. Pat. R. 2.3-2.5, 3.1-3.3, 4; D.N.J. Pat. R. 3.2A-3.4, 4.

One study found that, in 1995, obtaining summary judgment on invalidity required an average of 714 days and 187 filings with the court. Jay P. Kesan & Gwendolyn G. Ball, *How Are Patent Cases Resolved? An Empirical Examination of the Adjudication and Settlement of Patent Disputes*, 84 Wash. U. L. Rev. 237, 310 (2006). By 2000, those numbers increased to 874 days and 221 filings. *Ibid.* In the meantime, companies accused of infringement endure years of document gathering and production, employee depositions, and other distractions from their operational activities—not to mention the ongoing potential for disruption to vendor and customer relationships that can result from an infringement claim and the attendant threat of an injunction. James Bessen & Michael J. Meurer, *The Private Costs of Patent Litigation*, 9 J.L. Econ. & Pol'y 59, 60 (2012); James Bessen *et al.*, *The Private and Social Costs of Patent Trolls*, 34 Regulation 26, 31 (2011-2012); see also *eBay*, 547 U.S. at 396 (Kennedy, J., concurring) ("[A]n injunction * * * can be employed as a bargaining tool to charge exorbitant fees to companies that seek to buy licenses to practice the patent."). For those reasons, litigation of this sort deters investments in innovation. Products frequently "require customers to make complementary investments; they may not be willing to make these investments if a lawsuit poses some risk that the product will be withdrawn from the market." Bessen *et al.*, *The Private and Social Costs of Patent Trolls*, *supra*, at 31.

2. *The Federal Circuit's Standard Encourages Marginal Claims And Aggressive Strategies*

Those large costs, and the uneven consequences that plaintiffs and defendants confront, give plaintiffs strong incentives to bet on weak claims, and defendants insufficient incentives to resist. See Kesan & Ball, *supra*, at 312. One study found that, from 1995 to 2000, "approximately 80% of patent cases settle[d]." *Id.* at 259. A later study of cases filed between 2000 and 2009 found that 84% of cases involving "once-litigated" patents (defined as those that had been litigated previously once before) ended up settling; for the "most-litigated patents" (defined as patents asserted in eight or more lawsuits during the study's period), 90.5% of the cases ended in settlement. John R. Allison *et al.*, *Patent Quality and Settlement Among Repeat Patent Litigants*, 99 Geo. L. J. 677, 689 (2011). By contrast, when claims asserted on the basis of the most-litigated patents reached judgment on the merits, those claims succeeded only 10.7% of the time, compared to a success rate of 26% across all patent lawsuits and 47.3% for once-litigated patents. *Id.* at 687. These data suggest that a typical patent settlement payment represents "not the acquisition of real legal rights but a nuisance settlement over a likely invalid patent." *Id.* at 709.

In *amici*'s experience, the current system provides plaintiffs with little reason not to bring weak suits—and little reason to hold the costs of litigation down. For example, many *amici* have been sued under a patent with a narrow written description that is clearly different from the products that *amici* sell. But the plaintiff has little reason to refrain from suing so long as it can find a broad claim term and use that to assert infringement. See *Boss Control, Inc.* v. *Bombardier Inc.*, 410 F.3d 1372, 1379

(Fed. Cir. 2005). Similarly, other *amici* have been charged with infringement even though their product plainly predates the priority date of the patent-in-suit. But the plaintiff again has little reason to hold back so long as it has some chance, however remote, of overcoming that barrier—or at least a hope that the costs of litigation will deter the defendant from litigating its defense to conclusion. Under the Federal Circuit's current exceptional-case standard, an alleged infringer would have little chance to recover fees even after successfully defending against such marginal suits.

The current standard also leads to unduly aggressive tactics. Patentees often assert "scores, or even hundreds," of claims at the outset of the case. Douglas A. Cawley, *District Court Patent Case Management Post-AIA*, 14 Sedona Conf. J. 77, 84-85 (2013). They assert infringement against hundreds of products, some never identified in the complaint. And they will often resist narrowing their suit at the outset, or until after discovery, when the case is relatively close to trial. *Ibid.*; see also *In re Katz Interactive Call Processing Patent Litig.*, 639 F.3d 1303, 1313 n.9 (Fed. Cir. 2011) (patentee asserted 1,975 claims and only reduced to 40 after discovery and upon order of trial court). That forces defendants to comb through their records and identify products, make non-infringement contentions for each product, and litigate and whittle down the claims. Under the current standard, however, a fee award is essentially off-limits unless the claim of infringement was both asserted in bad faith and objectively baseless. Properly construed, § 285 should allow district courts to require losing plaintiffs to internalize the costs of such strategic decisions in appropriate circumstances. See pp. 15-16, *supra*.

The public also pays the price when the high costs of defense allow junk patents to proliferate. The current system provides courts with few opportunities to invalidate bad patents (or to limit valid patents to their proper scope). That "create[s] an environment in which incorrectly issued patents survive in the market." Jay P. Kesan & Andres A. Gallo, *Why "Bad" Patents Survive in the Market and How Should We Change?*, 55 Emory L.J. 61, 85 (2006). The persistence of low-quality patents contributes to problems such as patent thickets, or "dense web[s] of overlapping intellectual property rights that a company must hack its way through in order to actually commercialize new technology." Carl Shapiro, *Navigating the Patent Thicket: Cross Licenses, Patent Pools, and Standard Setting*, in *Innovation Policy & the Economy* 119, 120 (A.B. Jaffe *et al.*, ed. 2001). Thickets of dubious patents can stifle innovation and deter new market entrants. Bronwyn Hall *et al.*, *A Study of Patent Thickets* 53 (Nat'l Inst. of Econ. & Soc. Res. 2012).

Those adverse consequences are exacerbated by the rise of firms that "use patents not as a basis for producing and selling goods but, instead, primarily for obtaining licensing fees." *eBay*, 547 U.S. at 396 (Kennedy, J., concurring). Unlike *amici*, such firms do not have commercial activities that can be disrupted by litigation; instead, litigation (and the threat of litigation) is central to their business. They do not have mountainous files about their products that must be produced; rather, they have no products and often will have few documents. They do not have to do expensive prior art searches; only defendants do that. And their officers and key technical employees are not distracted from their central goal—creating quality products and services for the public—to manage liti-

gation instead. Litigation for them is not a distracting cost of business; it is their business.

Certainly, many repeat patent litigants (including *amici*) have real products and productive business operations. But in the years since *Brooks Furniture*, there has been an explosion of litigation by non-practicing entities that benefit from the asymmetrical incentives embedded in the Federal Circuit's current standard for fee shifting. Whereas suits brought by such litigants accounted for less than a fifth of all patent cases a decade ago, they now account for 62%.[7]

C. This Court Should Restore § 285 To Its Intended Scope So That It Can Serve Its Intended Purpose

"The only protection that parties in [defendants'] position have against abusive and frivolous litigation * * * is an award of counsel fees to the unjustly accused infringer." *Abraskin* v. *Entrecap Corp.*, 55 F. Supp. 2d 224, 229 (S.D.N.Y. 1999). But § 285 no longer serves that purpose. "Many patent suits are brought these days with little chance of success." *Medtronic Navigation, Inc.* v. *BrainLAB Medizinische Computersysteme GmbH*, 603 F.3d 943, 967 (Fed. Cir. 2010) (Lourie, J., concurring). As long as plaintiffs can take comfort in the Federal Circuit's excessively demanding bad-faith/objective-baselessness standard, they can pursue marginal claims and aggressive litigation postures with little risk. Only a vanishing fraction of patent cases—approximately 0.6% in 2011—see any kind of fee-shifting. See Hon. Randall R. Rader *et al.*, *Make Patent Trolls Pay in Court*, The New York Times, June 4, 2013 at A25.

---

[7] Colleen V. Chien, *Patent Trolls by the Numbers*, Patently-O Blog, http://www.patentlyo.com/patent/2013/03/chien-patent-trolls.html.

Restoring §285 to its proper scope and flexibility would help strike a more sensible balance. It would give plaintiffs that bring sufficiently weak cases, or that externalize unnecessary costs on defendants, or that engage in conduct that otherwise makes the case "exceptional," reason to think twice before doing so. The risk of having to pay the defendant's fees—to avoid injustice—lowers the expected return for would-be plaintiffs, imposes downside risk, and encourages more balanced conduct. Colleen V. Chien, *Reforming Software Patents*, 50 Hou. L. Rev. 325, 369-374 (2012). It would also "discourage cases that are brought only to obtain revenue from litigation avoidance instincts." Hon. Randall R. Rader, *The State of Patent Litigation*, 21 Fed. Cir. B. J. 331, 344 (2012). "[T]he prospect of paying fees will discourage aggressive suits and frivolous demands." Rader *et al.*, *Make Patent Trolls Pay*, *supra*, at A25.

A properly balanced approach to §285 would also give defendants incentives to litigate when appropriate. A defendant that has a realistic chance of recovering some of its costs through a fee award is more likely to fight to judgment. David Rosenberg & Steven Shavell, *A Model in Which Suits Are Brought for Their Nuisance Value*, 5 Int'l Rev. L. & Econ. 3, 4 (1985); Chien, *Reforming Software Patents*, *supra*, at 372. Doing so would improve patent quality. Defendants currently have incentives to settle even if the patent is weak. But giving defendants an incentive to fight to judgment would help "cull" weak patents—invalidating them or restricting their scope—so they can no longer be used to keep innovative products out of the market or extract tribute from would-be innovators. In light of those important considerations, Congress provided a properly balanced approach in the flexible standard set forth in §285 itself. The Federal Circuit

upset the balance by substituting a rigid two-prong test for the standard Congress provided.

III. District Court Exceptional-Case Determinations Should Be Reviewed For Abuse Of Discretion

The pernicious effects of *Brooks Furniture* have been magnified by the Federal Circuit's refusal to accord district courts the deference that, under § 285, is their due.

A. Section 285's Text And History Support Review Under An Abuse-Of-Discretion Standard

Section 285 provides that district courts "may" award fees in exceptional cases. The term "may" by itself indicates that Congress intended to vest district courts with discretion. See *Rodgers*, 461 U.S. at 706 ("The word 'may,' when used in a statute, usually implies some degree of discretion."); see also *eBay*, 547 U.S. at 392 (district court decision to issue injunction under the Patent Act reviewed for abuse of discretion in part because the Act "expressly provides that injunctions 'may' issue 'in accordance with the principles of equity' "); p. 8, *supra*.

Section 285's origins make that conclusion unavoidable. Courts interpreting § 285's predecessor repeatedly emphasized the district court's discretion. *E.g.*, *Algren Watch Findings Co.* v. *Kalinsky*, 197 F.2d 69, 72 (2d Cir. 1952); *Turchan* v. *Cincinnati Milling Mach. Co.*, 208 F.2d 228, 229 (6th Cir. 1953). Courts interpreting § 285 before the Federal Circuit's creation did so as well. Time and again they reviewed district court fee-shifting decisions for abuse of discretion. See, *e.g.*, *Specmade Prods., Inc.* v. *Barnett*, 354 F.2d 229, 230 (5th Cir. 1966); *Campbell* v. *Spectrum Automation Co.*, 601 F.2d 246, 252 (6th Cir. 1979). Before *Highmark*, even the Federal Circuit reviewed a district court's "determin[ation] whether attorney fees are appropriate * * * for an abuse of discre-

tion." *Cybor Corp.* v. *FAS Techs., Inc.*, 138 F.3d 1448, 1460 (Fed. Cir. 1998) (en banc).[8] There is no reason to depart from that longstanding practice—and every reason not to.

B. This Court's Precedents Support Abuse-Of-Discretion Review

In *Cooter & Gell* v. *Hartmarx Corp.*, 496 U.S. 384 (1990), this Court addressed "the appropriate standard of appellate review of a district court's imposition of Rule 11 sanctions." *Id.* at 388. "Determining whether an attorney has violated Rule 11 involves a consideration of three types of issues." *Id.* at 399. "The court must consider factual questions regarding the nature of the attorney's prefiling inquiry and the factual basis of the pleading or other paper." *Ibid.* "Legal issues are raised in considering whether a pleading is 'warranted by existing law or a good faith argument' for changing the law and whether the attorney's conduct violated Rule 11." *Ibid.* And a court must "exercise its discretion to tailor an 'appropriate sanction.'" *Ibid.*

This Court concluded that "an appellate court should apply an abuse-of-discretion standard in reviewing *all*

---

[8] Before *Highmark*, the Federal Circuit stated that "[t]he determination of whether a case is exceptional and, thus, eligible for an award of attorney fees under § 285 is a two-step process." *Cybor Corp.*, 138 F.3d at 1460. First, "the district court must determine whether a case is exceptional, a factual determination reviewed for clear error." *Ibid.* Second, "[a]fter determining that a case is exceptional, the district court must determine whether attorney fees are appropriate, a determination that [the Federal Circuit] review[ed] for an abuse of discretion." *Ibid.* Both steps involved abuse-of-discretion review or its equivalent: "A district court abuses its discretion when its decision is based on *clearly erroneous findings of fact*, is based on erroneous interpretations of the law, or is clearly unreasonable, arbitrary or fanciful." *Ibid.* (emphasis added).

aspects of a district court's Rule 11 determination." 496 U.S. at 405 (emphasis added). It explained that, "[w]hen an appellate court reviews a district court's factual findings, the abuse of discretion and clearly erroneous standards are indistinguishable: A court of appeals would be justified in concluding that a district court had abused its discretion in making a factual finding only if the finding were clearly erroneous." *Id.* at 401. Otherwise, an appellate court should defer to those findings. The Court also "noted the difficulty of distinguishing between legal and factual issues." *Ibid.* Such an inquiry is "particularly difficult in the Rule 11 context" because a court must consider legal issues "rooted in factual determinations" that require a court to "consider all the circumstances of a case." *Ibid.* Two years earlier, the Court likewise held that fee awards under the Equal Access to Justice Act are reviewed for abuse of discretion. *Pierce* v. *Underwood*, 487 U.S. 552, 557-563 (1988).

For the same reasons, the abuse-of-discretion standard should apply to a district court's exceptional-case determination, regardless of the standard the district court uses. The district court is "better positioned" than an appellate court to make any legal determinations rooted in questions of fact. *Cooter & Gell*, 496 U.S. at 403. "District court judges live with these cases, often for many years," making them "better situated to review the evidence, hear the testimony and evaluate the parties' conduct, behavior, and positions in the litigation." No. 12-1163, Pet. App. 200a (Moore, J., dissenting from denial of petition for rehearing en banc).

The abuse-of-discretion standard, moreover, is consistent with other areas of the law where a district court's "special vantage point," *White* v. *Regester*, 412 U.S. 755, 769 (1973), counsels appellate restraint. For example,

the Lanham Act's fee-shifting provision is identical to §285. See 15 U.S.C. §1117(a)(3). Courts of appeals almost unanimously agree that a district court's decision under that provision should be reviewed for abuse of discretion.[9] The abuse-of-discretion standard regularly applies whenever—as with §285—a district court is supposed to "tak[e] all of the facts and circumstances into account." *FilmTec Corp.* v. *Hydranautics*, 67 F.3d 931, 938 (Fed. Cir. 1995); see, *e.g.*, *Gall* v. *United States*, 552 U.S. 38, 46 (2007) ("[T]he familiar abuse-of-discretion standard of review now applies to appellate review of sentencing decisions."); *Evans* v. *Jeff D.*, 475 U.S. 717, 742 (1986) ("[W]e shall rely primarily on the sound discretion of the district courts to appraise the reasonableness of particular class-action settlements on a case-by-case basis, in the light of all the relevant circumstances."); *Doran* v. *Salem Inn, Inc.*, 422 U.S. 922, 931-932 (1975) ("[T]he standard of appellate review is simply whether the issuance of the [preliminary] injunction, in the light of the applicable standard, constituted an abuse of discretion."). The same result is warranted here.

---

[9] *Int'l Star Class Yacht Racing Ass'n* v. *Tommy Hilfiger, U.S.A., Inc.*, 80 F.3d 749, 752 (2d Cir. 1996); *Securacomm Consulting, Inc.* v. *Securacom Inc.*, 224 F.3d 273, 279 (3d Cir. 2000); *Newport News Holdings Corp.* v. *Virtual City Vision, Inc.*, 650 F.3d 423, 441 (4th Cir. 2011), *cert. denied*, 132 S. Ct. 575 (2011); *Nat'l Bus. Forms & Printing, Inc.* v. *Ford Motor Co.*, 671 F.3d 526, 537 (5th Cir. 2012); *Johnson* v. *Jones*, 149 F.3d 494, 503 (6th Cir. 1998); *BASF Corp.* v. *Old World Trading Co.*, 41 F.3d 1081, 1099 (7th Cir. 1994); *Blue Dane Simmental Corp.* v. *Am. Simmental Ass'n*, 178 F.3d 1035, 1043 (8th Cir. 1999); *Nat'l Ass'n of Prof'l Baseball Leagues, Inc.* v. *Very Minor Leagues, Inc.*, 223 F.3d 1143, 1146 (10th Cir. 2000); *Tire Kingdom, Inc.* v. *Morgan Tire & Auto, Inc.*, 253 F.3d 1332, 1336 (11th Cir. 2001); *ALPO Petfoods, Inc.* v. *Ralston Purina Co.*, 913 F.2d 958, 971 (D.C. Cir. 1990). But see *Secalt S.A.* v. *Wuxi Shenxi Constr. Mach. Co.*, 668 F.3d 677, 687 (9th Cir. 2012).

CONCLUSION

The judgments of the Federal Circuit should be reversed.

Respectfully submitted.

JOHN M. WHEALAN
4613 Merivale Rd.
Chevy Chase, MD 20815
(202) 994-2195
Counsel for Amici Curiae

KEVIN T. KRAMER
Deputy General Counsel – Intellectual Property
YAHOO! INC.
701 First Ave.
Sunnyvale, CA 94089
Counsel for Yahoo! Inc.

LUKE DOHMEN
Chief Patent Counsel
BOSTON SCIENTIFIC CORP.
1 Scimed Place
Maple Grove, MN 55311
Counsel for Boston Scientific Corp.

KRISHNENDU GUPTA
Senior Vice President, Deputy General Counsel
EMC CORPORATION
176 South Street
Hopkinton, MA 01748
Counsel for EMC Corporation

JEFFREY A. LAMKEN
Counsel of Record
MARTIN V. TOTARO
MOLOLAMKEN LLP
The Watergate, Suite 660
600 New Hampshire Ave., NW
Washington, D.C. 20037
(202) 556-2000
jlamken@mololamken.com
Counsel for Amici Curiae

DOUGLAS LUFTMAN
Vice President, Innovation Services & Chief Intellectual Property Counsel
NETAPP, INC.
495 East Java Drive
Sunnyvale, CA 94089
Counsel for NetApp, Inc.

DAVID E. MCCRAW
Vice President & Assistant General Counsel
THE NEW YORK TIMES COMPANY
620 Eighth Avenue
New York, NY 10018
Counsel for The New York Times Company

CHAD HANSON, PH.D.
Senior Legal Counsel, IP Litigation
MEDTRONIC, INC.
710 Medtronic Parkway
LC300
Minneapolis, MN 55432
Counsel for Medtronic, Inc.

WILLIAM D. MILLER
Chief Intellectual Property Counsel
GENERAL MILLS, INC.
Number One General Mills Boulevard
Minneapolis, MN 55426
Counsel for General Mills, Inc.

DECEMBER 2013

APPENDIX

APPENDIX A
LIST OF *AMICI CURIAE*

Yahoo! Inc. ("Yahoo") is a global technology company with over 12,000 employees focused on making the world's daily habits inspiring and entertaining. It provides a variety of products and services, many of them personalized, including search, content, and communications tools on the Web and on mobile devices. Between 2010 and 2012 alone, Yahoo spent more than $2.8 billion developing new technology. See Yahoo! Inc. *Annual Report (Form 10K)*, at 9 (Feb. 28, 2013), http://www.sec.gov/Archives/edgar/data/1011006/000119312513085111/d442073d10k.htm#tx4420731. As the result of investing so heavily in research and innovation, Yahoo owns a valuable patent portfolio; it licenses a great many patented technologies as well.

The New York Times Company is a leading global, multimedia news and information company. It operates newspapers, runs digital businesses, and invests in paper mills. It has approximately 5,363 full-time employees. It depends on intellectual property to protect its brands, content, services, and internally developed technology. See The New York Times Co., *Annual Report (Form 10-K)*, at 12 (Feb. 28, 2013), http://investors.nytco.com/files/doc_financials/annual/2012NYTannual.pdf.

NetApp is a Fortune® 500 company that creates innovative storage and data management solutions and services that deliver outstanding cost efficiency and accelerate business breakthroughs. The world's leading companies rely on its solutions to achieve better economics, speed, and scale of business. Enterprises, midsize businesses, government organizations, and service providers deploying business applications, cloud, and shared virtualized solutions turn to NetApp for efficient and flexible

infrastructures. NetApp also is widely recognized for its 20-year tradition of innovation, including as one of the "World's Most Innovative Companies" (Forbes), a top 300 United States patent holder (Intellectual Property Owners Association), Top 25 largest patent holders in the Silicon Valley region (San Francisco Business Times) and the best "Quality Over Quantity" patent portfolio in its industry (IEEE Spectrum). See NetApp, *Thought Leadership*, http://www.netapp.com/us/company/leadership/index.aspx.

Medtronic, Inc. is the world's largest medical technology company. With over 46,000 employees, Medtronic has transformed healthcare worldwide, improving outcomes, expanding access, and enhancing value. Medtronic is a leading innovator in the field, and capitalizes on the intellectual property it generates. In fiscal year 2012, Medtronic filed 770 original patent applications in the United States. See Medtronic, *Collaborative Culture of Innovation*, http://www.citizenshipreport.medtronic.com/collaborative-culture-of-innovation/intellectual-property/index.htm.

General Mills, Inc. is one of the world's leading food companies, operating in more than 100 countries around the world. Its brands include Cheerios, Fiber One, Häagen-Dazs, Nature Valley, Yoplait, Betty Crocker, Pillsbury, Green Giant, Old El Paso, Wanchai Ferry, Yoki, and more. Headquartered in Minneapolis, Minnesota, General Mills had fiscal 2013 worldwide sales of $17.8 billion.

EMC Corporation is a global leader in cloud computing. It helps IT departments to store, manage, protect, and analyze information. EMC employs approximately 60,000 people worldwide. EMC invests substantially in

research and development—approximately $16.5 billion since 2003. EMC is supported by thousands of technical research and development employees, who help generate the industry's broadest portfolio of systems, software, and services. EMC, *EMC at a Glance*, http://www.emc.com/corporate/emc-at-glance/corporate-profile/index.htm.

Boston Scientific Corporation is a worldwide developer, manufacturer, and marketer of medical devices that are used in a broad range of interventional medical specialties. Founded in 1979, Boston Scientific currently has approximately 24,000 employees worldwide. Boston Scientific relies on patents to protect its intellectual property. As of December 31, 2012, Boston Scientific had more than 15,000 patents worldwide. See Boston Scientific Corp., *Annual Report (Form 10-K)*, at 13 (Feb. 22, 2013), http://www.sec.gov/Archives/edgar/data/885725/000088572513000007/a2012form10k.htm.